# HAAS SERVICE AND OPERATOR MANUAL ARCHIVE

## Electrical Service Manual 96-0284D RevD June 2011 English

- This content is for illustrative purposes.
- Historic machine Service Manuals are posted here to provide information for Haas machine owners.
- Publications are intended for use only with machines built at the time of original publication.
- As machine designs change the content of these publications can become obsolete.
- You should not do mechanical or electrical machine repairs or service procedures unless you are qualified and knowledgeable about the processes.
- Only authorized personnel with the proper training and certification should do many repair procedures.

**WARNING: Some mechanical and electrical service procedures can be extremely dangerous or life-threatening.
Know your skill level and abilities.**

**All information herein is provided as a courtesy for Haas machine owners for reference and illustrative purposes only. Haas Automation cannot be held responsible for repairs you perform. Only those services and repairs that are provided by authorized Haas Factory Outlet distributors are guaranteed.**

**Only an authorized Haas Factory Outlet distributor should service or repair a Haas machine that is protected by the original factory warranty. Servicing by any other party automatically voids the factory warranty.**

Haas Automation Inc.

# Mill and Lathe Service Manual

## Electrical Components

## Machine Installation

June 2011

96-0284D

**Haas Automation Inc.**
2800 Sturgis Road, Oxnard CA 93030
Tel. 888-817-4227 I Fax 805-278-8561
www.HaasCNC.com

# Table of Contents

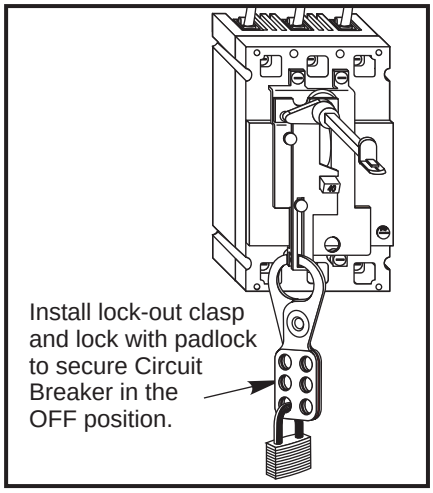


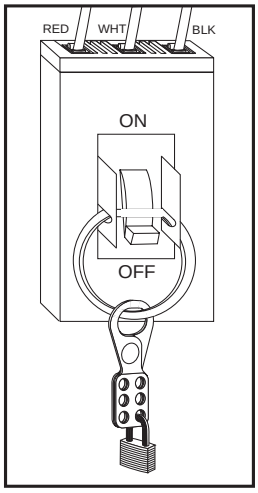


To avoid possible shock, make sure circuit breakers are appropriately locked off before attempting any electrical work.

**CAUTION!** Working with the electrical services required for the machine can be extremely hazardous. The electrical power must be off and steps must be taken to ensure that it will not be turned on while you are working with it. In most cases this means turning off a circuit breaker in a panel and then locking the panel door. However, if your connection is different or you are not sure how to do this, check with the appropriate personnel in your organization or otherwise obtain the necessary help before you continue.

**WARNING!**

**The electrical panel should be closed and the three screws/latches on the door should be secured at all times except during installation and service. At those times, only qualified electricians should have access to the panel. When the main circuit breaker is on, there is high voltage throughout the electrical panel (including the circuit boards and logic circuits) and some components operate at high temperatures. Therefore extreme caution is required.**

## Circuit Breaker Warning

Do not reset a circuit breaker until the reason for the fault is investigated. Only Haas-trained service personnel should troubleshoot and repair the equipment.

## Machine Not Running

### Machine cannot be powered on.

• Check input voltage to machine.

• Check main circuit breaker at top right of electrical cabinet; switch must be at the on position.

• Check overvoltage fuses.

• Check wiring to Power Off button on front control panel.

• Check wiring to Auto Off relay to I/O PCB.

• Check connection between 24V transformer (T5) and K1 contactor.

• Check 24V transformer (T5) bracket has jumper in correct position (measure voltage at main circuit breaker and connect jumper to corresponding connector on T5 transformer bracket).

• Check I/O PCB.

• Check Power PCB.

### Machine can be powered on, but turns off by itself.

• Check Settings #1 and #2 for Auto Off Timer or Off at M30.

• Check alarm history for Overvoltage or Overheat shutdown.

• Check AC power supply lines for intermittent supply.

• Check low voltage power supply for intermittent supply.

• Check wiring to Power Off button on front control panel.

• Check connection between 24V transformer and K1 contactor.

• Check I/O PCB.

• Check Parameter 57 for Power off at E-Stop.

• Check MOTIF or MOCON PCB.

### Machine turns on, keyboard beeps, but no LCD/CRT display.

• Check for power connections to LCD/CRT from I/O PCB (LVPS power from Power PCB for 15” monitor). Check for green Power LED at front of CRT.

• Close doors and zero return machine (possible bad monitor).

• Check video cable from Video PCB to LCD/CRT.

• Check for lights on the processor.

• Replace LCD/CRT.

### Machine turns on, LCD works, but keyboard keys do not work.

• Check keyboard cable (700) from Video to SKBIF PCB.

• Check keypad.

• Check SKBIF PCB.

### Constant E-Stop Condition (will not reset) (Vertical Machines).

• Check hydraulic counterbalance pressure, low pressure switches, and cabling.

### Quad APC trouble shooting

The Quad APC uses an additional PC board to control pallets 3 and 4.

The pallet chain motor receives 160VDC from plug 6A on this board (32-3078A). The PC board receives power (115V) from the power card, which plugs into P4 on the APC board.

The solenoid for the left, air operated, automatic door plugs into P3; this cable is part of 33-6038A. Pallet 3 and 4 signals are sent through cable 33-1516, which plugs into P1. The cable's other end plugs into the I/O board P62.

## Electrical Alarm Troubleshooting

### Axis Drive Fault Alarm

• Blown amplifier - indicated by light at bottom of amplifier when power is on. Replace the fuse in the amplifier.

• Amplifier or MOCON is noise sensitive. If this is the case, the alarm can be cleared and the axis will run normally for a while.

To check an amplifier, switch the motor leads and control cables between the amplifier and the one next to it. If the same problem occurs with the other axis, the amplifier must be replaced. If the problem stays on the same axis, either the MOCON or control cable. The problem could also be the axis motor itself, with leads either shorted to each other or to ground.

• Amplifier faulting out for valid reason, such as overtemp, overvoltage, or +/-12V undervoltage condition. This usually results from running a servo intensive program, or unadjusted 12V power supply. Adjust voltage to correct specifications or replace the power supply.

Overvoltage could occur if regen load is not coming on, but this does not usually happen. The problem could also be the axis motor itself, with leads either shorted to each other or to ground.

### Axis Overload

• The fuse function built into the MOCON has been overloaded. This may be caused by a lot of motor accel/decels, or hitting a hard stop with the axis. This safety function protects the amplifier and motor. If the current program is the cause, change the program. If the axis hits a hard stop the travel limits may be set wrong.

### Phasing Error

• The MOCON did not receive the proper phasing information from the motors. **Do not reset** the machine if this alarm occurs. Power the machine down and back up. If the problem persists, it is probably a broken wire or faulty MOCON connectors. This problem could also be related to the Low Voltage Power Supply. Check to see if the LVPS is functioning properly.

### Servo Error Too Large

• This alarms occurs when the difference between the commanded axis position and the actual position becomes larger than the maximum that is set in the parameter.

This condition occurs when the amplifier is blown, is not receiving the commands, or the 320V power source is dead. If the MOCON is not sending the correct commands to the amplifier, it is probably due to a broken wire, or a Phasing Error that was generated.

### Axis Z Fault or Z Channel Missing

• During a self-test, the number of encoder counts was found to be incorrect. This is usually caused by a noisy environment, and not a bad encoder. Check all shields and grounds on the encoder cables and the motor leads that come into the amplifiers. An alarm for one axis can be caused by a bad grounding on the motor leads of another axis.

### Axis Cable Fault

• During self-test, encoder cable signals were found to be invalid. This alarm is usually caused by a bad cable, or a bad connection on the motor encoder connectors. Check the cable for any breaks, and the encoder connectors at the motor controller board. Machine noise can cause this alarm, although it is less common.

### Alarm 101, “MOCON Comm. Failure”

• During self-test of communications between the MOCON and main processor, the main processor does not respond, and is suspected to be dead. This alarm is generated and the servos are stopped. Check all ribbon cable connections, and all grounding. Machine noise can also cause this alarm, although it is less common.

### Alarm 157, MOCON Watchdog Fault

• The self-test of the MOCON has failed. Replace the MOCON.

### Alarm 212, Program Integrity Error/Alarm 250, Program Data Error

• If a program has been corrupted in the system or a corrupted program has been loaded into the machine, a Program Data Error (250) or Program Integrity Error (212) might occur. This occurrence can be recognized by an exclamation point (!) next to a program when turning to the list program page. Following is the common procedure to perform when this happens.

1. Save all programs to disk except the program with the exclamation point error signal. The exclamation point (!) indicates the program that is corrupt. This will be your back-up disk to reload the programs into the machine.

2. Delete all the programs. This should delete all the programs including the one with the “!” error signal.

3. If the program with the exclamation point (!) does not erase then the control needs to be initialized.

4. If the machine still has the program with the exclamation point or the control now refuses to load a good program, it may be necessary to clear memory and reload software.

5. If problem persists, replace main processor board.

### Alarm 261, Rotary CRC Error (Horiz & Vert)

This alarm is normally the result of an incomplete software installation. To correct this error:

1. Press Emergency Stop.
2. Turn Setting 7 to OFF.
3. Go to Setting 30 and select HRT210. Make note of this and all following changes.
4. Go to Parameter 43 and change the first bit from 0 to 1.
5. Go to setting 30 and select HRT310.
6. Go back to Parameter 43 and change the second bit from 0 to 1.
7. Now reverse the changes you have made.
8. Cycle power to the machine. The alarm will now be cleared.

If the alarm persists, repeat the above steps before calling for assistance.

### Alarm 354, Aux Axis Disconnected (Lathe)

When this alarm is generated, do not press **Reset**. Turn Setting 7 **Off**. Enter **Debug** mode, then view the Alarms/Messages page. On the Messages page, a code will appear similar to WO1. The list of codes and their descriptions follows:

**WO1** Power was just turned on or failed. Check the ribbon cables from the Aux Axis PCB to the processor for correct routing. Check for communication problems between the processor and the Aux Axis PCB.

**WO2** Servo following error too large. Check the encoder for contamination or dirt. Check for an intermittent connection at both ends of the motor cable.

**WO3** Emergency Stop. The E-STOP button was pressed, or an E-STOP condition occurred.

**WO4** High load. Check for binding in the tool changer gearbox and motor. Rotate the carousel by hand and feel for any binding. Make sure the toolholders are the correct weight.

**WO5** Remote RS-232 commanded off. Check the ribbon cable and the voltage to the Aux Axis PCB. Check for 115V AC (minimum) to the Aux Axis PCB from the main transformer. Check the fuse holder and the fuse that is protecting this circuit.

**WO6** Air or limit switch or motor overheat. Check that the motor is not hot. Check for any binding in the motor. Check for overweight tooling.

**WO7** Z channel fault. Either the encoder or the cable is bad. Change the encoder first, as it is easier to change than the cable. If the problem persists, change the cable.

**WO8** Over-current limit, stalled or PCB fault. Check for binding in the tool changer gearbox. Make sure the belt is not too tight. Ohm out the motor cable, checking pins G to F (should be open), G to H (should be open), and F to H (should read between 2.5 and 5 ohms). Check all the connections on the Aux Axis PCB and motor cable.

**WO9** Encode ES. Z channel is missing. Bad encoder or cable. See **WO7.**

**WOA** High voltage. Check the incoming voltage to the Aux Axis PCB. Incoming voltage must be 115V AC. See **WO5.**

**WOB** Cable fault. Check the cable from the motor to the Aux Axis PCB. Check for loose connections at each end.

## Line Voltage Adjustments

**Please read this section in its entirety before attempting to adjust the line voltage.**
**Tools Required:** Large flat tip screwdriver, Digital voltmeter

**NOTE:** The machine must have air pressure at the air gauge, or a "Low Air Pressure" alarm will be present on power up.

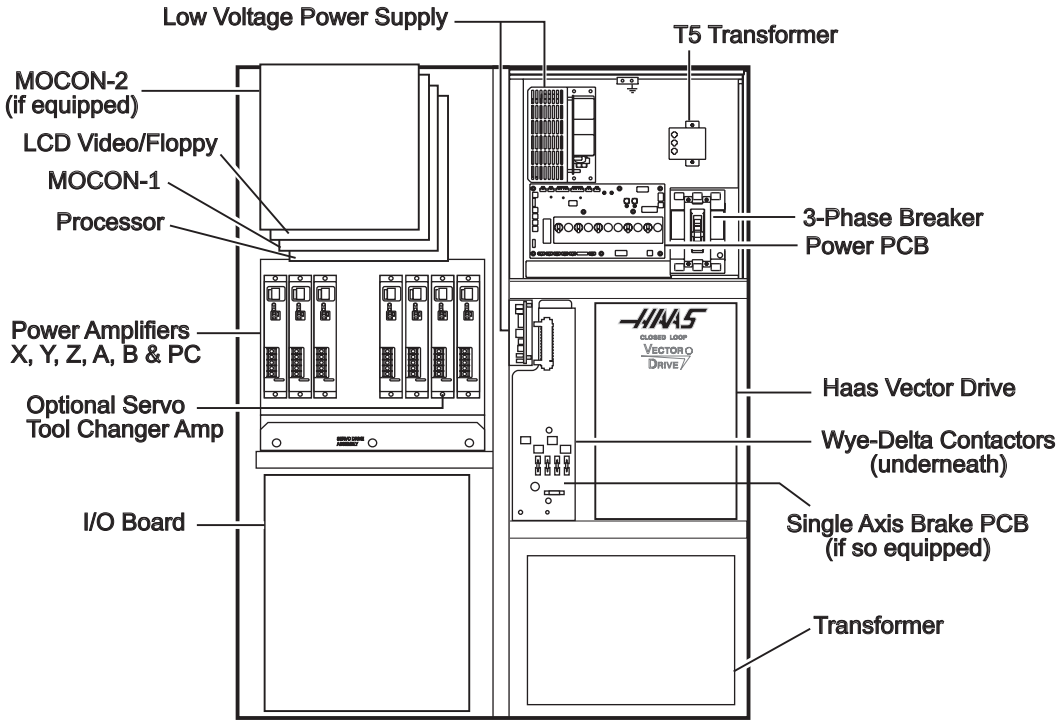


*Control Cabinet General Overview*

## Electrical Connections

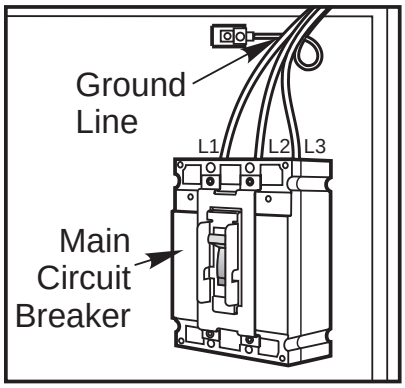


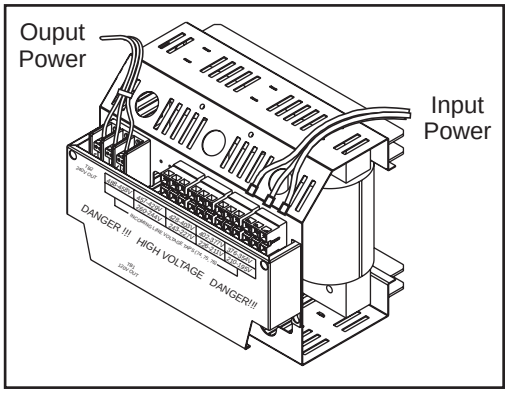


1. Place the main circuit breaker in the Off position and hook up the three power lines to the terminals on top of the main circuit breaker at the upper right-hand side of the electrical panel. Connect the separate ground line to the ground bus to the left of the terminals.

**NOTE:** Ensure service wires go into terminal-block clamps. (Do not miss clamp and tighten screw. Connection looks fine but machine runs poorly - servo overloads.) To check, pull on wires after screws are tightened.

2. After the line voltage is connected to the machine, make sure that main circuit breaker is off. Turn on the power at the source. Using an accurate digital voltmeter and appropriate safety procedures, measure the voltage between all three pair phases at the main circuit breaker and write down the readings. The voltage must be between 195 and 260V (360 and 480V for high voltage option).

**NOTE:** Wide voltage fluctuations are common in many industrial areas; you need to know the minimum and maximum voltage which will be supplied to the machine while it is in operation. U.S. National Electrical Code specifies that machines should operate with a variation of +5% to -5% around an average supply voltage. If problems with the line voltage occur, or low line voltage is suspected, an external transformer may be required. If you suspect voltage problems, the voltage should be checked every hour or two during a typical day to make sure that it does not fluctuate more than +5% or -5% from an average.

**CAUTION!** Make sure the main circuit breaker is set to off and the power is off at the supply panel before changing the transformer connections. Make sure that all three black wires are moved to the correct terminal block and are tight.

3. Check the connections on the transformer at the bottom-right corner of the rear cabinet. The three black wires labeled **74, 75,** and **76** must be moved to the terminal block triple which corresponds to the average voltage measured in **step 2** above. There are four positions for the input power for the 260V transformer and five positions for the 480V transformer. The labels showing the input voltage range for each terminal position are as shown in the previous illustration.

4. Transformer T5 supplies 24VAC used to power the main contactor. There are two versions of this transformer for use on 240 and 400V machines (32-0964B and 32-0965B, respectively). The 240V transformer has two input connectors located on the transformer bracket, which allow it to be connected to either a 221-240V range or 180 to 220V range. Users that have 180-240V input power should place the jumper on the appropriate connector.

The 400V transformer has three input connectors located on the transformer bracket, which allow it to be connected to either a 441-480V range, 381-440V range or 340-380V range. Users with the External High Voltage Option should place the jumper on the connector marked with the appropriate input voltage. Failure to place the jumper on the correct input connector will result in either overheating of the main contactor or failure to reliably engage the main contactor.

A jumper must also be placed on the plate covering the T5 transformer, Measure voltage at the main circuit breaker and connect the supplied shorting plug to the corresponding connector on the T5 transformer plate.

5. Set the main circuit breaker to ON and check for evidence of problems, such as the smell of overheating components or smoke. If such problems are indicated, immediately set the main circuit breaker to OFF and call the factory before proceeding.

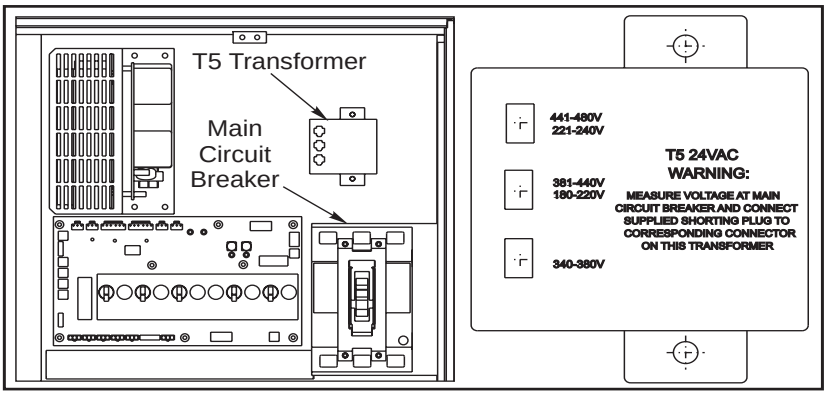


**WARNING!**

**Through the Spindle Coolant (TSC) pump is a three phase pump and must be phased correctly! Improper phasing will cause damage to the TSC pump and void the warranty. Refer to the TSC start up section if your machine is equipped with TSC.**

6. After the power is on, measure the voltage across the bottom terminals on the main circuit breaker. It should be the same as the measurements where the input power connects to the main circuit breaker. If there are any problems, check the wiring.

7. Apply power to the control by pressing the Power On switch on the front panel. Check the high voltage buss on the Vector Drive (pin 2 with respect to pin 3 on the terminal bus at the bottom of the drive). It must be between 310 and 360V. If the voltage is outside these limits, turn off the power and recheck steps 2 and 3. If the voltage is still outside these limits, call the factory. Next, check the DC voltage displayed in the second page of the Diagnostic data on the display screen. It is labeled DC BUS. Verify that the displayed voltage matches the voltage measured at pins 2 and 3 of the Vector Drive +/- 7V DC.

If the displayed voltage exceeds the measured voltage by 12 volts or more, install a ferrite EMI filter (64-1252) to the current command cable near its connection to the vector drive. Secure with a cable tie (See photo). Recheck voltage.

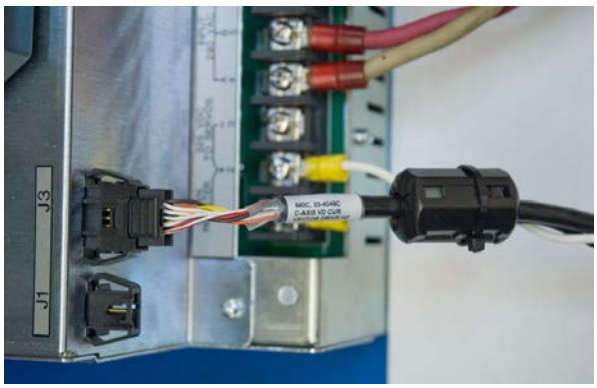

8. Electrical power must be phased properly to avoid damage to your equipment. The Power Supply Assembly PC board incorporates a “Phase Detect” circuit with neon indicators, shown below (disregard for single phase machines). When the orange neon is lit (NE5), the phasing is incorrect. If the green neon is lit (NE6), the phasing is correct. If both neon indicators are lit, you have a loose wire. Adjust phasing by placing the main circuit breaker in the Off position and swapping L1 and L2 of the incoming power lines at the main circuit breaker.

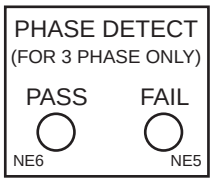


**WARNING!**

**All power must be turned off at the source prior to adjusting phasing.**

9. Close the door, lock the latches, and turn the power back on.

10. Remove the key from the control cabinet and give it to the shop manager.

## Fuse Replacement

**Please read this section in its entirety before attempting to replace any fuses.**

The Power PCB contains two ½-amp fuses located at the top right (FU1, FU3). If the machine is subject to a severe overvoltage or a lightning strike, these fuses may blow and turn off all power. Replace these fuses only with the same type and ratings.

**15” and Thin Pendant Machines**

| Size | Fuse Name | Type | Rating (amps) | Voltage | Location |
|---|---|---|---|---|---|
| 5x20mm | F1/F3 | Fast Acting | 1 | 250V | PSUP pcb, upper right |

## Overvoltage Fuses

**WARNING!**

**The electrical panel will have residual voltage, even after power has been shut off and/or disconnected . Never work inside this cabinet until the small green Power On light on the servo amplifiers (servo drive assembly on brush machines) goes out. The servo amplifiers/servo drive assembly is on the left side of the main control cabinet and about halfway down. This light(s) is at the top of the circuit card at the center of the assembly. Until this light goes out, there are dangerous voltages in the assembly even when power is shut off.**

1. Turn machine power off.

2. Place the main circuit breaker (upper right of electrical cabinet) in the off position.

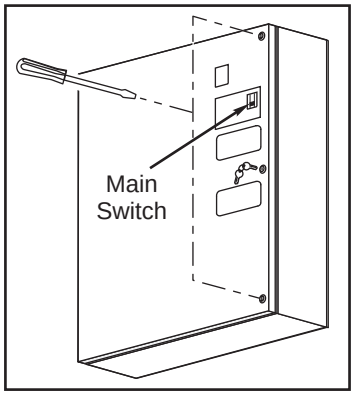


3. Open the cabinet door and wait until the red charge light on the servo drive assembly goes out before beginning any work inside the electrical cabinet.

4. The two overvoltage fuses are located beside each other at the upper right of the Power Supply board. An orange light will be on to indicate the blown fuse(s). If these fuses are blown, check incoming voltage to ensure it matches the jumper setting on T5.

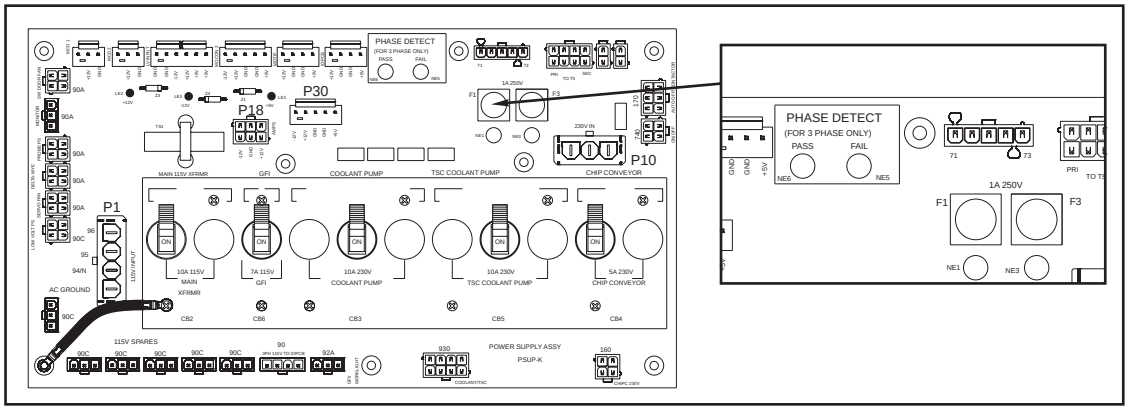


*Power Supply Board; Fuse Locations*

5. Using a flat tip screwdriver, turn the fuse(s) counterclockwise to remove the fuses. Replace the fuse(s) with one having the same type and rating (½ amp, type AGC, 250V).

## Front Panel

**Please read this section in its entirety before attempting to replace any control panel component.**

### SL-10 Pendant Components Access

The SL-10 pendant door hinges on the left side. Remove the two (2) screws on top of the pendant in order to open the pendant door.

**CAUTION!** Do not pinch the cable as the door is closed.

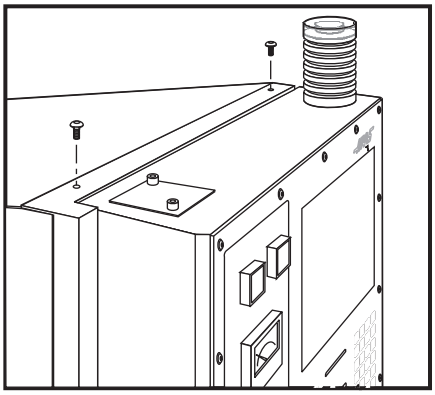

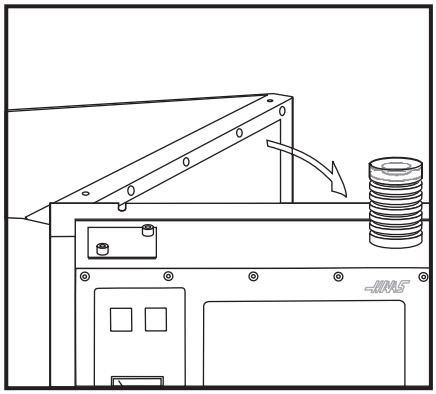

### LCD Assembly Replacement

**CAUTION!** Use an electrostatic discharge (ESD) strap when working inside the pendant.

1. Turn the power off and disconnect power to the machine.

2. Remove the screws holding the cover on the back of the operator's pendant. Take care to hold the cover in place until all screws have been removed.

3. Disconnect the video out cable (J16) from the SKBIF PC board and backlight cable.

4. Remove the four (4) hex nuts and washers beginning with the bottom, then remove the LCD assembly and set aside in a safe place.

**CAUTION!** Do not drop or damage the LCD when removing it from the control panel.

5. Use gloves to avoid getting fingerprints on the new LCD. Position the assembly onto the four bolts (two each on top and bottom). Place the washers and hex nuts on the bolts to hold in place. Once all washers have been attached and nuts have been hand-tightened, tighten down completely.

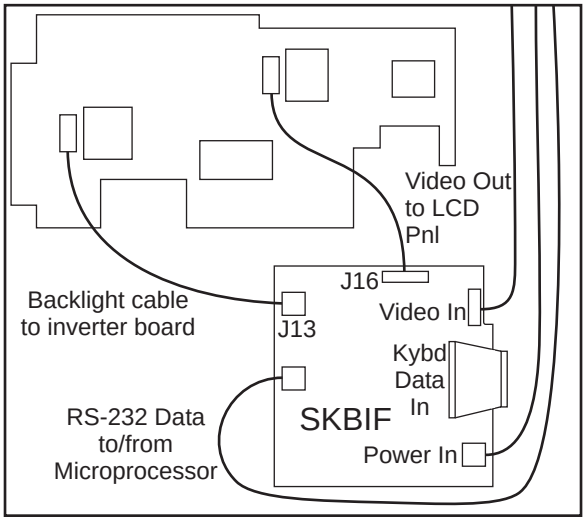


*Back of Operator's Pendant*

6. Plug the keyboard cables into the new receiver board (P1) and the power supply (TB2). Plug the power cable into the power supply board (TB1) and attach the green wire to ground. Plug the data cable into the receiver board (J3).

7. Replace the back cover panel and attach with the four screws previously removed.

Some LCD panel replacement kits include a panel with the inverter and data cables connected to a piggyback board on the panel itself, under the display shield. To properly connect such a display:

1. Power off the machine and install the new LCD panel in the control pendant. Disconnect the data and inverter cables from the piggyback board (they are accessible through the rectangular cutouts in the display shield shown in the following photo).

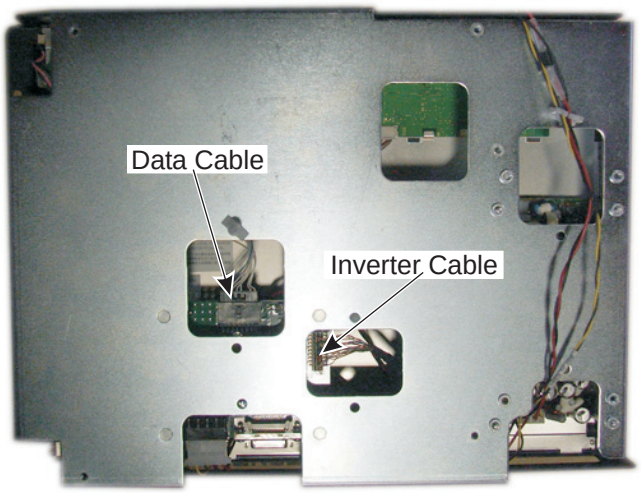


2. Connect these cables directly to the SKBIF PCB. If the cables that came with the new display are not long enough, reuse the cables from the old display.

3. Power on the machine and check the display. If the image is blurry, toggle the switches at SW2 on the SKBIF PCB to correct the problem.

## Jog Handle

The Jog handle is actually a 100-line-per-revolution encoder, used to move one axis at a time. If no axis is selected for jogging, turning the handle has no effect. When the axis moved reaches its travel limits, the handle inputs will be ignored in the direction that would exceed the travel limits. Parameter 57 bit 0 can be used to reverse the direction of operation of the handle.

### Jog Handle Replacement

1. Turn the machine power off.

2. Remove the screws holding the cover on the back of the pendant. Take care to hold the cover in place until all screws have been removed.

3. Unplug the cable leading to the jog handle encoder.

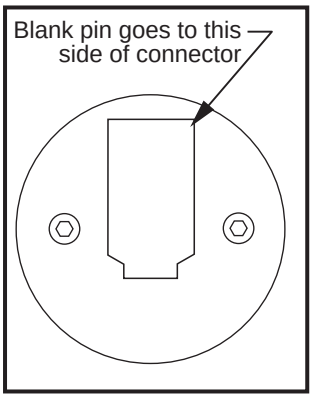


*Jog Handle Encoder*

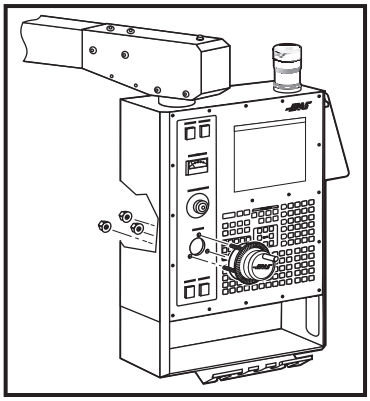

*Jog Handle Removal*

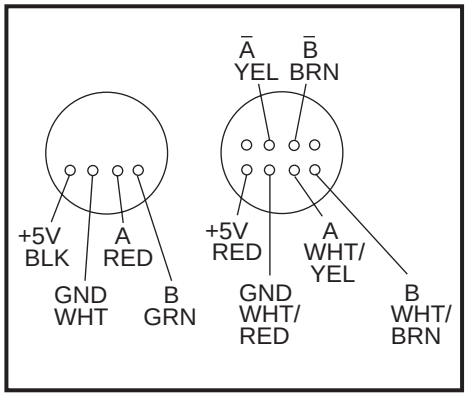


*Jog Handle Wiring Diagram*

4. Using the 5/64” allen wrench, loosen the two screws holding the knob to the control panel and remove.

5. Remove the three screws holding the jog handle encoder to the control panel and remove.

6. Replacement is reverse of removal. Important! The blank pin side of the connector must face as shown when reconnecting; otherwise, damage may occur to the machine.

## Power On/Off Switches

The Power On switch engages the main contactor. The On switch applies power to the contactor coil and the contactor thereafter maintains power to its coil. The Power Off switch interrupts power to the contactor coil and turns power off. Power On is a normally open switch and Power Off is normally closed. The maximum voltage on the Power On and Power Off switches is 24V AC and is present any time the main circuit breaker is on.

## Emergency Stop Switch

The Emergency Stop switch is normally closed. If the switch opens or is broken, servo power is removed instantly. This will also shut off the turret, spindle drive, and coolant pump. The Emergency Stop switch will shut down motion even if the switch opens for as little 0.005 seconds. Note that if Parameter 57 bit 3 is set to 1, it will cause the control to be powered down when Emergency Stop is pressed.

You should not normally stop a tool change with Emergency Stop as this will leave the tool changer in an abnormal position that takes special action to correct

If the lathe turret or mill tool changer (T/C) becomes jammed, the control will automatically come to an alarm state. To correct this, push the Emergency Stop button and remove the cause of the jam. Push the Reset key to clear any alarms. Push Zero Return and the Auto All Axes to reset the Z-axis and turret or T/C. Never put your hands near the turret or T/C when powered unless E-Stop is pressed.

## Keyboard Beeper

There is a beeper under the control panel that is used as an audible response to pressing keyboard buttons and as a warning beeper. The beeper is a one kHz signal that sounds for about 0.1 seconds when any keypad key, Cycle Start, or Feed Hold is pressed. The beeper also sounds for longer periods when an auto-shutdown is about to occur and when the “Beep at M30” setting is selected.

If the beeper is not audible when buttons are pressed, the problem could be in the keypad, keyboard interface PCB or in the speaker. Check that the problem occurs with more than one button and check that the beeper volume is not turned down or disconnected. If lamps do not turn on, check the GFCI plug.

## Lamp On/Off Switch

An on/off switch is supplied for the work lamp. It is located on the side of the operator’s pendant. The lamp uses 115V AC taken from P19 on the main power distribution board.

## Switch Replacement

1. Turn the machine power off. Remove the screws holding the cover on the back of the pendant. Take care to hold the cover in place until all screws have been removed.

2. Disconnect all leads to the switch connectors. Ensure all leads are properly marked for reconnecting later.

3. Unscrew the two small set screws, one on top and one on the bottom, and turn the switch counterclockwise to loosen. Separate from the front portion and pull out.

4. To replace, screw the front and rear portions together (reverse of removal) and tighten down the two small set screws when the switch is properly positioned.

**NOTE:** The Power On, Power Off, and Emergency Stop switches must all have the connectors on the bottom of the switch.

5. Reconnect all leads to the correct switch.

## Spindle Load Meter

Load meter measures load on spindle motor as a percentage of rated continuous power of motor, with a slight delay between a load and actual meter reflection. The eighth A-to-D input also provides a measure of spindle load for cutter wear detection. Second page of diagnostic data displays % of spindle load. Meter should agree with display within 5%. Spindle drive display #7 should also agree with load meter within 5%. There are different types of spindle drives used in the control, all are equivalent in performance but are adjusted differently.

### Spindle Load Meter Replacement

1. Turn the power off and disconnect power to the machine. Remove the screws holding the cover panel on the back of the pendant. Take care to hold the cover panel in place until all screws are removed.

2. Disconnect the two leads at the back of the spindle load meter assembly. Ensure the two leads are properly marked for reconnecting later.

3. Unscrew the four screws that hold the spindle load meter assembly to the control panel. Take care to hold the assembly in place until all screws have been removed. Remove the assembly.

4. Installation is reverse of removal. Ensure leads go to the correct location.

## Keypad Replacement

1. Turn the power off and disconnect power to the machine. Remove the screws holding the rear cover to the back of the pendant. Take care to hold the cover in place until all screws are removed.

2. Unplug the keypad's 24-pin ribbon cable from the Keyboard Interface board.

3. Remove the screws from the front of the pendant. Take care to hold the cover in place until all screws have been removed. Remove the pieces and set aside in a safe place.

4. Using a flat, blunt tool, such as putty knife, pry the keypad away from the control panel. Pull the ribbon cable through the opening in the control to remove.

5. To replace, first put the bezel spacer in place and fasten temporarily with screws in the top corners.

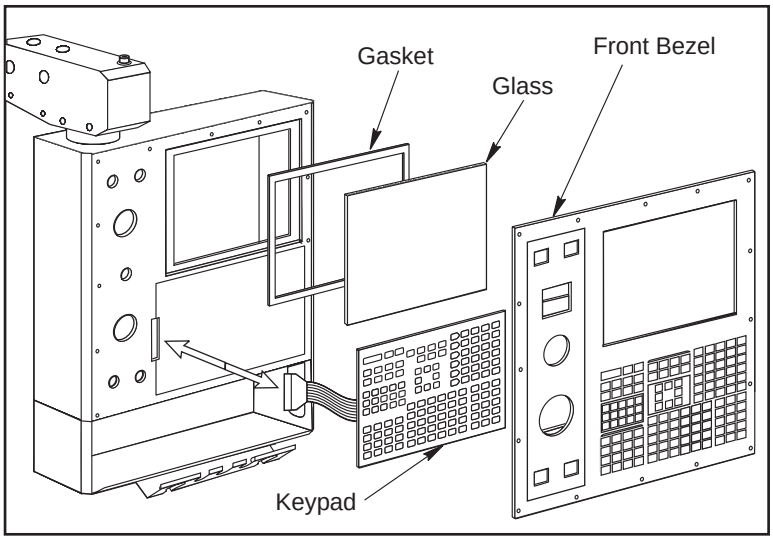


*Keypad Installation*

6. Insert the ribbon cable through the opening in the control panel. Expose the adhesive strip on the back of the keypad and press it into place in the upper right corner of the keypad recess. Press to the control panel to mount. Plug the ribbon cable into the Keyboard Interface board, taking care to not bend the pins.

7. Replace the front and rear cover panels and fasten with the screws that were previously removed.

## Serial Keyboard Interface Replacement

**NOTE:** Refer to “Cable Locations” for a diagram of this board.

1. Follow all precautions noted previously before working in the control cabinet.

2. Turn the main switch (upper right of electrical cabinet) to the off position.

3. Remove the four screws on the back of the pendant, then remove the cover panel. Take care to hold the panel in place until all screws have been removed.

4. Disconnect all leads to the Serial Keyboard Interface (SKBIF) board. Ensure all cables are properly labeled.

5. After all cables have been disconnected, unscrew the four screws holding the Serial KBIF board to the control box. Take care to hold the board in place until all screws have been removed. Place the screws and standoffs aside for later use.

6. Replace the Serial KBIF board, using the four screws previously removed. Starting at the top right, attach each screw and standoff loosely, until all are mounted, then tighten down.

7. Reconnect all cables to the Serial KBIF board at their proper locations.

8. Verify whether the machine is equipped with either a speaker or a beeper. Align the toggle switches of Switch 1 on the Serial KBIF board to their appropriate positions. Beeper operation requires that both S1 switches be set to ‘B’; speaker operation requires that both S1 switches be set to ‘S’.

## Solenoids

**Please read this section in its entirety before attempting to replace any solenoid assemblies.**

## Tool Release Piston (TRP) Air Solenoid Assembly (Horiz & Vert)

### Removal

1. Turn machine power on and raise spindle head to uppermost position, then turn the power off. Remove air supply from machine.

2. Remove sheet metal at rear and/or top of machine to access the back of the spindle (Mechanical Service manual).

3. Disconnect all air lines from the air solenoid assembly (Do not remove fittings). Disconnect the two leads from the low air pressure sensor.

4. Unscrew the air solenoid assembly from the tool release piston assembly, taking care not disturb the position of the clamp/unclamp switches. It may be necessary to remove the tool release piston to access the solenoid assembly.

5. Unplug the wiring leading to the plug marked on the solenoid bracket as “880 from I/O PCB to Solenoid Valves” and the plug marked “Spare”.

6. Unscrew the air solenoid from the air solenoid assembly. Remove the SHCS holding the assembly to the bracket and remove the assembly.

### Installation

1. Install the new air solenoid. Take care to not disturb the position of the clamp/unclamp switches.

2. Replace air solenoid assembly and attach to bracket with the SHCS previously removed. Tighten securely.

3. Reinstall the tool release piston assembly if removed (see Mechanical Service).

4. Reconnect the two leads to the low air preassure sensor. Reconnect wiring to plugs on solenoid bracket.

5. Ensure all air lines are reconnected to their proper fittings. Reconnect air supply to the machine, and check for leaks.

6. Replace the sheet metal.

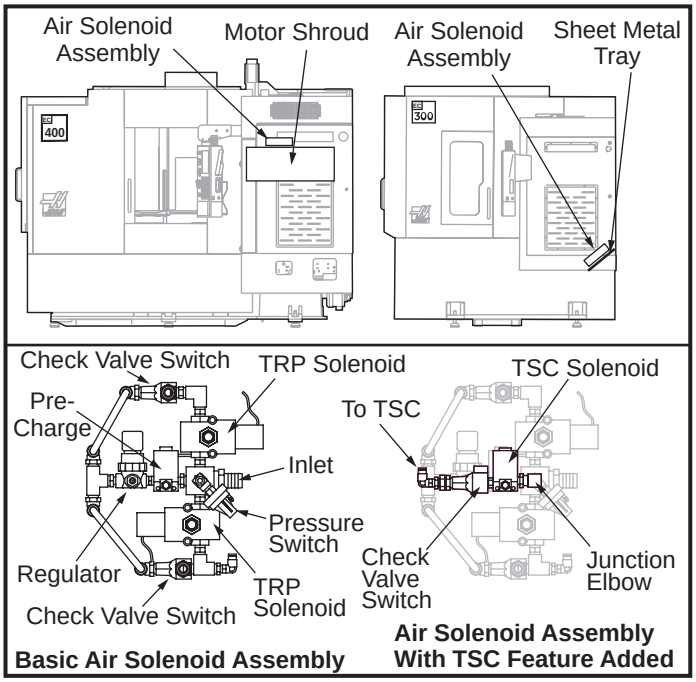


*Locations of EC-300 and EC-400 TRP Solenoids*

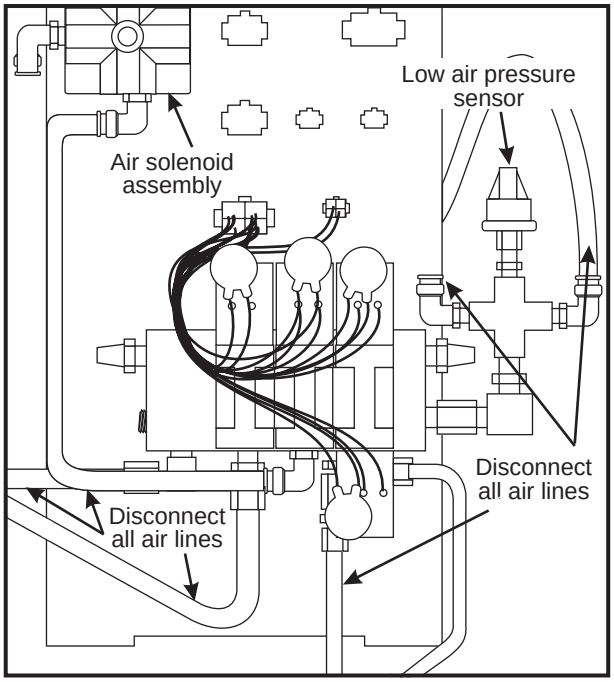


*VF-Series Air Solenoid Assembly*

## Spindle Lube Air Solenoid

### Removal

1. Turn the machine power off and remove the air supply from the machine.

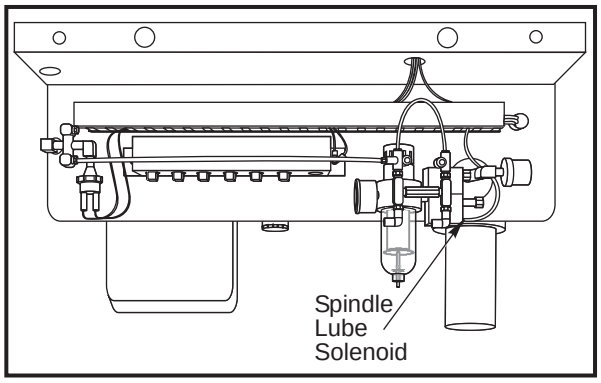


*Lube/Air Panel (Rear View)*

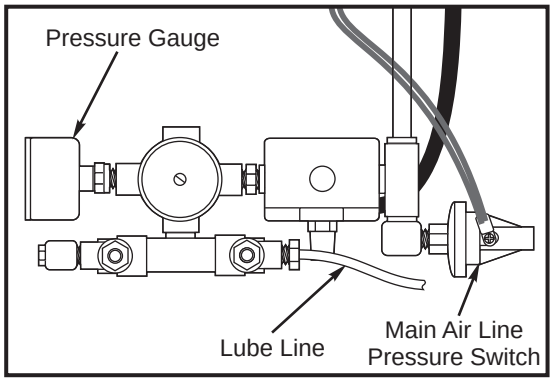


*Spindle Lube/Air Solenoid Assembly (Top View)*

2. a. **Lathe:** Disconnect the lube line from the spindle lube air solenoid assembly.
   b. **Mill:** Disconnect the air lines from the spindle lube air solenoid assembly.
3. Disconnect the electrical leads from the main air line pressure switch.
4. **Lathe:** Unscrew the solenoid assembly pressure gauge from the assembly.
5. Unscrew the entire solenoid assembly from the T-fitting.

### Installation

1. Reattach the solenoid assembly at the T-fitting.
2. a. **Lathe:** Replace the pressure gauge on the solenoid assembly and reconnect the lube line.
   b. **Mill:** Reconnect all air lines.

3. Reconnect the electrical leads to the main air line pressure switch.

4. Restore the air supply to the machine.

## Pneumatic Chuck/Turret Clamp/Unclamp Solenoid (Lathe)

### Removal

1. Turn machine power off and remove the air supply from the machine.

2. **Pneumatic Chuck:** Disconnect the two air hoses from the pneumatic chuck clamp/unclamp solenoid.

   **Turret:** Disconnect the three air hoses from the turret clamp/unclamp solenoid (see the Turret In/Out Adjustment), and disconnect exhaust lines.

3. Unplug the solenoid electrical lead (located on the rear of the lube air panel).

4. Remove the two SHCS holding the assembly to the bracket and remove the assembly.

### Installation

1. Replace the air solenoid assembly and attach it to the bracket with the two SHCS. Tighten securely.

2. Reconnect the electrical connection to the solenoid at the switch bracket.

3 Reconnect the two (three for Turret) air lines and turret exhaust lines, ensuring that all connections are tight and do not leak.

4. Restore the air supply to the machine.

## Encoders

### Damaged Encoder Strip/Read Head

The encoder read head and strip are used on SL-20/30/40 but not SL-20/30 long bed. If the encoder strip is damaged, it is possible that it can also damage the encoder read head. Alarm 437 (Tailstock Undershoot) will be generated.

If the read head is damaged the tailstock will not home. It will go home and then go in the negative direction. There is no number display on the B-Axis while the axis is in motion.

When replacing the encoder strip it is recommended that the encoder read head be removed first to avoid damaging it.

### String Encoder

The string encoder is used on all SL-20/30 long bed and all ST models (Optional on SS models). The string is wound up and retracted on a calibrated spool (like a fishing reel). If the string is not retracted properly, the encoder will misread and eventually fail generating alarm 437- Tailstock Undershoot.

## Smart Amplifier Troubleshooting

The Smart Amplifier has a microprocessor incorporated in the design. This allows the amplifier to detect and report detailed alarms. The software level necessary to display these new alarms is 15.02A or newer.

The Smart Amplifier is backward compatible to any machine that has a Vector Drive. New Smart Amplifiers and standard amplifiers may be used in any combination in the machine. However, if the machine does not have at least 15.02A software or newer the specific Smart Amplifier will not be displayed. The Smart Amplifier and the standard amplifier use the same Parameters. On non-thin pendant machines, at least two of the standard amplifiers must be used.

The Smart Amplifier does not have a 12VDC connector, and both the Fault (Red LED) and the Run (Green LED) are relocated. The 320VDC (H+ and H-) and the X, Y and Z-axis connections are also relocated.

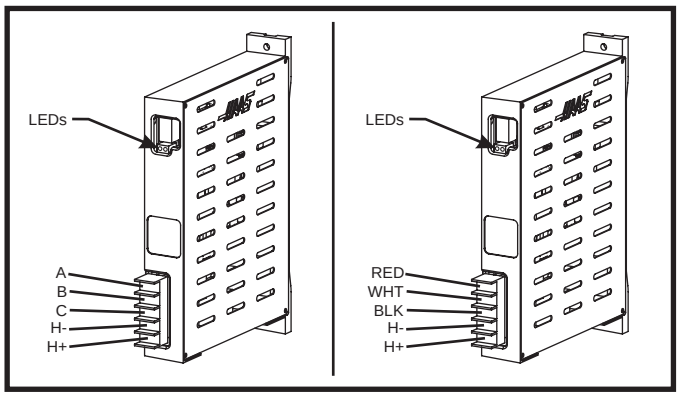


The smart amplifier will calibrate utilizing the microprocessor that is present in each of the Smart Amplifiers at power up. When power is applied to the Control Cabinet the Fault (Red LED) will illuminate and stay illuminated for a short time (approximately 5 seconds), this is called the “A” Phase Calibration. Then both LEDs will be out for a few seconds; this is called the “B” Phase Calibration. Next the Run (Green LED) will illuminate, indicating the Smart Amplifier is ready with no faults.

See TB0008 when replacing a non-smart amp with a smart amplifier.

## Smart Vector Drive Troubleshooting

The smart vector drive features a microprocessor that allows it to detect and display specific alarms (software version 15.02A or newer only). It is backward compatible to any machine with a vector drive regardless of software version; however, the drive-specific alarms will not display in older software.  Such alarms will display in the same way as with old-style drives.

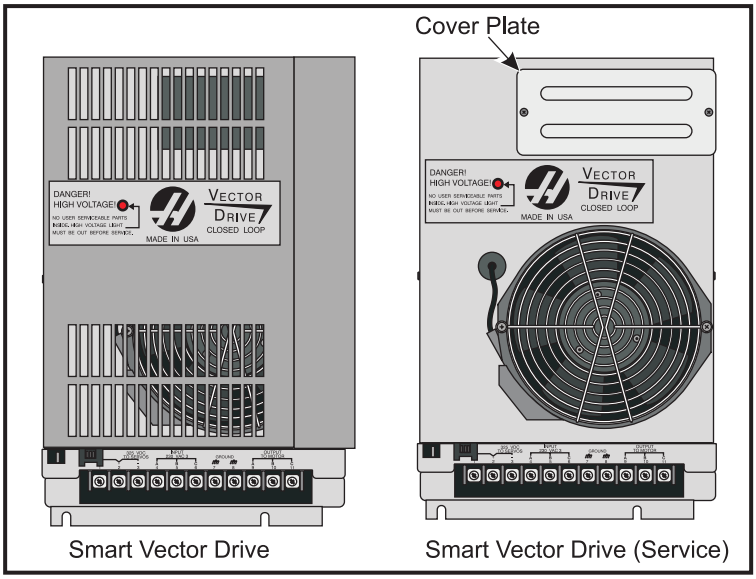


Smart vector drives installed in new machines include a cover, and the machines electrical cabinet door is cut to accommodate it. Service drives are shipped without the cover for installation in older machines. When replacing a drive in a machine built to accommodate the cover, use the cover from the old drive.

When installing a smart vector drive without the cover, install the cover plate to the front of the vector drive. When installing with the cover, install the cover plate to the top of the vector drive.

You will also need several cables. Please see 93-32-5558A for the 40 HP drive and 93-32-5559A for the 20 HP drive.

### Troubleshooting

To properly troubleshoot the Vector Drive, use the following questions as a guide:

- What alarms are generated?
- When does the alarm occur?
- Is the Vector Drive top fault light on?
- Is there a fault light on any of the servo amplifiers?
- Does the alarm reset?
- Does the spindle motor turn at all?
- Does the spindle turn freely by hand?
- Have the C-axis parameters been confirmed?
- What is the input voltage to the vector drive unit?
- What does the DC Bus voltage measure? (320 VDC to 345 VDC)
- Does the DC Bus voltage displayed on the diagnostic page match the measured DC Bus voltage?

All of the questions above must be answered. The DC Bus voltage should be between 320 VDC to 345 VDC with the machine powered up but not running. If the voltage is not in this range, adjust the taps on the main line transformer until this voltage range is achieved. There is a possibility the drive is faulty, but low Bus voltage can also be caused by a shorted REGEN load or a shorted amplifier.

### If the DC Bus voltage is below 50 VDC and never goes any higher, perform Steps 1-6.

1. With the machine powered up, is the green “POWER-ON” L.E.D. lit? If not, replace the Vector Drive unit.
2. Power down the machine. Disconnect the REGEN load (terminals 1 and 2 on the Vector Drive unit) and measure the resistance from each wire-to-chassis ground (open) and between the wire leads. The resistance should be 8.6 ohms for machines with 20/15 Vector drives and HT10K mills equipped with 40/30 drives. All other machines with 40/30 drives should measure 6 ohms. If not, replace the REGEN load or cabling.
3. Disconnect cable 490 at terminals 2 and 3 of the Vector Drive and from the servo amplifiers. With a multimeter in the diode mode, place the red meter lead to the +HV terminal and the black meter lead to the -HV terminal of each amplifier. The meter should read open.
4. Reverse the leads: Place the red meter lead on the -HV terminal and the black lead on the +HV terminal. The meter should read .7 ohms in both instances. If not, replace the faulty amplifier.
5. Measure the resistance between terminals 1 and 3 of the Vector Drive. The meter should read greater than 100K ohms. If not, the Vector Drive is faulty.
6. If the green “POWER-ON” L.E.D. was lit (from Step 2), leave both 490 cables (2 and 3) disconected from the drive and power up the machine.

   a. Does the DC Bus voltage come up? If not, the Vector Drive is faulty.

   b. Measure the voltage between terminals 1 and 3. The voltage should be 300 VDC or more. If not, the Vector Drive is faulty.

If both ‘a’ and ‘b’ check out okay, there is a problem with either the amplifiers or the REGEN load.

**If the fault occurs upon acceleration -or- the spindle accelerates slowly -or- the spindle makes noise, do the following:**

7. Disconnect the output cables to the spindle motor. Turn on the machine and press <RESET>. Do not command the spindle to turn. With a volt meter, measure the DC voltage between each output phase (terminals 9, 10, and 11) to the 320V RTN (terminal 3). The meter should read 165 VDC in each case, else one phase is faulty.

8. Measure the resistance across the motor wires from phase to phase and from each phase to chassis. The meter should read .1 ohms phase-to-phase and open phase-to-chassis. If the fault occurs upon deceleration or acceleration just as the spindle reaches its specified speed, or if an overvoltage alarm (119) occurred, do the following:

9. Disconnect the REGEN load resistors (terminals 1 and 2) and measure the resistance from each wire lead-to-chassis ground and between the wire leads. The meter should read open lead-to-ground, and 6 ohms between the leads for machines with 40/30 Vector drives and 8.6 ohms between the leads on machines with 20/15 Vector drives and HT10K mills.

10. Measure the resistance from terminal 1 to terminal 3. If the resistance is less than 100K, the drive is faulty.

11. With the REGEN load left disconnected, power-up the machine and command a spindle speed of 700 RPM (300 RPM for lathes in high gear). Press <RESET> while monitoring the DC voltage between terminal 1 and terminal 3. The voltage should read 330 VDC and then drop to less than 50 VDC momentarily. If not, that drive is faulty. If the voltage at RESET was okay and the alarm was resettable, the REGEN load should be replaced even if the resistance appears to be okay.

## PCB Replacement

**Please read this section in its entirety before attempting to replace any PCBs**

### Microprocessor Assembly

The microprocessor assembly is in the control cabinet at the top left position. It contains three large boards. They are: Microprocessor, the Video/Keyboard and the MOCON. All three boards of the processor assembly receive power from the low voltage power supply. The three PCBs are interconnected by a local buss on dual 50-pin connectors. At power-on, some diagnostic tests are performed on the processor assembly and any problems found will generate Alarms 157 or 158. In addition, while the control is operating, it continually tests itself and a self test failure will generate Alarm 152.

**Coldfire II testing.**

This test will erase both BBU and Flash memory. Prior to conducting this test, you will need to back up Parameters, Offsets, Settings, Variables, Programs, etc. just as you would when doing a software load. You will also need to be prepared to reload the software binary file that was previously loaded. If the processor passes all the tests, you should not have to replace it.

Procedure:

1. Press and hold <PRGRM /CONVRS> while powering on the control.

2. From the prompt press <E> then <WRITE/ENTER>

3. There will be a few questions to answer. Answer “Y” to MOCON, and 16MB and “N” to Video Board Connected.

4. After the third pass of tests (see Figure 2) press <RESET>.

5. Re-Load software following normal software load procedures.

## Mocon, Video/Keyboard, & Microprocessor

**WARNING!**

**The electrical panel will have residual voltage, even after power has been shut off and/or disconnected. Never work inside this cabinet until the small red Charge light on the servo amplifiers go out. The servo amplifiers are on the left side of the main control cabinet and about halfway down. This light is at the top of the circuit card at the center of the assembly. Until this light goes out, there are dangerous voltages in the assembly even when power is shut off.**

### Ground straps must be used when handling boards.

**NOTE:** Board arrangement may differ from the order of replacement that follows. Steps for replacement will only differ in which board may need to be removed before getting to the necessary board.

## Motor Controller (MOCON)

Machines are equipped with a microprocessor-based brushless motor controller board (MOCON) that replaces the motor interface in the brush type controls. It runs in parallel with the main processor, receiving axis commands and closing the loop around the axis motors.

In addition to controlling the axis and detecting axis faults, the motor controller board (MOCON) is also in charge of processing discrete inputs, driving the I/O board relays, commanding the spindle, and processing the jog handle input. It also controls 6 axes, so there is no need for an additional board for a 5-axis machine. Four LEDs are used to diagnose MOCON problems:

The RUN" LED will turn on, indicating that Mocon code was found in ROM and is being executed. This LED will turn off if a processor exception causes the Mocon code to abort execution.

The "STAT" LED indicates the following (Specific to Mocon 11.00 or later software)

a. Continuously ON - Normal status. board passed all power-on tests; no problems encountered

b. Blinks 3 times - Communication with main processor failed

c. Blinks 4 times - Internal ±12V testing failed

d. Blinks 5 times - Internal watchdog circuit failed

e. Blinks rapidly - EPROM CRC failed

The "Halt" LED glows when the board is in use (processing).

The "+5" LED lights when the board has power.

### MOCON Board Replacement

1. Turn machine power off and turn the main switch (upper right of electrical cabinet) to the off position.

2. Open the cabinet door enough to safely work on the electrical panel. Wait until the red charge light on the servo amplifiers (servo drive assembly on brush machines) goes out before beginning any work.

3. Disconnect all leads to the Motor Controller (MOCON) board, and ensure all cables are properly labeled.

4. After all cables have been disconnected, unscrew the standoffs, taking care to hold the board in place until all standoffs have been removed.

**NOTE:** If the Video/Keyboard or Processor boards need replacing, skip the next step.

5. Replace the MOCON board, attaching it to the Video/Keyboard (beneath the MOCON board) with the standoffs, and reconnect all leads (previously removed) to their proper connections.

6. If a second MOCON board is present, be sure to connect the jumper on the second MOCON board.

## Video/Keyboard

The Video/Keyboard PCB generates the video data signals for the monitor and the scanning signals for the keyboard. In addition, the keyboard beeper is generated on this board. There is a single jumper on this board used to select inverse video. The video PCB connectors are:

| | | | |
|---|---|---|---|
| P1 | Power connector | J11 | SPARE |
| J3 | Keyboard (700) | J12 | Floppy |
| J4 | Address bus | J13 | Video (760) |
| J5 | Data | J14 | RS422 B |
| J10 | Floppy V+ | J15 | RS422 A |

### Video/Keyboard Replacement

1. Remove the MOCON board as previously described.
2. Disconnect all leads to the Video/Keyboard. Ensure all cables are properly labeled for reconnecting later.
3. After all cables have been disconnected, unscrew the standoffs, taking care to hold the board in place until all standoffs have been removed.

**NOTE:** If the Processor board needs replacing, skip the next step.

4. Replace the Video/Keyboard, attaching it to the Processor board with the standoffs.
5. Reconnect all leads (previously removed) to their proper connections.
6. Replace the MOCON board.

## Microprocessor PCB (68ECO30)

The Microprocessor PCB contains the 68ECO30 processor running at 40 MHz, one 128K EPROM; between 1MB and 16MB of CMOS RAM and betwen 512K and 1.5MB of Fast Static RAM. It also contains a dual serial port, a battery to backup RAM, buffering to the system buss, and eight system status LED's.

Two ports on this board are used to set the point at which an NMI is generated during power down and the point at which Reset is generated during power down.

The eight LEDs are used to diagnose internal processor problems. As the system completes power up testing, the lights are turned on sequentially to indicate the completion of a step. The lights and meanings are:

**RUN** **Program Running Without Fault Exception. (Normally On)** - If this light does not come on, or goes out after coming on, there is a problem with the microprocessor or the software running in it. Check all of the buss connectors to the other two PCBs and ensure all three cards are getting power.

**PGM** **Program Signature Found in Memory. (Normally On)** - If this light does not come on, it means that the main CNC program package was not found in memory, or that the auto-start switch was not set. Check that Switch S1-1 is on and the EPROM is plugged in.

**CRT** **CRT/LCD Video Initialization Complete. (Normally On)** - If the light does not come on, there is a problem communicating with the Video PCB. Check buss connectors to ensure it is getting power.

**MSG** **Power-on Serial I/O Message Output Complete. (Normally On)** - If light does not come on, a problem exists with serial I/O or interrupts. Disconnect anything on the external RS-232 and retest.

**SIO** **Serial I/O Initialization Complete. (Normally On)** - If this light does not come on, there is a problem with the serial ports. Disconnect anything on the external RS-232 and test again.

**POR** **Power-On-Reset Complete. (Normally On)** - If this light does not come on, there is a problem with the Processor PCB. Check that the EPROM is plugged in. Test the card with buss connectors off.

**HALT** **Processor Halted in Catastrophic Fault. (Normally Dim)** - If this light comes on, there is a problem with the Processor PCB. Check that the EPROM is plugged in. Test the card with buss connectors off.

**+5V** **+5V Logic Power Supply is Present. (Normally On)** - If this light does not come on, check the low voltage power supply and check that all three phases of 230V input power are present.

There is 1 two-position DIP switch on the Processor PCB labled S1. Switch S1-1 must be ON to auto-start the CNC operational program. If S1-1 is OFF, the PGM light will remain off. Switch S2-1 is used to enable Flash. If it is disabled it will not be possible to write to Flash.

The processor connectors are:

| | | | |
|---|---|---|---|
| J1 | Address buss | J5 | Serial port #2 (for auxiliary 5th axis) (850A) |
| J2 | Data buss | J3 | Power connector |
| J4 | Serial port #1 (for upload/download/DNC) (850) | J6 | Battery |

## Processor Board Memory Retention Battery Replacement

Alarm 124 indicates an imminent battery failure. To preserve CMOS RAM contents while the machine is powered off, the 3.3V lithium battery must be replaced within 30 days of the first alarm. To replace the battery:

1. Backup all parameters, settings, programs, offsets, history, and macro variables.

2. Haas kit 32-1010 includes a temporary battery with a jumper connector. Plug this jumper into J6 (68K PCB) or J15 (Coldfire PCB). This ensures that memory contents are retained during the procedure.

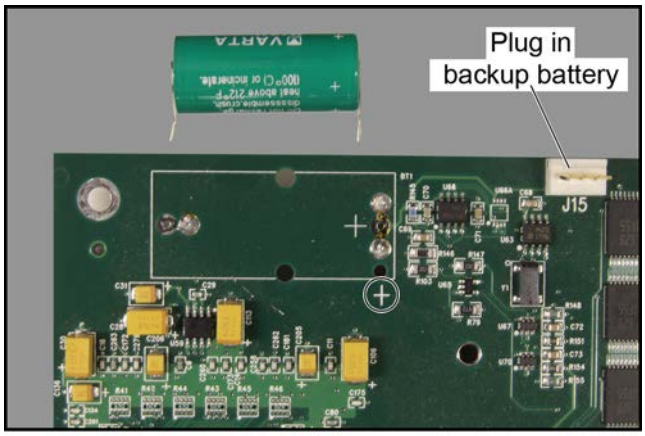


*Processor Battery Replacement (Coldfire Board Shown)*

**NOTE:** Do not remove the existing battery before the backup battery is installed, or remove the backup before a fresh battery has been installed. **This will result in complete machine memory loss**, which cannot be reversed.

3. Properly ground yourself and unsolder the battery from the processor board.

4. Clean the battery contact areas and solder the new battery in place, observing correct battery orientation (the positive battery connector is marked on the board and circled in the previous photograph).

5. With the new battery in place, disconnect the backup battery jumper.

## Processor Board Replacement

1. Remove the MOCON board, and the Video/Keyboard as previously described.

2. Disconnect all leads to the Processor board. Ensure all cables are properly labeled for reconnecting later.

3. After all cables have been disconnected, unscrew the standoffs, taking care to hold the board in place until all standoffs have been removed.

4. Replace the Processor board, attaching it to the electrical cabinet with the standoffs, reconnect all leads (previously removed) to their proper connections, and replace Video/Keyboard and MOCON board.

## Input/Output Assembly

The Input/Output Assembly consists of a single printed circuit board called the I/O PCB.

The I/O PCB also contains a circuit for sensing a ground fault condition of the servo power supply. If more than 1.75 amps is detected flowing through the grounding connection of the 160V DC buss, a ground fault alarm is generated and the control will turn off servos and stop.

Relay K6 is for the coolant pump 230V AC. It is a plug-in type and is double-pole. Relays K9 through K12 are also plug-in types for controlling the tool changer motors.

### I/O Board Replacement

1. Follow all precautions noted previously before working in the electrical cabinet.

2. Disconnect all leads to the Input/Output board and move aside for removal. Ensure all cables are properly labeled for reconnecting later.

3. Remove the board by first removing the twelve screws that fasten it to the cabinet. Take care to hold the board in place until all screws have been removed.

4. Replace the I/O board, attaching it to the cabinet with the twelve screws previously removed, and reconnect all leads to the I/O board. Check for any additional jumper settings per I/O release notes.

## Power Transformer Assembly (T1)

The power transformer assembly converts three-phase input power (50/60Hz) to three-phase 230V and 115V power. Two transformers are used, depending on the input voltage range. The low voltage transformer has four input connections to allow for a range of voltages from 195V RMS to 260V RMS. The high voltage transformer has five input connections and will accept a range of voltages from 354V RMS to 488V RMS.

The 230V is used to power the spindle drive. THe 230V also supplies the power to the vector drive, which supplies 325V DC power for the axis servo amplifiers. The 115V is used by the video monitor, solenoids, fans and pumps, in addition to supplying power to the main LVPS used by the control electronics.

The transformer assembly is located in the lower right hand corner of the main cabinet. Besides the high/low voltage variations, two different power levels are available depending on the spindle motor used. The small and large transformers have power ratings of 14 KVA and 28 KVA, respectively, and are protected by the main circuit breaker.

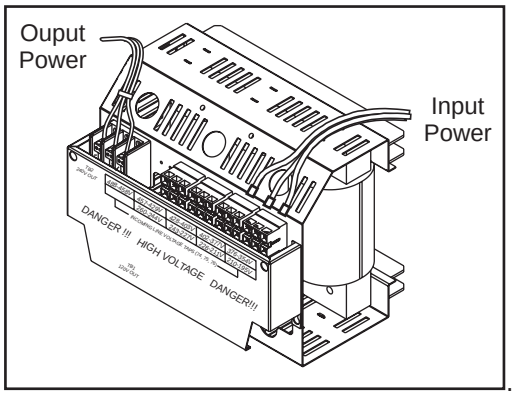


*Polyphase Bank Transformer*

### Primary Connection To T1

Input power to T1 is supplied through CB1, the main circuit breaker. Three-phase 230 to T1 is connected to the first three terminals of TB10.

Circuit breaker CB1 protects the spindle drive and shuts off all power to the control. A trip of this breaker indicates a serious overload problem and should not be reset without investigating the cause of the trip.

### Main Contactor K1

Main contactor K1 is used to turn the control on and off. The Power On switch applies power to the coil of K1 and after it is energized, auxiliary contacts on K1 continue to apply power to the coil. The Power Off switch on the front panel will always remove power from this contactor.

When the main contactor is off, the only power used by the control is supplied through two ½ amp fuses to the circuit that activates the contactor. An overvoltage or lightning strike will blow these fuses and shut off the main contactor.

The power to operate the main contactor is supplied from a 24V AC control transformer that is primary fused at ½ amp. This ensures that the only circuit powered when the machine is turned off is this transformer and only low voltage is present at the front panel on/off switches.

### Voltage Selection Taps

There are four labeled plastic terminal blocks. Each block has three connections for wires labeled 74, 75, and 76. Follow the instructions printed on the transformer.

### Secondary Connection To T1

The secondary output from T1 is 115V AC three-phase CB2 that protects the secondary of transformer T1 and is rated at 25 amps.

**Optional 480V Transformer**

| 60Hz Input Voltage Range | Tap | 50Hz Input Voltage Range | Tap |
|---|---|---|---|
| 493-510 | 1 (504) | 423-440 | 1 (504) |
| 481-492 | 2 (492) | 412-422 | 2 (492) |
| 469-480 | 3 (480) | 401-411 | 3 (480) |
| 457-468 | 4 (468) | 391-400 | 4 (468) |
| 445-456 | 5 (456) | 381-390 | 5 (456) |
| 433-444 | 6 (444) | 371-380 | 6 (444) |
| 420-432 | 7 (432) | 355-370 | 7 (432) |

### Power-Up Low Voltage Control Transformer (T5)

The low voltage control transformer, T5, supplies power to the coil of the main contactor K1. It guarantees that the maximum voltage leaving the Power Supply assembly when power is off is 12V AC to earth ground. It is connected via P5 to the Power PCB.

### Operator's Work Light

Main transformer (T1) outputs 115V AC to the work light.

## Power Supply Assembly

All control power passes through a power supply assembly on the upper right corner of the control cabinet.

### Power PCB (PSUP)

Low voltage power distribution and high voltage fuses and circuit breakers are mounted on a circuit board called the Power PCB.

### Secondary Circuit Breakers

The following circuit breakers are located on the Power supply assembly:

**CB2** Controls the 115V power from the main transformer to the I/O PCB and, if tripped, will turn off all inputs and outputs. CB2 could be tripped by a short circuit in the cables.

**CB3** Controls the power to coolant pump only. It can be tripped by an overload of the coolant pump motor or a short in the wiring to the TSC motor, or lathe hydraulic pump.

**CB4** Controls the power to chip conveyor only.

**CB5** Controls power to the TSC coolant pump only. It can be tripped by an overload of the TSC coolant pump motor or a short in the wiring to the motor.

**CB6** Single-phase 115V protected ground fault interrupt circuit and output for the worklight.

### Power PCB (PSUP) Replacement

1. Follow all precautions noted previously before working in the electrical cabinet

2. Disconnect all leads to the Power PCB (PSUP) and set aside for removal. Ensure all cables are properly labeled for reconnecting later.

3. After all cables have been disconnected, remove the seven screws holding the Power board to the cabinet and remove the board. Take care to hold the Power board in place until all screws have been removed.

**NOTE:** If replacing the Low Voltage Power Supply board, please skip the next step.

4. Replace the Power board, attaching it with the seven screws previously removed. Do not forget to use the lower left screw for a ground connection.

5. Reconnect all cables to Power board at proper location. Refer to release notes for additional information.

## Low Voltage Power Supply

The low voltage power supply provides +5V DC, +12V DC, and -12V DC to all logic sections of the control. It operates from 115V AC nominal input power, and continues to operate correctly over 90 to 133V AC.

### Low Voltage Power Supply (LVPS) Replacement

1. Remove the Power Distribution (Power) board as previously described.

2. Disconnect all leads to the Low Voltage Power Supply (LVPS) board. Ensure all cables are properly labeled for reconnecting later.

3. After all cables are disconnected, unscrew the two standoffs at the bottom of the board. Unscrew the remaining two screws at the top of the LVPS board. Hold the board in place until all screws are removed.

4. Replace the LVPS board, attaching it to the cabinet with the two screws and standoffs previously removed.

5. Replace the Power board as previously described.

## RS-232 Serial Interface

There are two connectors used for the RS-232 interface. The RS-232 connector on most PCs is a male DB-25, so only one type of cable is required for connection to the controller, or between controllers. This cable must be a DB-25 male on one end and a DB-25 female on the other. Pins 1, 2, 3, 4, 5, 6, 7, 8, and 20 must be wired one-to-one. It cannot be a Null Modem cable, which inverts pins 2 and 3. To check cable type use a cable tester to check that communication lines are correct. The controller is DCE (Data Communication Equipment). This means that it transmits on the RXD line (pin 3) and receives on the TXD line (pin 2). The RS-232 connector on most PCs is wired for DTE (Data Terminal Equipment), requiring no special jumpers.

The Down Line DB-25 connector is only used when more than one controller is to be used. The first controller's down line connector goes to the second controller's up line connector, etc.

### Interfacing a Haas Rotary Control to the mill

The RS-232 interface sends and receives seven data bits, even parity, and two stop bits. The interface must be set correctly. The data rate can be between 110 and 19200 bits per second. When using RS-232, it is important to make sure that Parameter 26 (RS-232 Speed) and 33 (X-on/X-off Enable) are set to the same value in the controller and PC.

If Parameter 33 is set to on, the controller uses X-on and X-off codes to control reception, so be sure your computer is able to process these. It also drops CTS (pin 5) at the same time it sends X-off and restores CTS when is sends X-on. The RTS line (pin 4) can be used to start/stop transmission by the controller or the X-on/Xoff codes can be used. The DSR line (pin 6) is activated at power-on of the controller and the DTR line (pin 20 from the PC) is not used. If Parameter 33 is 0, the CTS line can still be used to synchronize output.

When more than one Haas controller is daisy-chained, data sent from the PC goes to all of the controllers at the same time, requiring an axis selection code (Parameter 21). Data sent back to the PC from the controllers is ORed together so that, if more than one box is transmitting, the data will be garbled. Because of this, the axis selection code must be unique for each controller.

### RS-232 Remote Command Mode

Parameter 21 must be non-zero for the remote command mode to operate as the controller looks for an axis select code defined by this parameter. The controller must also be in RUN mode to respond to the interface. Since the controller powers-on in Run mode, remote unattended operation is thus possible.

### RS-232 Line Noise

To minimize line noise on the serial port, reroute the cables straight up the left-hand side of the control to the processor stack. Do not run them above the I/O PCB or up the center wire channel to the processor.

Transmission errors may be best minimized with a good common ground between the PC and CNC control.

### RS-232 Loop Back Test

If you have a communications problem between Port #1 of the machine and your external computer, use the following procedure to isolate the problem to either internal or external causes.

1. Unplug the cable from Port #1 of the Control Panel, and plug the cable tester in (port #1).

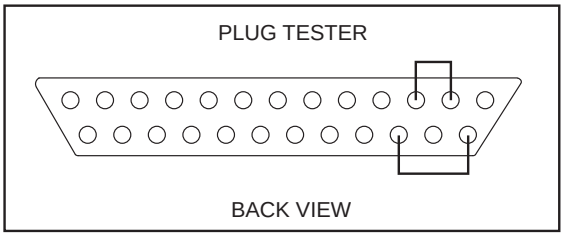


The RS-232 Plug Tester is a 25-pin male connector with the following pins shorted.
Pins 2 & 3 and Pins 14 & 16
In order to properly perform the test, Setting 14 must be set to CTS/RTS.

2. If the machine is on, cycle the power (power down then turn back on).

3. Press List Prog, followed by press Param Dgnos twice, then press Send RS232.

4. If the internal serial port is working, the lower left-hand part of the screen will display Serial Passed. (This means that the system, to the output of the control panel, is working. Check the cable to the computer set-up if you still have a communications problem.)

If the internal serial port is bad, the lower left-hand part of the screen will display Serial Failed. (This means there is a problem inside the control panel, or that the test connector is unplugged or missing.)

### RS-232 PCB Replacement

1. Follow all precautions noted previously before working in the electrical cabinet.

**NOTE:** It is necessary, when replacing the RS-232 board, to work from the inside and outside of the cabinet at the same time.

2. On the left side of the cabinet, at the top of the side panel, are two serial port connections labeled “Serial Port #1” and “Serial Port #2”. Serial Port #1 is the upper connection.

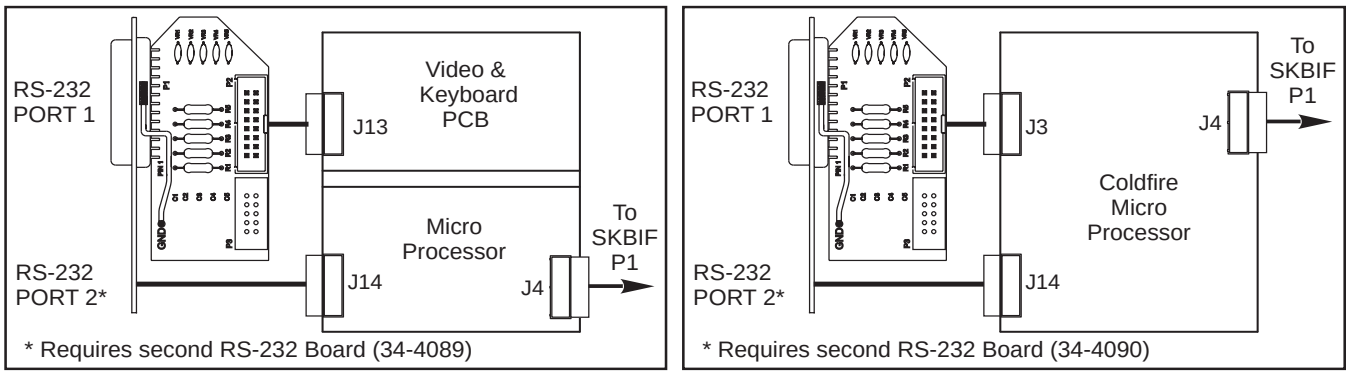


*RS-232 Wiring Diagram (with Serial Keyboard)*

3. To remove the RS-232 board, unscrew the two hex screws (on the exterior of the cabinet) holding the connector to the cabinet. From the inside of the cabinet, pull the connector through the panel, and disconnect the cable.

4. Replace the RS-232 board by first connecting the appropriate cable to the board (850 to Serial Port #1, 850A to Serial Port #2, then inserting the board (cable side up) through the left side panel. Attach with the two hex screws previously removed. Ensure the board for Serial Port #1 is the upper connector and the board for Serial Port #2 is the lower connector.

## Spare User M Code Interface

The M code interface uses outputs M21-25 and one discrete input circuit. M codes M21 through M25 will activate relays labeled M21-25. These relay contacts are isolated from all other circuits and may switch up to 120V AC at three amps. The relays are SPDT (Single Pole Double Throw).

**WARNING!**

**Power circuits and inductive loads must have snubber protection.**

The M-FIN circuit is a normally open circuit that is made active by bringing it to ground. The one M-FIN applies to all of the user M codes.

The timing of a user M function must begin with all circuits inactive (open). The timing is as follows:

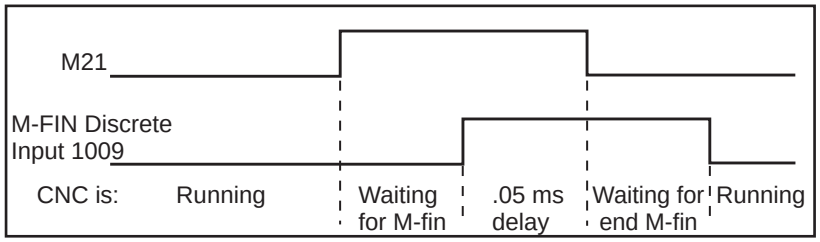


The Diagnostic Data display page may be used to observe the state of these signals.

## M Function Relays (M-FIN)

The I/O PC board has relays that are available to the user. M21 is already wired out to P12 at the side of the control cabinet. This is a four-pin DIN connector and includes the M-FIN signal.

**NOTE:** Refer to Diagnostic Data for specific machine Inputs and Outputs.

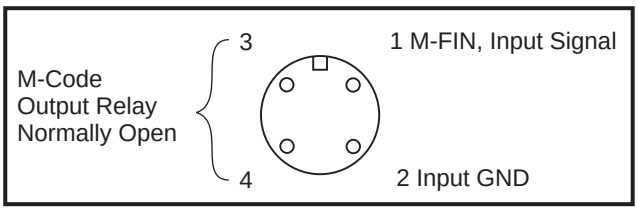


**NOTE:** Some or all of the M21-25 on the I/O PCB may be used for factory installed options. Inspect the relays for existing wires to determine which are in use.

## M-FIN Discrete Input

The M-FIN discrete input is a low voltage circuit. When the circuit is open, there is +12V DC at this signal. When the line is brought to ground, there is about 10 milliamps of current. M-FIN is discrete input 1009 and is wired from input 1009 on the I/O PCB (usually P10). The return line for grounding the circuit should come from that PCB. For reliability, these two wires should be routed in a shielded cable where the shield is grounded at one end only. The diagnostic display shows a “1” when the circuit is open and a “0” when it is grounded.

## Wiring the Relays

Relays are marked on the I/O PCB, with their respective terminals forward of them. If the optional 8M relay board is installed, connections on the I/O PCB are unused, since they are replaced by relays on the optional board. Refer to the figure, and the Probe Option figure in the Electrical Diagrams section for terminal labeling.

## Switches

### X, Y, Z Travel Limit Switches

Machine zero position is defined by a limit switch for each of the X, Y, and Z axes. After search for machine zero is complete, these switches are used to limit travel in the positive direction. Negative direction travel is limited by stored stroke limits. It is not normally possible to command the servo axes past the machine zero as servo travel lookahead will decelerate and stop each motor prior to exceeding the stroke limits.

Prior to performing a Power Up/Restart or an Auto All Axes operation, there are no travel limits. You can jog into the hard stops in either direction for X, Y, or Z. After a Zero Return has been performed, the travel limits will operate unless an axis hits the limit switch. When the limit switch is hit, the zero returned condition is reset and an Auto All Axes must be done again to ensure you can still move the servo back away from it.

The limit switches are normally closed. When a search for zero operation is being performed, the X, Y, and Z axes will move towards the limit switch unless it is already active (open); then move away from the switch until it closes again; then continue to move until the encoder Z channel is found. This position is machine zero.

On some mills, the auto search for zero in the Z-axis is followed by a rapid move from the limit switch position down to the tool change position, making the Z-axis a little different from the other axes. The position found with the limit switch is not machine zero but is the position used to pull tools out of the spindle. Machine zero for Z is below this by Parameter 64. Be careful during the Z zero search and stay clear of that rapid move.

### What Can Go Wrong With Switches?

Proximity switches are distance sensitive, and must be set no farther than .12” (3mm) away from an assembly or limit flag. An improperly set proximity switch will give inconsistence results, which may be interrupted as another problem. Any time a switch is replaced ensure the proper distance is set.

- If the machine is operated with Limit Switch inputs disabled, a Low Lube and Door Open alarm is generated. In addition, Home search will not stop at the limit switch and instead runs into the physical stops on each axis.
- If the switch is damaged and permanently open, the zero search for that axis will move in the negative direction at about 0.5 in/min until it reaches the physical travel stops at the opposite end of travel.

• If the switch is damaged and permanently closed, the zero search for that axis will move at about 10 in/min in the positive direction until it reaches the physical stops.

• If the switch opens or a wire breaks after the zero search completes, an alarm is generated, the servos are turned off, and all motion stops. The control will operate as though the zero search was never performed. Reset can be used to turn servos on, but you can jog that axis slowly.

### Clamp/Unclamp Switches

There are two switches used to sense the position of the turret or tool clamping mechanism. They are both normally closed and one will activate at the end of travel during unclamping and the other during clamping. When both switches are closed, it indicates that the turret or drawbar is between positions.

The diagnostic display can be used to display the status of the relay outputs and the switch inputs.

### Door Hold Switch

The switch is normally closed. When the door opens, the switch opens and the machine stops with a “Door Hold” function. When the door is closed again, operation continues normally.

If the door is open, it is not possible to start a program. Door hold will not stop a tool change operation, will not turn off the spindle, and will not turn off the coolant pump. The door hold function can be temporarily disabled with Setting 51, but this setting will return to Off when the control is turned off.

### Tool #1 Sense Switch

The tool rotation turret has a switch activated when tool one is in position or facing toward the spindle. At Power On this switch can indicate that tool #1 is in the spindle. If this switch is not active at power-on, the first tool change will rotate the turret until the switch engages and then move to the selected tool. The diagnostic display will show the status of this input switch as “Tool #1”. A “1” indicates that tool #1 is in position.

### Umbrella Tool Changer Geneva Wheel Position Mark (Vert)

The turret rotation mechanism has a switch mounted so that it is activated for about 30° of travel of the Geneva mechanism. When activated, this switch indicates that the turret is centered on a tool position. This switch is normally closed. The diagnostic display will show this status of this input switch as “TC MRK”. A “1” indicates the Geneva wheel is in position.

### Umbrella Tool Changer Shuttle In/Out Switches (Vert)

Two switches are used to sense the position of the tool changer shuttle and the arm that moves it. One switch is activated when the shuttle is moved to full travel inward and one is activated when it is in full travel outward. These switches are normally closed, so that both are closed between in and out. The diagnostic display will show the status of the input switch. A “1” indicates the associated switch is activated or open.

### Transmission High/Low Gear Position Switches

On machines with a two-speed transmission, there are two switches in the gearbox used to sense the position of the gears. One switch indicates “High” by opening and the other indicates “Low” by opening. Between gears, both switches are closed, indicating a between-gear condition. The diagnostic display shows the status of these switches and the Curnt Comds display shows which gear is selected. If the switches indicate that the gearbox is between gears, the display will indicate “No Gear”.

**NOTE:** The Transmission High/Low Gear Position Switches are located at the bottom of the Gearbox Assembly and are difficult to reach. Removal of this assembly is necessary to replace these switches. See the Mechanical Components Service Manual, for Spindle Motor and Transmission removal.

This page intentionally left blank

This section intentionally left blank

## Diagnostic Data

The Alarm Msgs display is the most important source of diagnostic data. At any time after the machine completes its power-up sequence, it will either perform a requested function or stop with an alarm. Refer to the Alarms chapter for their possible causes and some corrective action.

If there is an electronics problem, the controller may not complete the power-up sequence and the monitor will remain blank. In this case, there are two sources of diagnostic data; these are the audible beeper and the LEDs on the processor PCB. If the audible beeper is alternating a ½ second beep, there is a problem with the main control program stored in EPROMs on the processor PCB. If any of the processor electronics cannot be accessed correctly, the LEDs on the processor PCB will or will not be lit.

If the machine powers up but has a fault in one of its power supplies, it may not be possible to flag an alarm condition. If this happens, all motors will be kept off and the top left corner of the monitor will display a Power Failure Alarm message, and all other functions of the control will be locked out.

When the machine is operating normally, a second push of the Param/Dgnos key selects the diagnostics display page. The Page Up and Page Down keys are then used to select one of two different displays. These are for diagnostic purposes only and are not normally needed. The diagnostic data consists of 32 discrete input signals, 32 discrete output relays and several internal control signals. Each can have the value of 0 or 1. There are also up to three analog data displays and an optional spindle rpm display.

## Discrete Inputs/Outputs (Lathe)

**Discrete Inputs**

| # | Name | # | Name |
|---|---|---|---|
| 1000 | Tool Turret Unlock | 1016 | Spare |
| 1001 | Tool Turret Lock | 1017 | Spare |
| 1002 | Spare | 1018 | Spare |
| 1003 | Low Coolant | 1019 | Spare |
| 1004 | Automatic Door | 1020 | Low hyd pressure |
| 1005 | Spindle In Hi Gear | 1021 | T.S. Foot Switch |
| 1006 | Spindle In Low Gear | 1022 | Probe Not Home |
| 1007 | Emergency Stop | 1023 | Spare 2b |
| 1008 | Door Switch | 1024 | Tool Unclamp Rmt* |
| 1009 | M Code Finish | 1025 | Low Phasing 115V |
| 1010 | Over Voltage | 1026 | B F End of Bar |
| 1011 | Low Air Pressure | 1027 | Bar Feeder Fault |
| 1012 | Low Lube Press. | 1028 | Ground Fault |
| 1013 | Regen Overheat | 1029 | G31 Block Skip |
| 1014 | Spare | 1030 | B F Spindle Intlk |
| 1015 | Spare | 1031 | Conveyr Overcrnts |

**Discrete Outputs**

| # | Name | # | Name |
|---|---|---|---|
| 1100 | Hyd Pump Enable | 1116 | Move Spigot CW |
| 1101 | Spare | 1117 | Move Spigot CCW |
| 1102 | Spare | 1118 | Pal Ready Light |
| 1103 | Spare | 1119 | T.S. High Pressure |
| 1104 | Spindle Brake | 1120 | Tool Turret Out |
| 1105 | Coolant Pump on | 1121 | T.S. Reverse |
| 1106 | Power Off | 1122 | T.S. Forward |
| 1107 | Way Lube Pump | 1123 | (CE) Door Locked |
| 1108 | SB Motor Load PR | 1124 | M21 (Auto Door Clutch) |
| 1109 | SB Motor Load Bar | 1125 | M22 (Parts Catcher) |
| 1110 | Auto Door Open | 1126 | M23 (C Axis Engage) |
| 1111 | Auto Door Close | 1127 | HPC Coolant |
| 1112 | Spindle Hi Gear | 1128 | Green Beacon On |
| 1113 | Spindle Low Gear | 1129 | Red Beacon On |
| 1114 | Unclamp Chuck | 1130 | Enable Conveyor |
| 1115 | Lock Spindle | 1131 | Reverse Conveyor |

The second page of diagnostic data is displayed using the Page Up and Page Down keys. It contains:

**Inputs 2**

| | |
|---|---|
| X-axis Z Channel | X Motor Over Heat |
| Y-Axis Z Channel | Y Motor Over Heat |
| Z-axis Z Channel | Z Motor Over Heat |
| A-axis Z Channel | A Motor Over Heat |
| B-axis Z Channel | B Motor Over Heat |
| C-axis Z Channel | C Motor Over Heat |
| X Home Switch | X drive fault |
| Y Home Switch | Y drive fault |
| Z Home Switch | Z drive fault |
| A Home Switch | A drive fault |
| B Home Switch | B drive fault |
| C Home Switch | C drive fault |
| X Cable Input | S Z CH Spindle Z Channel |
| Y Cable Input | |
| Z Cable Input | |
| A Cable Input | |
| B Cable Input | |
| C Cable Input | |

The Temp-Track option displays the X and Z ballscrew temperatures on the Inputs2 diagnostics screen just above “SP Load” when Parameter 266 or 268 bit 9 “Temp Sensor” is set to 1. The following inputs and outputs pertain to the Haas Vector Drive. If it is not enabled, a value of * is displayed. Otherwise, it displays a 1 or 0.

**Haas Vector Drive**

| Name | Name |
|---|---|
| Spindle Forward | Spindle Fault |
| Spindle Reverse | Spindle Locked |
| Spindle Lock | Spindle Cable Fault |
| Spindle At Speed | Spindle Overheat |
| Spindle Stopped | |

**Analog Data**

| Name | Description |
|---|---|
| SP LOAD | Spindle load in % |
| SP SPEED | Spindle rpm CW or CCW |
| RUN TIME | Total machine run time |
| TOOL CHANGES | Number of tool changes |
| VER X.XXX | Software version number |
| YY/MM/DD | Today’s date |
| MDL SL-__ | Model number |
| DC BUSS | Mocon II |

## Discrete Inputs/Outputs (Mills)

| # | Name | # | Discrete Input Name |
|---|---|---|---|
| 1000 | TC Changer In/SMTC Pocket Down | 1023 | Spare 3/APC Pin Clr #2 |
| 1001 | TC Changer Out/SMTC Pocket Up | 1024 | Tool Unclmp Rmt* |
| 1002 | Tool One In Pos. | 1025 | Spare |
| 1003 | Low TSC Pressure | 1026 | Spare 3A/APC Pal #2 Home |
| 1004 | Tool In Position | 1027 | Spare 3B/APC Pal #1 Home |
| 1005 | Spindle High Gear | 1028 | Ground Fault |
| 1006 | Spindle Low Gear | 1029 | G31 Block Skip |
| 1007 | Emergency Stop | 1030 | Spigot Position |
| 1008 | Door Safety Switch | 1031 | Conveyr Overcrnt |
| 1009 | M Code Finish*/APC: APC Pal Clamp | 1032 | Spare 4A |
| 1010 | Over Voltage (Mini-Mill - P.S. Fault) | 1033 | Spare 4B |
| 1011 | Low Air Pressure | 1034 | Spare 5A |
| 1012 | Low Lube Press. | 1035 | Spare 5B |
| 1013 | Regen Over Heat | 1036 | Spare 6A |
| 1014 | Drawbar Open | 1037 | Spare 6B |
| 1015 | Drawbar Closed | 1038 | Spare 7A |
| 1016 | Spare | 1039 | Spare 7B |
| 1017 | Spare | 1040 | Spare 8A |
| 1018 | Spare | 1041 | Spare 8B |
| 1019 | Spare | 1042 | Spare 9A (SMTC: Motor stop) |
| 1020 | Low Trans Oil Prs | 1043 | Spare 9B (SMTC: Origin) |
| 1021 | Spare 1/APC Door | 1044 | Spare 10A (SMTC: Clamp / Unclamp) |
| 1022 | Spare 2/APC Pin Clr #1 | 1045 | Spare 10B |

Inputs are numbered the same as the connections on the inputs printed circuit board. (*): active when = 0.

| # | Discrete Output Name | # | Discrete Output Name |
|---|---|---|---|
| 1100 | Powered Servos | 1120 | Unclamp Pre-Chrg |
| 1101 | Spare | 1121 | HTC Shuttle Out (Air Drive Shuttle in/ APC Door) |
| 1102 | Spare | 1122 | Brake 5TH Axis |
| 1103 | Spare | 1123 | CE Door Lock |
| 1104 | Brake 4th Axis | 1124 | M21 |
| 1105 | Coolant Pump On | 1125 | M22 |
| 1106 | Auto Power Off | 1126 | M23 (Air Drive Shuttle: Move Shuttle Out) |
| 1107 | Spind. Motor Fan | 1127 | TSC Coolant |
| 1108 | Move T.C. In/APC Chain Dr Fwd | 1128 | Green Beacon On |
| 1109 | Move T.C. Out/APC Chain Dr Rev | 1129 | Red Beacon On |
| 1110 | Rotate T.C. CW | 1130 | Enable Conveyor |
| 1111 | Rotate T.C. CCW | 1131 | Reverse Conveyor |
| 1112 | Spindle Hi Gear | 1132 | M-fin |
| 1113 | Spindle Low Gear | 1133 | Probe |
| # | **Discrete Output Name** | # | **Discrete Output Name** |
| 1114 | Unclamp Tool | 1134 | spare |
| 1115 | Spare | 1135 | spare |
| 1116 | Move Spigot CW | 1136 | spare |
| 1117 | Move Spigot CCW | 1137 | spare |
| 1118 | Pal Ready Light | 1138 | spare |
| 1119 | TSC Purge | 1139 | spare |

**NOTE:** The following inputs and outputs change for machines equipped with an APC.

| # | Discrete Output Name | # | Discrete Output Name |
|---|---|---|---|
| 1021 | APC CE Door | 1108 | APC Chain Drive Forward |
| 1022 | APC Pin CLR #1 | 1109 | APC Chain Drive Reverse |
| 1023 | APC Pin CLR #2 | 1121 | PAL Clamp |
| 1026 | APC PAL #2 Home | 1122 | Door |
| 1027 | APC PAL #1 Home | 1125 | APC Motor |
| 1046 | APC Door Closed | 1126 | Beeper |
| 1047 | Door Open | 1137 | APC Chain Drive Power Enable |
| 1048 | APC Pallet Clamped | 1138 | Air Blast |
| 1101 | Pallet Clamped | 1139 | APC Beeper |

The second page of diagnostic data is displayed using the Page Up and Page Down keys. It contains:

**Inputs 2**

| Name | Name | Name |
|---|---|---|
| X Axis Z Channel | X Overheat | X Cable Input |
| Y Axis Z Channel | Y Overheat | Y Cable Input |
| Z Axis Z Channel | Z Overheat | Z Cable Input |
| A Axis Z Channel | A Overheat | A Cable Input |
| B Axis Z Channel | B Overheat | B Cable Input |
| X Home Switch | X Drive Fault | Spindle Z Channel |
| Y Home Switch | Y Drive Fault | |
| Z Home Switch | Z Drive Fault | |
| A Home Switch | A Drive Fault | |
| B Home Switch | B Drive Fault | |

The following inputs and outputs pertain to the Haas Vector Drive. If it is not enabled, these will display a value of *. Otherwise, it will display a 1 or 0.

Spindle Forward
Spindle Reverse
Spindle Lock
Spindle at Speed*
Spindle Stopped
Spindle Fault
Spindle Locked
Spindle Cable Fault
Spindle Over Heat

The following Discrete Inputs/Outputs 2 are available when Parameter 278 SMNT bit 1,2 or 3 (Side-Mount Tool Changer) is set and Parameter 209 MCD RLY BRD (M-Code relay board) is On.

**Discrete Inputs 2**

| Name | Name |
|---|---|
| Spare Input 4A | Spare Input 8A |
| Spare Input 4B | Serp. Shot Pin* |
| Spare Input 5A | Motor Stop |
| Spare Input 5B | Origin |
| Spare Input 6A | Clamp/Unclamp |
| Spare Input 6B | Serp. Cam Count |
| Spare Input 7A | Spare Input 11A |
| Spare Input 7B | Spare Input 11 B |

**Discrete Outputs 2**

| Name | Name |
|---|---|

| | |
|---|---|
| Spare Output 32 | Spare Output 44 |
| Spare Output 33 | Spare Output 45 |
| Spare Output 34 | Spare Output 46 |
| Spare Output 35 | Spare Output 47 |
| Spare Output 36 | Spare Output 48 (SMTC: Serp. ATC Enable) |
| TC MTR SW | Spare Output 49 (SMTC: Serp. ATC Rev.) |
| Spare Output 38 | Spare Output 50 (SMTC: Serp. Carsl CW) |
| Spare Output 39 | Spare Output 51 (SMTC: Serp. Carsl CCW) |
| Spare Output 40 | Spare Output 52 (SMTC: Serp. Carsl Ena.) |
| Spare Output 41 | Spare Output 53 |
| Spare Output 42 | Spare Output 54 |
| Spare Output 43 | Spare Output 55 |

**Analog Data**

| Name | Description |
|---|---|
| DC BUSS | Voltage from Haas Vector Drive (if equipped) |
| uP TEMP | Displayed when Parameter 278 bit “µP Encl Temp” is set to 1) |
| SP LOAD | Spindle load in % |
| SP SPEED | Spindle rpm CW or CCW |
| RUN TIME | Machine total run time |
| TOOL CHANGES | Number of tool changes |
| VER X.XXX | Software version number |
| MOCON | MOCON software version |
| YY/MM/DD | Today’s date |
| MDL HS__ | Machine model |
| FV 2 11.0004 | Floppy version (Ethernet Firmware) |

| WIRE/ TERMINAL NUMBER | FUNCTION NAME: |
|---|---|
| | INCOMING POWER 195-260 VAC (353-488 VAC OPTIONAL) |
| L1 | INCOMING 195-260VAC, PHASE 1, TO CB1-1 |
| L2 | INCOMING 195-260VAC, PHASE 2, TO CB1-2 |
| L3 | INCOMING 195-260VAC, PHASE 3, TO CB1-3 |
| 71 | PROTECTED 195-260 VAC FROM MAIN CB1-4 TO K1-1 |
| 72 | PROTECTED 195-260 VAC FROM MAIN CB1-5 TO K1-2 |
| 73 | PROTECTED 195-260 VAC FROM MAIN CB1-6 TO K1-3 |
| 74 | 195-260 VAC FROM K1-4 TO XFORMER T1 |
| 75 | 195-260 VAC FROM K1-5 TO XFORMER T1 |
| 76 | 195-260 VAC FROM K1-6 TO XFORMER T1 |
| 77 | 230VAC PHASE 1 , FROM XFORMER T1 TO VECTOR/CHIP CONV |
| 78 | 230VAC PHASE 2 , FROM XFORMER T1 TO VECTOR/CHIP CONV |
| 79 | 230VAC PHASE 3 , FROM XFORMER T1 TO VECTOR/CHIP CONV |
| 90 | 115 VAC FROM TB2 (CB2 OUTPUT) TO IOPCB P33 |
| 91 | STEPPED-DOWN 115 VAC (FROM XFRMR T1) |
| 92 | STEPPED-DOWN 115 VAC (FROM XFRMR T1) |
| 93 | STEPPED-DOWN 115 VAC (FROM XFRMR T1) |
| 94 | SHIELD DRAIN |
| —- | 115 VAC FROM XFORMER T1 TO TB1 |
| 94 | STEPPED-DOWN 115 VAC (FROM XFRMR T1) |
| 95 | STEPPED-DOWN 115 VAC (FROM XFRMR T1) |
| 96 | STEPPED-DOWN 115 VAC (FROM XFRMR T1) |
| 90A | 115 VAC TO CRT |
| 91A | LEG 1 |
| 92A | LEG 2 |
| 93A | SHIELD DRAIN |
| 90B | 115 VAC TO HEAT EXCHANGER (CABINET DOOR FAN) |
| 91B | LEG 1 |
| 92B | LEG 2 |
| 93B | SHIELD DRAIN |
| 90C | 115 VAC TO CB4 |
| 91C | LEG 1 |
| 92C | LEG 2 |
| 93C | SHIELD DRAIN |
| 100 | M-FIN |
| 101 | SIGNAL |
| 102 | COMMON |
| 103 | SHIELD DRAIN |
| 100A | MFIN OUTPUT M21 (MCD RELAY BOARD M21) |
| 101A | UNSWITCHED LEG 1 |
| 102A | SWITCHED LEG 2 |
| 103A | SHIELD DRAIN |
| 110 | SPARE |

| | |
|---|---|
| 120 | TSC OVER TEMP THERMAL SENSOR (Vert) |
| 121 | THERMAL SENSOR SIGNAL |
| 122 | THERMAL SENSOR RETURN |
| 123 | SHIELD |
| 140 | 230VAC 3PH POWER TO CHIP CONVEYOR MOTOR |
| 141 | PHASE A 230VAC |
| 142 | PHASE B 230VAC |
| 143 | PHASE C 230VAC |
| 144 | STARTING WINDING 230VAC |
| 145 | STARTING WINDING 230VAC |
| 146 | SHIELD DRAIN |
| 140A | 230VAC 3PH POWER IN CONDUIT TO CHIP CONVEYOR (Lathe) |
| 141A | PHASE A 230VAC |
| 142B | PHASE B 230VAC |
| 143B | PHASE C 230VAC |
| 160 | 3PH 230VAC TO CHIP CONVEYOR CONTROLLER |
| 161 | PHASE A 230VAC |
| 162 | PHASE B 230VAC |
| 163 | PHASE C 230VAC |
| 164 | SHIELD DRAIN |
| 170 | AUTO OFF FUNCTION |
| 171 | UNSWITCHED LEG 1 |
| 172 | SWITCHED LEG 2 |
| 173 | SHIELD DRAIN |
| 180 | COOLANT SPIGOT DETENT SWITCH (Mill) SPARE (Lathe & Horiz) |
| 181 | SIGNAL |
| 182 | COMMON |
| 183 | SHIELD DRAIN |
| 190 | UNCLAMP FROM SPINDLE HEAD TO IOASM |
| 191 | INPUT 25 |
| 192 | DIGITAL RETURN |
| 193 | SHIELD DRAIN |
| 200 | COOLANT SPIGOT MOTOR (12VDC) (Mill) SPARE (Lathe & Horiz) |
| 201 | MOTOR + |
| 202 | MOTOR - |
| 210 | DATA CABLE TO 3” FLOPPY DISK DRIVE |
| 220 | SERVO BRAKE 115VAC (Mill) |
| 221 | 115VAC COMMON |
| 222 | 115VAC SWITCHED |
| 223 | SHIELD DRAIN |
| 230 | 5’th AXIS BRAKE (Vert & Horiz) TAILSTOCK FORWARD OPTION (Lathe) |
| 231 | 115VAC COMMON |
| 232 | 115VAC SWITCHED |
| 233 | SHIELD DRAIN |
| 240 | PALLETS UP & DOWN INPUTS (Vert & Horiz) BARFEEDER LOAD BAR-BARFEEDER LOAD Q (Lathe) |
| 241 | PALLETS UP (Vert & Horiz) END OF BAR (Lathe) |
| 242 | PALLETS DOWN (Vert & Horiz) LOADER OK (Lathe) |
| 243 | COMMON |
| 244 | SHIELD DRAIN |

250 VR SHUT IN / APC DOOR OPEN/ MD NIAGRA COOLANT ON (Vert option) HTC SHUTTLE/MORI MANUAL TOOL RELEASE (Horiz) TAILSTOCK REVERSE OPTION (Lathe)
251 LEG 1 (Mill) 115 VAC (Lathe)
252 LEG 2 (Mill) 115 VAC RETURN (Lathe)
253 SHIELD DRAIN

260 K210 CABLING FOR EC (Mill) SPARE (Lathe)
261 SWITCHED LED
262 UNSWITCHED LEG
263 SHIELD DRAIN

270 K111 CABLING FOR EC (Mill) TAILSTOCK RAPID OPTION (Lathe)
271 UNSWITCHED LEG 1 (Mill) 115 VAC (Lathe)
272 SWITCHED LEG 2 (Mill) 115 VAC RETURN (Lathe)
273 SHIELD DRAIN

280 RED/GREEN STATUS LIGHT WIRING
281 RED LAMP 115VAC
282 GREEN LAMP 115VAC
283 COMMON 115VAC
284 SHIELD DRAIN

290 115VAC TO XFORMER T2 10VAC OUTPUT (Horiz) CABLE OP LIGHT + SPINDLE MOTOR FAN (Lathe)
291 LEG 1 PRIMARY (Horiz) 115 VAC (Lathe)
292 LEG 2 PRIMARY (Horiz) 115 VAC RETURN (Lathe)
293 CENTER TAPPED (GROUND) (Horiz) SHIELD DRAIN (Lathe)
294 LEG 1 SECONDARY (Horiz)
295 LEG 2 SECONDARY (Horiz)

300 115VAC TO SPINDLE MOTOR FAN/OIL PUMP/OILER
301 LEG 1 115VAC PROTECTED
302 LEG 2 115VAC PROTECTED
303 SHIELD DRAIN

310 APC #2 DOOR OPEN (Vert) PC PALLET CW/CCW (Horiz)
AUTO DOOR CLUTCH - PARTS CATCHER (Lathe)

330 230V 3PH FROM CB6 TO K2 (LATHE HYDRAULICS)
331 PHASE 1 230VAC
332 PHASE 2 230VAC
333 PHASE 3 230VAC

340 230V 3PH FROM K2 TO HYDRAULIC PUMP (LATHE)
341 PHASE 1 230VAC
342 PHASE 2 230VAC
343 PHASE 3 230VAC

350 SERVO BRAKE RELEASE 115VAC (Mill) 115VAC HYD PUMP ENABLE (Lathe)
351 LEG 1 COMMON (Mill) 115VAC (Lathe)
352 LEG 2 SWITCHED (Mill) 115VAC RETURN (Lathe)
353 SHIELD DRAIN

390 115VAC TO 4’TH AXIS BRAKE (LATHE PART DOOR)
391 LEG 1 COMMON
392 LEG 2 SWITCHED
393 SHIELD DRAIN

410 TOOL CHANGER DOOR/APC CE DOOR OPEN (Mill) TAILSTOCK FOOT SWITCH (Lathe)
411 SIGNAL (Lathe)
412 RETURN (Lathe)
413 SHIELD DRAIN

420 APC #2 PIN CLR #1 / APC #2 PIN CLR #2 / APC #2 PAL #2 HOME / APC #2 PAL #1 HOME (Vert)
MORI ARM IN/OUT - SMTC ARM CW/CCW (Horiz)

| | |
|---|---|
| 430 | APC PALLET CLAMP MD PAL UP (Mill) APL LIGHT/BF EXTENDED PUSH (Lathe) |
| 440 | AUTO DOOR OPEN (Vert) SMTC CAGE DOOR OPEN - MORI ARM OUT (Horiz) DOOR OPEN (Lathe) |
| 450 | APC #2 CE DOOR OPEN (Vert) MORI ARM CW/CCW (Horiz) STEADY REST FOOT SWITCH (Lathe) |
| 460 | APC #2 DOOR CLOSED - APC #2 DOOR OPEN (Vert) MORI SLIDE 1/2 WAY - MORI SLIDE LEFT (Horiz) APL ROTOR MARK - APL ROTOR HOME (Lathe) |
| 470 | SMTC MOTOR STOP (Vert) SMTC SHUTTLE MARK (Horiz) |
| 490 | ALL BRUSHLESS AXIS SERVO MOTOR DRIVE POWER CABLE |
| 491 | A PHASE |
| 492 | B PHASE |
| 493 | C PHASE |
| 494 | GROUND |
| 490A | A AXIS MOTOR POWER (Vert) 320VDC FROM SPINDLE DRIVE TO AMPLIFIERS (Horiz & Lathe) |
| 490B | B AXIS MOTOR POWER (Vert) 320VDC FROM AMPLIFIER TO SERVO POWER SUPPLY (Horiz & Lathe) |
| 490X | X AXIS MOTOR POWER |
| 490Y | Y AXIS MOTOR POWER |
| 490Z | Z AXIS MOTOR POWER |
| 491A | HIGH VOLT P1/+ RED (Horiz & Lathe) |
| 492A | HIGH VOLT N/- BLACK (Horiz & Lathe) |
| 493A | SHIELD DRAIN |
| 491B | HIGH VOLT + RED (Horiz & Lathe) |
| 492B | HIGH VOLT - BLACK (Horiz & Lathe) |
| 500 | OVERTEMP SENSOR FROM SPINDLE MOTOR |
| 501 | OVERTEMP WIRE 1 |
| 502 | OVERTEMP WIRE 2 |
| 503 | SHIELD DRAIN |
| 510 | RELAY CARD 1 DRIVE CABLE - 16 WIRE RIBBON |
| 520 | RELAY CARD 2 DRIVE CABLE - 16 WIRE RIBBON |
| 530 | RELAY CARD 3 DRIVE CABLE - 16 WIRE RIBBON |
| 540 | RELAY CARD 4 DRIVE CABLE - 16 WIRE RIBBON |
| 550 | INPUTS CARD CABLE (MOCON P10) 34 WIRE RIBBON |
| 570 | LOW VOLTAGE BRUSHLESS AMPLIFIER POWER CABLE ASSEMBLY (Horiz & Lathe) |
| 571 | +12VDC #22 |
| 572 | COMMON |
| 573 | - 12VDC #22 |
| 610 | X AXIS HAAS AMPLIFIER CABLE TO MOTOR CONTROLLER BOARD |
| 610-1 | +A CHANNEL |
| 610-2 | ANALOG GROUND |
| 610-3 | +B CHANNEL |
| 610-4 | ANALOG GROUND |
| 610-5 | ENABLE |
| 610-6 | LOGIC GROUND |
| 610-7 | FAULT |
| 610-8 | LOGIC GROUND |
| 610-9 | NOT USED |
| 610-10 | SHIELD/ANALOG GROUND |
| 620 | Y AXIS HAAS AMPLIFIER CABLE TO MOTOR CONTROLLER BOARD (SAME AS 610-1 THRU 610-10) (Mill) |
| 630 | Z AXIS HAAS AMPLIFIER CABLE TO MOTOR CONTROLLER BOARD (SAME AS 610-1 THRU 610-10) |

| | |
|---|---|
| 640 | A AXIS HAAS AMPLIFIER CABLE TO MOTOR CONTROLLER BOARD (SAME AS 610-1 THRU 610-10) (Lathe) |
| 640A | A AXIS HAAS AMPLIFIER CABLE TO MOTOR CONTROLLER BOARD (SAME AS 610-1 THRU 610-10) (Mill) |
| 640B | B AXIS HAAS AMPLIFIER CABLE TO MOTOR CONTROLLER BOARD (SAME AS 610-1 THRU 610-10) (Mill) |
| 640C | C AXIS HAAS VECTOR CURRENT COMMAND CABLE TO MOTOR CONTROLLER BD. (SAME AS 610-1 THRU 610-10) (Vert) |
| 640C | HAAS VECTOR DRIVE CURRENT COMMAND CABLE (Horiz & Lathe) |
| 640C-1 | A PHASE |
| 640C-2 | B PHASE |
| 640C-3 | ENABLE |
| 640C-4 | FAULT |
| 640C-5 | 320VDC VOLTAGE MONITOR |
| 640C-6 | A PHASE RETURN |
| 640C-7 | B PHASE RETURN |
| 640C-8 | DIGITAL GROUND |
| 640C-9 | FAULT RETURN |
| 640C-10 | ANALOG GROUND |
| 650 | THREE PHASE POWER TO SPINDLE MOTOR |
| 651 | LEG 1 OF 230VAC |
| 652 | LEG 2 |
| 653 | LEG 3 |
| 654 | SHIELD DRAIN |
| 650A | THREE PHASE POWER TO SPINDLE MOTOR |
| 651A | LEG 1 OF 230VAC |
| 652A | LEG 2 |
| 653A | LEG 3 |
| 654A | SHIELD DRAIN |
| 650B | THREE PHASE POWER TO SPINDLE MOTOR |
| 651B | LEG 1 OF 230VAC |
| 652B | LEG 2 |
| 653B | LEG 3 |
| 654B | SHIELD DRAIN |
| 660 | X-AXIS ENCODER CABLE |
| 660-1 | LOGIC RETURN (D GROUND) |
| 660-2 | ENCODER A CHANNEL |
| 660-3 | ENCODER B CHANNEL |
| 660-4 | +5 VDC |
| 660-5 | ENCODER Z CHANNEL (OR C) |
| 660-6 | HOME/LIMIT SW |
| 660-7 | OVERHEAT SWITCH |
| 660-8 | ENCODER A* |
| 660-9 | ENCODER B* |
| 660-10 | ENCODER Z* (OR C*) |
| 660-11 | X HALL A (NOT USED) |
| 660-12 | X HALL B (NOT USED) |
| 660-13 | X HALL C (NOT USED) |
| 660-14 | X HALL D (NOT USED) |
| 660-15 | SHIELD DRAIN |
| 660-16 | (NOT USED) |
| 670 | Y-AXIS ENCODER CABLE (SAME AS 660-1 THRU 660-16) (Mill) |
| 680 | Z-AXIS ENCODER CABLE (SAME AS 660-1 THRU 660-16) |

| | |
|---|---|
| 690 | A-AXIS ENCODER CABLE (SAME AS 660-1 THRU 660-16) (Vert & Lathe) |
| 690A | A-AXIS ENCODER CABLE (SAME AS 660-1 THRU 660-16) (Horiz) |
| 690B | B-AXIS ENCODER CABLE (SAME AS 660-1 THRU 660-16) (Mill) |
| 690C | C-AXIS ENCODER CABLE (SAME AS 660-1 THRU 660-16) (Mill) |
| 700 | KEYBOARD CABLE - 34 WIRE RIBBON WITH IDC (FROM VIDEO P4 TO KBIF P1) |
| 710 | APC #1 PALLET READY 1 / APC #1 PALLET READY 2 (Vert) |
| | P-COOL/BF COLLET OPEN - BF COLLET CLOSE (Horiz) APL GRIP 1,2 (Lathe |
| 711 | FORWARD COMMAND (Vert) |
| 712 | REVERSE COMMAND (Vert) |
| 713 | RESET COMMAND (Vert) |
| 714 | COMMON (Vert) |
| 715 | SHIELD DRAIN |
| 720 | ANALOG SIGNAL FROM MOCON TO SPINDLE DRIVE TO LOAD METER (BRUSH SYSTEMS) |
| 721 | 0 TO +10 VOLTS SPEED COMMAND (SPINDLE DRIVE CN1-1) |
| 722 | SPEED COMMAND REFERENCE (A GROUND) (CN1-17) |
| 723 | SHIELD DRAIN |
| 730 | POWER METER FROM SPINDLE DRIVE TO KBIF (Vert) (BRUSH SYSTEMS) |
| 731 | METER + |
| 732 | METER - |
| 733 | SHIELD DRAIN |
| 730A | POWER METER FROM KBIF TO METER (Vert) (BRUSH SYSTEMS) |
| 733 | METER + AFTER TRIM POT |
| 734 | METER - AFTER TRIM POT |
| 734 | METER - AFTER TRIM POT |
| 730B | ANALOG SIGNAL FROM SPINDLE DRIVE LOAD MONITOR (Vert) (BRUSH SYSTEMS) |
| 731 | SIGNAL 0.5V |
| 732 | GROUND |
| 740 | POWER ON/OFF CABLE TO FRONT PANEL |
| 741 | POWER ON SWITCH LEG 1 (24 VAC) |
| 742 | POWER ON SWITCH LEG 2 #24 N.O. |
| 743 | POWER OFF SWITCH LEG 1 (24 VAC) |
| 744 | POWER OFF SWITCH LEG 2 #24 N.C. |
| 745 | SHIELD DRAIN |
| 750 | JOG-CRANK DATA CABLE (REM JOG SIDE CONNECTION) |
| 750-1 | LOGIC RETURN (D GROUND) 0VDC |
| 750-2 | ENCODER A CHANNEL |
| 750-3 | ENCODER B CHANNEL |
| 750-4 | +5 VDC |
| 750-5 | NC (Vert) JUMPER TO 750-1 (0 VDC) (Horiz & Lathe) |
| 750-6 | X-AXIS |
| 750-7 | Y-AXIS |
| 750-8 | N/C (Vert) ENCODER A* CHANNEL (Horiz & Lathe) |
| 750-9 | N/C (Vert) ENCODER B* CHANNEL (Horiz & Lathe) |
| 750-10 | N/C (Vert) JUMPER TO 750-4 (+5 VDC) (Horiz & Lathe) |
| 750-11 | Z-AXIS |
| 750-12 | A-AXIS |
| 750-13 | X 10 |
| 750-14 | X 1 |
| 750-15 | SHIELD DRAIN |
| 750-16 | N/C (Vert) NOT USED (Horiz & Lathe) |

| | |
|---|---|
| 750A | JOG HANDLE DATA CABLE (Horiz & Lathe) |
| 751A | +5 VDC |
| 752A | 0 VDC |
| 753A | ENCODER A CHANNEL |
| 754A | ENCODER B CHANNEL |
| 755A | SHIELD DRAIN |
| 750B | JOG HANDLE DATA CABLE (Horiz) |
| 750B-1 | +5 VDC JOG HANDLE |
| 750B-2 | 0VDC |
| 750B-3 | JOG HANDLE A CHANNEL |
| 750B-4 | JOG HANDLE A* CHANNEL |
| 750B-5 | JOG HANDLE B CHANNEL |
| 750B-6 | JOG HANDLE B* CHANNEL |
| 760 | MONITOR VIDEO DATA CABLE (FROM VIDEO P3 TO CRT) |
| 770 | EMERGENCY STOP INPUT CABLE |
| 771 | SIGNAL (INPUT 8) |
| 772 | RETURN (D GROUND) (65) |
| 773 | SHIELD DRAIN |
| 770A | SECOND E-STOP INPUT / COUNTERBALANCE (Horiz) / BARFEEDER OPTION (Lathe) |
| 771A | SIGNAL |
| 772A | RETURN (D GROUND) |
| 773A | SHIELD DRAIN |
| 770B | THIRD E-STOP INPUT FOR APC (REMOTE CONTROL PANEL) (Vert) |
| 790 | APC PIN CLR #1 / MD OP DOOR OPEN - APC PIN CLR #2 / MD OP DOOR CLOSED (Vert) PALLET CHANGER CW/CCW (Horiz) SPARE INPUTS PROBE HOME OPTION (Lathe) |
| 791 | SPARE 1 (Vert & Lathe) PALLET CW (Horiz) |
| 792 | SPARE 2 (Vert & Lathe) PALLET CCW (Horiz) |
| 793 | COMMON |
| 794 | SHIELD DRAIN |
| 800 | 10VAC TO PALLET READY LAMP (Horiz) |
| 801 | UNSWITCHED LEG 1 |
| 802 | SWITCHED LEG 2 |
| 803 | SHIELD DRAIN |
| 800A | LAMP SWITCH JUMPER (Horiz) |
| 801A | JUMPER TO 802A |
| 802A | JUMPER TO 801A |
| 810 | TOOL CHANGER MOTORS |
| 811 | TURRET MOTOR + (IO P30-2 TO P6-J) |
| 812 | TURRET MOTOR - (IO P30-1 TO P6-I) |
| 813 | SHIELD DRAIN |
| 810A | TOOL CHANGER MOTORS |
| 811A | SHUTTLE MOTOR + |
| 812A | SHUTTLE MOTOR - |
| 813A | SHIELD DRAIN |
| 820 | TOOL CHANGER STATUS |
| 821 | LOGIC RETURN (Vert) TOOL CHANGER IN (Horiz) TURRET UNCLAMPED (Lathe) |
| 822 | GENEVA MARK (INPUT 5 TO P6-G) (Vert) TOOL CHANGER OUT (Horiz) TURRET CLAMPED (Lathe) |
| 823 | TOOL #1 (INPUT 3 TO P6-E) (Vert) MAIN DRAWBAR UP (Horiz) UNUSED (Lathe) |
| 824 | SHUTTLE IN (INPUT 1 TO P6-C) (Vert) MAIN DRAWBAR DOWN (Horiz) PART LOAD (Lathe) |
| 825 | SHUTTLE OUT (INPUT 2 TO P6-D) (Vert) COMMON (Horiz & Lathe) |
| 826 | SHIELD DRAIN |

830 OVERHEAT THERMOSTAT
831 OVERHEAT SIGNAL (INPUT 14)
832 OVERHEAT RETURN (D GROUND) (65)
833 SHIELD DRAIN

840 CIRCUIT BREAKER FOR 160 VDC (Vert)
841 LEG 1 (TO 81)
842 LEG 2
843 SHIELD DRAIN

850 SERIAL PORT #1 TO SERIAL KEYBOARD INTERFACE CABLE

850A SERIAL PORT #2 INTERFACE CABLE - AUXILIARY PORT TO ROTARY CONTROLLER

860 +12V/+5V/Gnd POWER CABLES (Vert) +5V/+12V/-12V/Gnd FROM MAIN POWER SUPPLY (Horiz & Lathe)
861 +12 VOLTS (Vert) +5 VOLTS (Horiz & Lathe)
862 -12 VOLTS FROM LOW V SUPPLY TO 68020 PCB (Vert) LOGIC POWER RETURN (Horiz & Lathe)
863 +5 VOLTS (Vert) LOGIC POWER RETURN (Horiz & Lathe)
864 -5 VOLTS (Vert) +12 VOLTS (Horiz & Lathe)
865 LOGIC POWER RETURN (D GROUND) (Vert) -12 VOLTS (Horiz & Lathe)
866 POWER GOOD SIGNAL FROM SUPPLY (Vert)

860A 12 VOLT POWER TO IOPCB (Vert & Lathe) 12 VDC POWER TO M CODE RELAY BOARD (Horiz)
861A +12 VOLTS
862A LOGIC POWER RETURN (D GROUND)
863A SHIELD DRAIN

860B +5 POWER TO 3” FLOPPY DRIVE (Vert & Lathe)

860C +5,+12,-12 POWER TO 68030 (Vert & Lathe) 12 VDC POWER TO MONITOR FAN (Horiz)
861A +12 VOLTS
862A LOGIC POWER RETURN (D GROUND)
863A SHIELD DRAIN

870 115VAC TO OILER (Vert & Lathe)
871 115VAC LEG 1
872 115VAC LEG 2
873 SHIELD DRAIN

880A HIGH/LOW GEAR UNCLAMP/LOCK SOLENOID POWER (Vert)
115 VAC TO SPINDLE HEAD SOLENOIDS (Horiz & Lathe)
881A 115 VAC SOLENOID COMMON (IO P12-5) (Vert) WYE-DELTA SWITCH COMMAND (Horiz)
SPINDLE LOCK (Lathe
882A HIGH GEAR SOLENOID (IO P12-4) (Vert) TOOL UNCLAMP (Horiz & Lathe)
883A LOW GEAR SOLENOID (IO P12-3)
884A TOOL UNCLAMP SOLENOID (IO P12-2) (Vert) HIGH GEAR (Horiz & Lathe)
885A SPINDLE LOCK SOLENOID (IO P12-1) (Vert) 115 VAC COMMON (Horiz & Lathe)
886A PRE-CHARGE SOLENOID #18 (IO P12-7) (Vert) SHIELD DRAIN (Horiz & Lathe)
887A SHIELD DRAIN (Vert) PRECHARGE (Horiz & Lathe)

880B TRANSMISSION HIGH/LOW GEAR SOLENOIDS FOR LATHE (Vert & Lathe)
881B 115 VAC SOLENOID COMMON (IO P12-5)
882B HIGH GEAR SOLENOID (IO P12-4)
883B LOW GEAR SOLENOID (IO P12-3)
884B SHIELD DRAIN

890 SPINDLE STATUS SWITCHES
891 SIGNAL RETURN (D GROUND) (Vert) HIGH GEAR (Horiz & Lathe)
892 HIGH GEAR (Vert) LOW GEAR (Horiz & Lathe)
893 LOW GEAR (Vert) TOOL UNCLAMPED (Horiz & Lathe)
894 TOOL UNCLAMPED (Vert) TOOL CLAMPED (Horiz & Lathe)
895 TOOL CLAMPED (Vert) SPARE (Horiz) SPINDLE LOCKED (Lathe)
896 SPINDLE LOCKED (Vert) COMMON (Horiz & Lathe)
897 SHIELD DRAIN

| | |
|---|---|
| 900 | LOW COOLANT STATUS (Mill) SPARE (Lathe) |
| 901 | LOW COOLANT SIGNAL |
| 902 | LOW COOLANT RETURN (D GROUND) |
| 903 | SHIELD DRAIN |
| 910 | 115 VAC CIRCUIT BREAKER TO SOLENOIDS |
| 911 | LEG 1 |
| 912 | LEG 2 |
| 913 | SHIELD DRAIN |
| 910A | 115VAC FROM CB4 ON MAIN POWER DIST. (Mill) SPARE 115 VAC (Lathe) |
| 910B | 115VAC TO SERVO FAN |
| 910C | 115VAC TO DELTA/WYE COIL (Vert & Lathe) 115VAC TO PURGE SOLENOID (Horiz) |
| 910D | 115VAC TO WORK LIGHT (Vert) 115 VAC TO PALLET ALARM (Horiz) 115 VAC TO PART CATCHER (Lathe) |
| 920 | REGENERATIVE LOAD RESISTOR FOR SERVO (Vert) |
| 921 | LEG 1 |
| 922 | LEG 2 |
| 923 | SHIELD DRAIN |
| 930 | FUSED 230 VAC FOR COOLANT PUMP |
| 931 | LEG 1 |
| 932 | LEG 2 |
| 933 | SHIELD DRAIN |
| 940 | 230 VAC TO COOLANT PUMP |
| 941 | LEG 1 (P7-A) |
| 942 | LEG 2 (P7-F) |
| 943 | SHIELD DRAIN |
| 940A | 230 VAC SINGLE PHASE POWER TO THROUGH SPINDLE COOLANT PUMP (Horiz) |
| 941A | LEG 1 |
| 942A | LEG 2 |
| 943A | SHIELD DRAIN |
| 950 | LOW AIR PRESSURE/OIL LUBE SENSOR |
| 951 | LOW AIR SIGNAL (INPUT 12) |
| 952 | LOW AIR/OIL RETURN (D GROUND) (65) (Vert) LOW OIL LUBE SIGNAL (Horiz & Lathe) |
| 953 | LOW OIL PRESSURE SWITCH FOR VERTICAL TRANSMISSION (Vert) COMMON (Horiz & Lathe) |
| 954 | SHIELD DRAIN |
| 950A | LOW HYDRAULIC PRESSURE SWITCH FOR LATHE |
| 952 | LOW HYDRAULIC RETURN (D GROUND) |
| 953 | LOW HYD PRESSURE SWITCH FOR VERTICAL TRANSMISSION |
| 954 | SHIELD DRAIN |
| 960 | LOW LUB/DOOR OPEN SENSORS (Vert) LOW TRANSMISSION OIL LUBE (Horiz) LOW HYD PRESSURE (Lathe) |
| 961 | LOW LUB SIGNAL (Vert) LOW TRANSMISSION OIL LUBE SIGNAL (Horiz) LOW HYD PRESSURE (Lathe) |
| 962 | LOW LUB RETURN (D GROUND) (65) |
| 963 | SHIELD DRAIN |
| 970 | LOW VOLTAGE SENSOR (Vert) VECTOR DRIVE OVER-VOLT SENSOR (Horiz & Lathe) |
| 971 | LOW VOL SIGNAL (Vert) OVERVOLTAGE SIGNAL (Horiz & Lathe) |
| 972 | LOW VOL RETURN (D GROUND) (Vert) OVERVOLTAGE RETURN (Horiz & Lathe) |
| 973 | SHIELD DRAIN |
| 980 | VOLTAGE MONITOR |
| 981 | VOLTAGE MONITOR 0 TO |
| 982 | VOLTAGE MON RET |
| 983 | SHIELD DRAIN |

| | |
|---|---|
| 990 | HOME SENSORS |
| 991 | X HOME SWITCH (Vert) COMMON (DATA GROUND) Horiz & Lathe) |
| 992 | Y HOME SWITCH (LATHE TAIL STOCK) (Vert) X-AXIS HOME SWITCH (Horiz & Lathe) |
| 993 | Z HOME SWITCH (Vert) Y-AXIS HOME SWITCH (Horiz & Lathe) |
| 994 | HOME SWITCH RETURN (Vert) Z-AXIS HOME SWITCH (Horiz & Lathe) |
| 995 | SHIELD DRAIN |
| 1000 | SPINDLE ENCODER CABLE (LATHE TAIL STOCK)(BRUSH SYSTEMS) (Vert) |
| 1001 | LOGIC RETURN (D GROUND) |
| 1002 | ENCODER A CHANNEL |
| 1003 | ENCODER B CHANNEL |
| 1004 | +5 VDC |
| 1005 | ENCODER Z CHANNEL |
| 1006 | SHIELD DRAIN |
| 1000 | SPINDLE ENCODER CABLE (MOCON SIDE CONNECTION) (Horiz & Lathe) |
| 1000-1 | LOGIC RETURN (D GROUND) |
| 1000-2 | ENCODER A CHANNEL |
| 1000-3 | ENCODER B CHANNEL |
| 1000-4 | +5 VDC |
| 1000-5 | ENCODER Z CHANNEL |
| 1000-6 | NOT USED |
| 1000-7 | NOT USED |
| 1000-8 | ENCODER A* CHANNEL |
| 1000-9 | ENCODER B* CHANNEL |
| 1000-10 | ENCODER Z* CHANNEL |
| 1000-11 | NOT USED |
| 1000-12 | NOT USED |
| 1000-13 | NOT USED |
| 1000-14 | NOT USED |
| 1000-15 | SHIELD DRAIN |
| 1000-16 | NOT USED |
| 1010 | AUX FRONT PANEL CABLE (HS-1R/RP) |
| 1011 | COMMON FOR CYCLE START AND FEED HOLD RETURN |
| 1012 | CYCLE START |
| 1013 | PART READY |
| 1014 | COMMON FOR PALLET ROTATE AND PART READY |
| 1015 | PALLET ROTATE |
| 1016 | FEED HOLD |
| 1017 | SHIELD DRAIN |
| 1020 | SPINDLE TEMPERATURE SENSOR CABLE |
| 1021 | SIGNAL |
| 1022 | ANALOG RETURN |
| 1023 | +5 VOLTS TO SENSOR |
| 1024 | SHIELD GROUND |
| 1030 | SPINDLE LOAD RESISTOR |
| 1031 | REGEN LOAD RESISTOR FOR SPINDLE DRIVE (B1) |
| 1032 | REGEN LOAD RESISTOR FOR SPINDLE DRIVE (B2) |
| 1033 | SHIELD DRAIN |
| 1040 | 115 VAC TO MIKRON DOOR INTERLOCK SWITCH (OR HORIZONTAL PART READY LAMP (Vert)) |
| 1041 | LEG 1 |
| 1042 | LEG 2 |
| 1043 | SHIELD DRAIN |
| 1050 | DOOR SWITCH WIRING THRU SUPPORT ARM |
| 1051 | DOOR OPEN SIGNAL (INPUT 9) |
| 1052 | DOOR OPEN RETURN (D GROUND) (65) |
| 1053 | SHIELD DRAIN |

| | |
|---|---|
| 1060 | GROUND FAULT DETECTION SENSE INPUT |
| 1061 | + INPUT FROM SENSE RESISTOR |
| 1062 | - INPUT FROM SENSE RESISTOR |
| 1063 | SHIELD DRAIN |
| 1070 | SKIP INPUT FROM SENSOR (Vert & Lathe) PROBE INPUT OPTION (Horiz) |
| 1071 | LOGIC COMMON (Vert & Lathe) PROBE SIGNAL (Horiz) |
| 1072 | SKIP SIGNAL (Vert & Lathe) LOGIC COMMON (Horiz) |
| 1073 | SHIELD DRAIN |
| 1070A | PROBE OUTPUT (MCD RELAY BOARD M22) (OPTION) (Horiz) |
| 1071A | UNSWITCHED LEG 1 |
| 1072A | SWITCHED LEG 2 |
| 1073A | SHIELD DRAIN |

Shown below are three types of commonly used cable connectors. **They are shown as seen when plugged into the pc board.** These diagrams are to aid in locating the pins for troubleshooting.

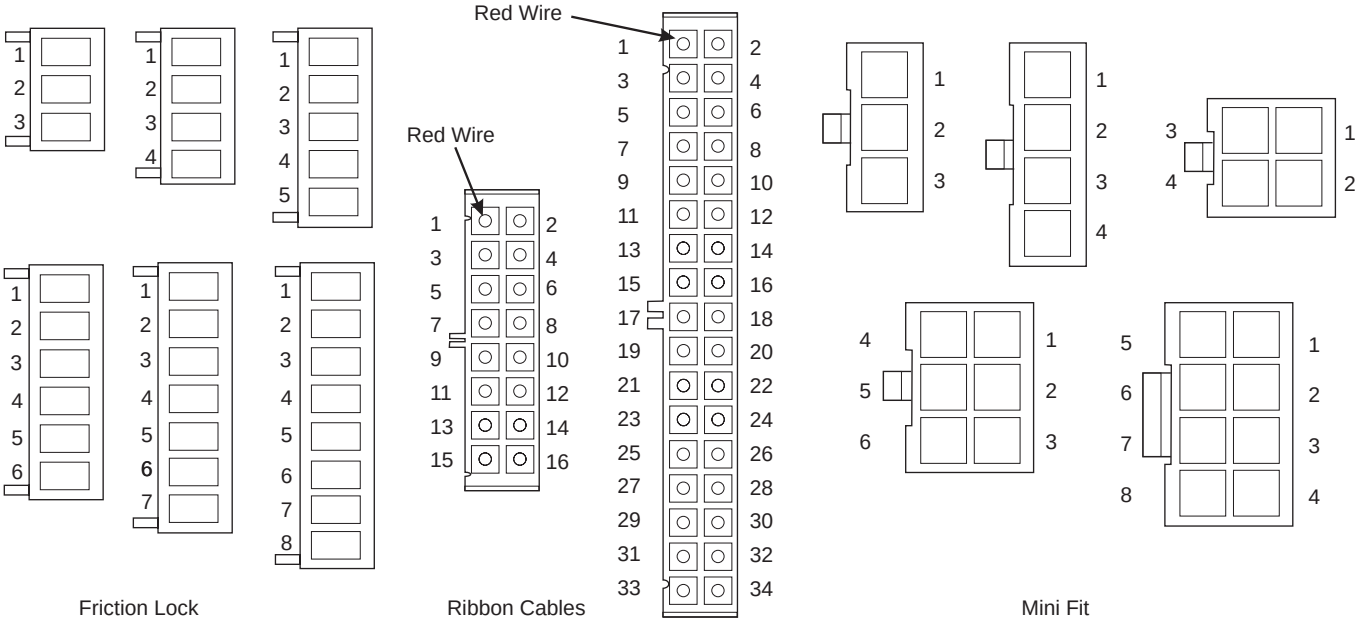


**NOTE:** The numbering sequence is the same regardless of the number of pins.

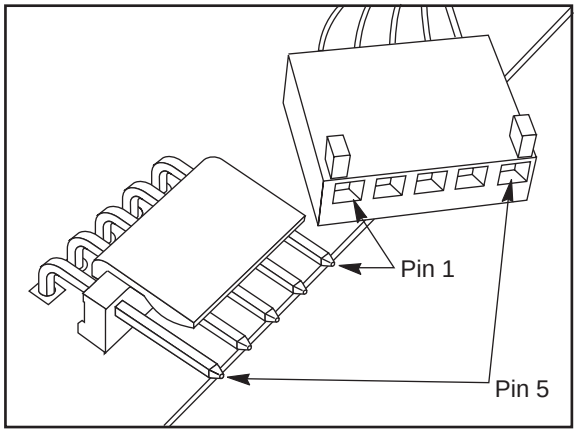


*Connection Example*

## Microprocessor PCB

Plug numbers and descriptions are on the next page

### 1MB

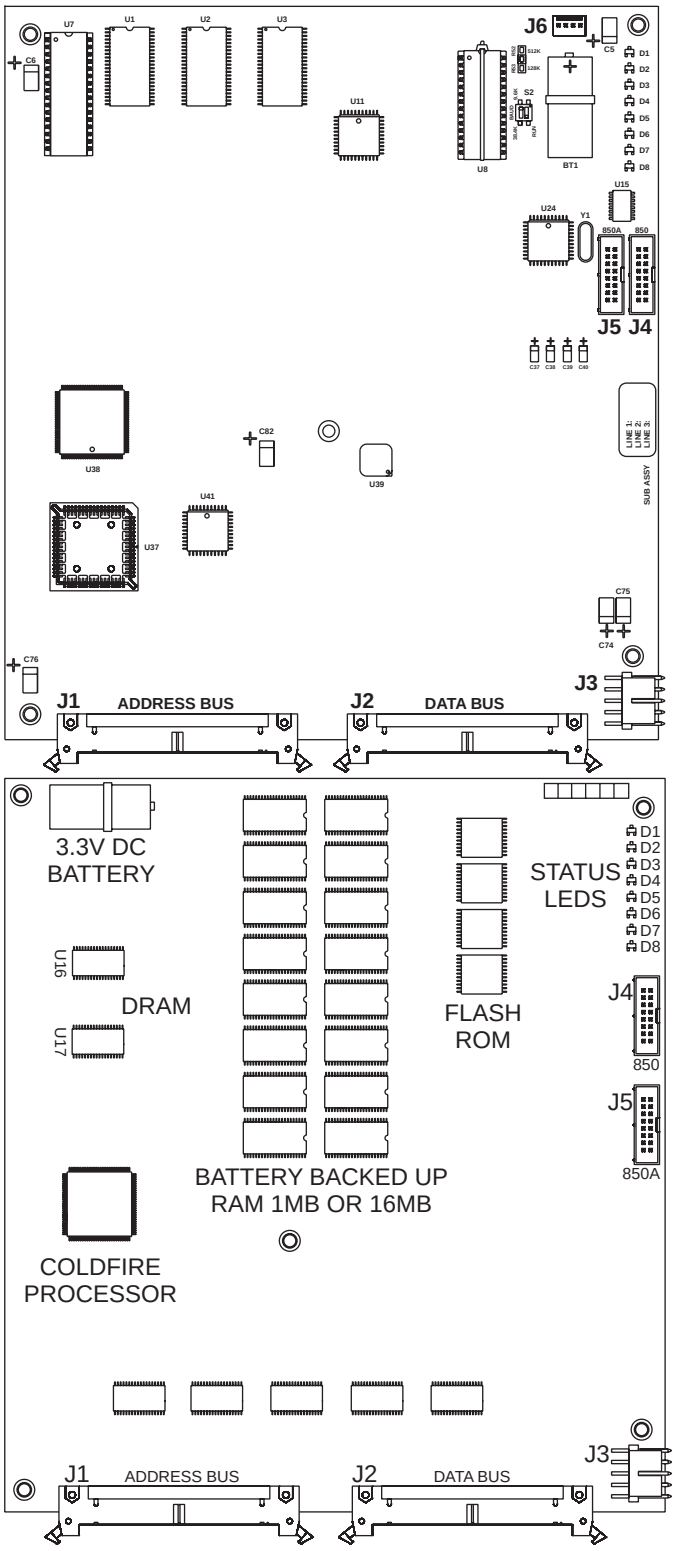


*Coldfire*

### 16MB

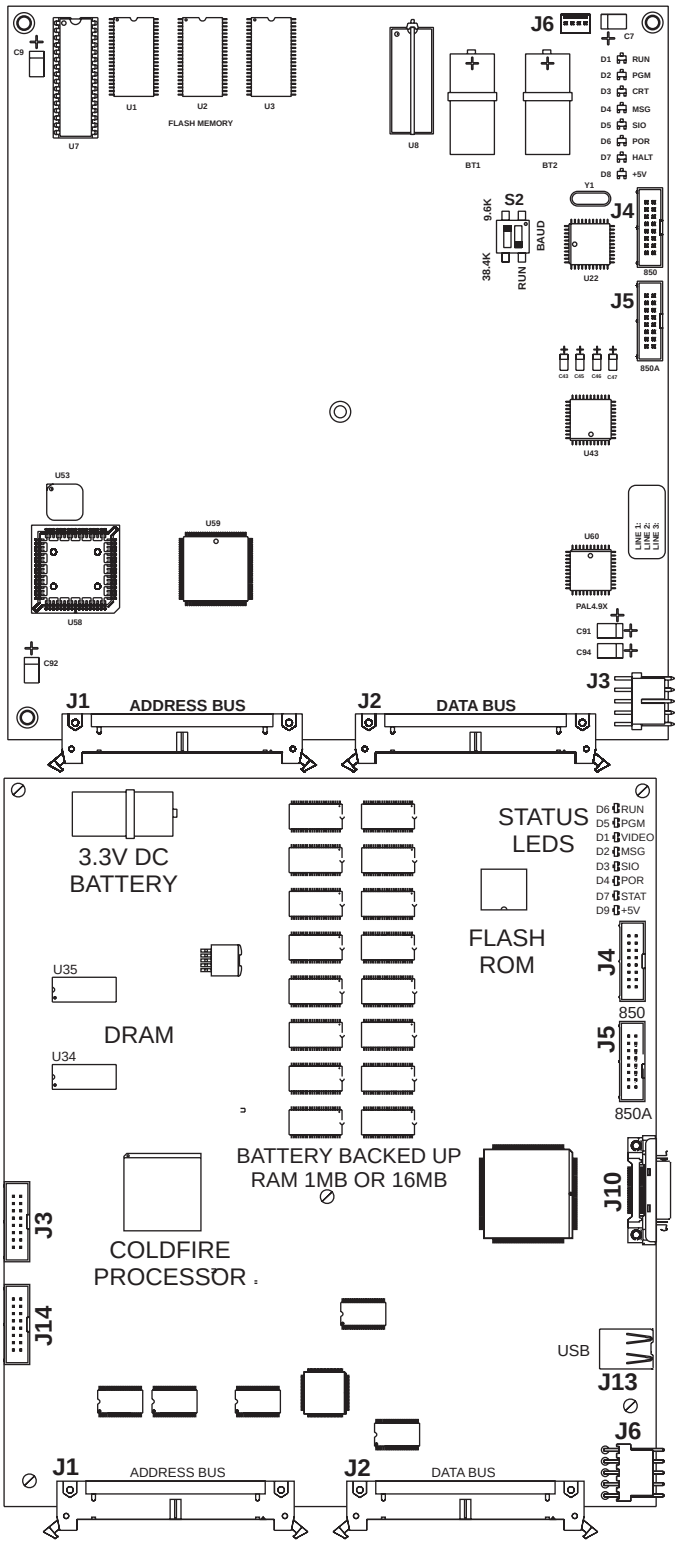


*Coldfire 2 (CF2)*

| PLUG # | CABLE # | SIGNAL NAME | ⇨ TO ⇨ | LOCATION | PLUG # |
|---|---|---|---|---|---|
| J1 ADDRESS | | ADDRESS BUSS | | MOCON-MOTIF | ____ |
| J2 DATA | | DATA BUSS | | MOCON-MOTIF | ____ |
| J3 (CF2) | | SERIAL DATA | | | |
| J3, J6 (CF2) | 860 | LOW VOLTAGE | | <FROM>PSUP PCB | ____ |
| J4 | 850 | KEYBOARD DATA | | KEYBOARD INT. | ____ |
| J5 PORT 2 | 850A | SERIAL PORT #2 AUX PORT | | AUX SERIAL PORT | ____ |
| J6 | | AUX BATTERY INPUT | | | |
| J10 | | VIDEO SIGNAL | | LCD | |
| J13 | | USB DATA | | | |
| J14 | | NOT USED | | | |

## Servo System Block Diagram

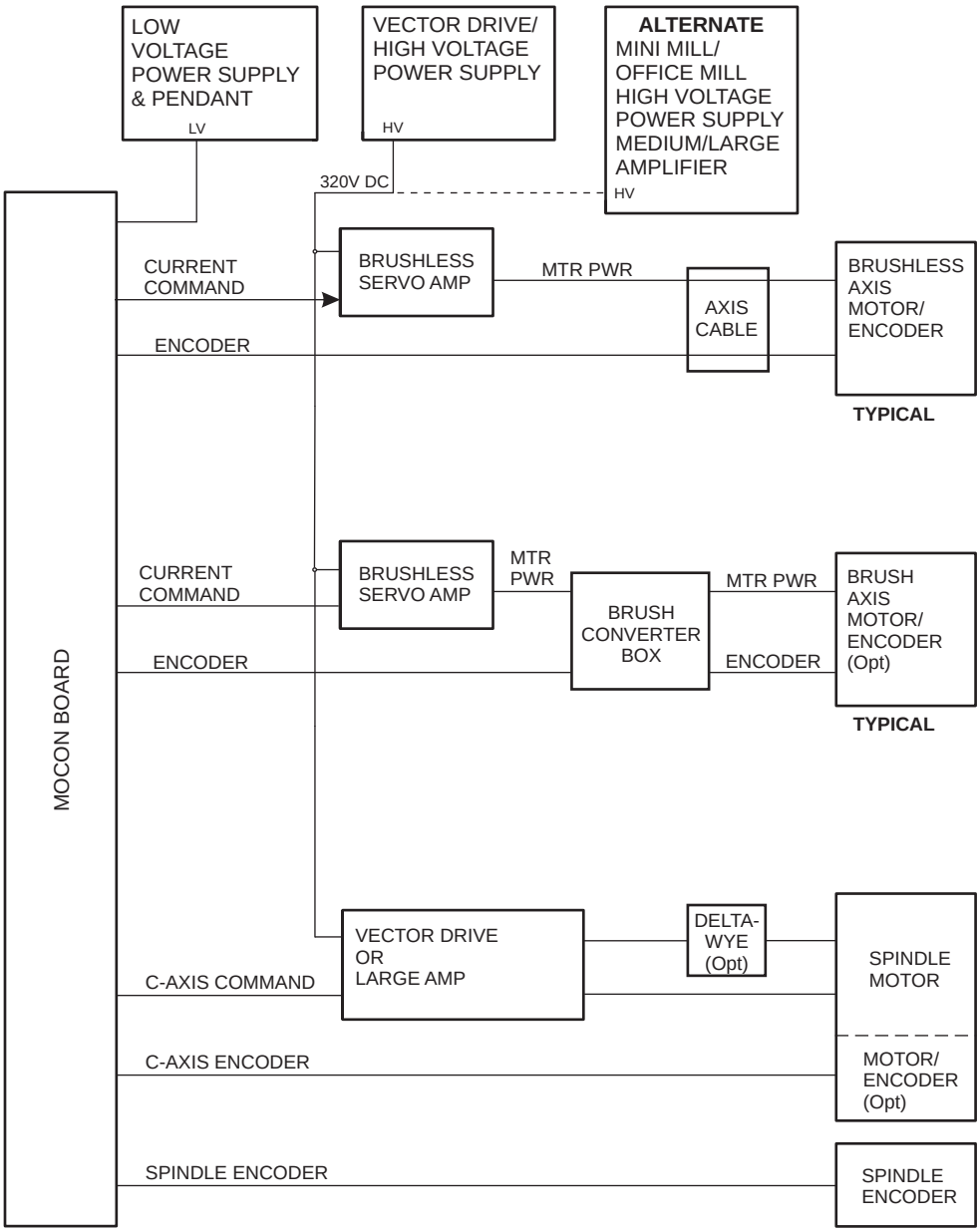

## Brushless Servo Amplifier (P/N 32-5550F)

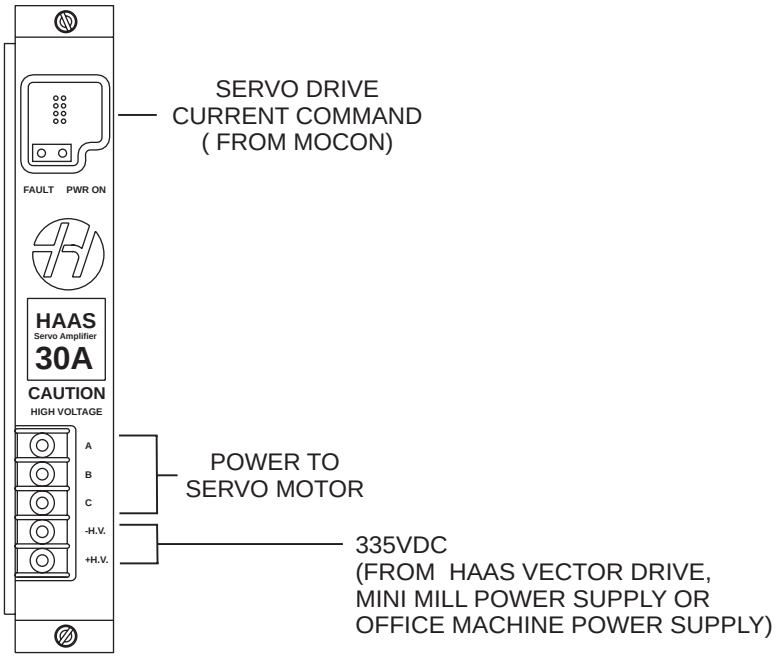


| PLUG # | CABLE # | SIGNAL NAME | ⇨ TO ⇨ | LOCATION | PLUG # |
|---|---|---|---|---|---|
| **X AXIS AMP** | | | | | |
| TB A, B, C | ——- | MOTOR DRIVE | | X SERVO MOTOR | ——- |
| SERVO PLUG | 610 | X DRIVE SIGNAL | | MOCON PCB | P2 |
| TB -HV +HV | ——- | 335VDC | | SPINDLE DRIVE | ——- |
| **Y AXIS AMP** | | | | | |
| TB A, B, C | ——- | MOTOR DRIVE | | Y SERVO MOTOR | ——- |
| SERVO PLUG | 620 | Y DRIVE SIGNAL | | MOCON PCB | P3 |
| TB -HV +HV | ——- | 335VDC | | SPINDLE DRIVE | ——- |
| **Z AXIS AMP** | | | | | |
| TB A, B, C | ——- | MOTOR DRIVE | | Z SERVO MOTOR | ——- |
| SERVO PLUG | 630 | Z DRIVE SIGNAL | | MOCON PCB | P4 |
| TB -HV +HV | ——- | 335VDC | | SPINDLE DRIVE | ——- |
| **A AXIS AMP** | | | | | |
| TB A, B, C | ——- | MOTOR DRIVE | | A SERVO MOTOR | ——- |
| SERVO PLUG | 640 | A DRIVE SIGNAL | | MOCON PCB | P5 |
| TB -HV +HV | ——- | 335VDC | | SPINDLE DRIVE | ——- |

## Smart Amplifier (P/N 93-5550J (30A) 93-3551J (45A))

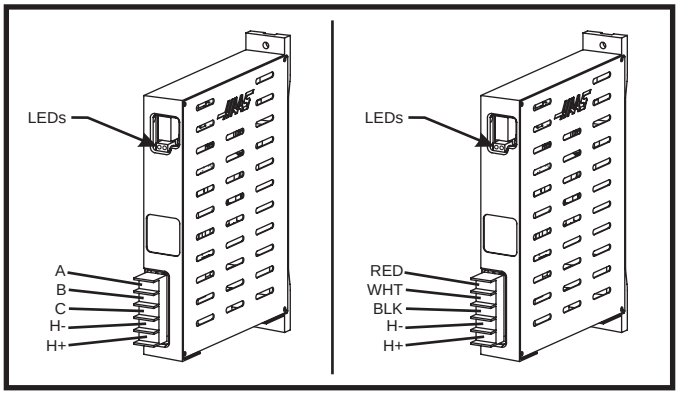


| PLUG # | CABLE # | SIGNAL NAME | ⇨ TO ⇨ | LOCATION | PLUG # |
|---|---|---|---|---|---|
| **X AXIS AMP** | | | | | |
| TB A, B, C | ——- | MOTOR DRIVE | | X SERVO MOTOR | ——- |
| SERVO PLUG | 610 | X DRIVE SIGNAL | | MOCON PCB | P2 |
| TB -HV +HV | ——- | 335VDC | | SPINDLE DRIVE | ——- |
| **Y AXIS AMP** | | | | | |
| TB A, B, C | ——- | MOTOR DRIVE | | Y SERVO MOTOR | ——- |
| SERVO PLUG | 620 | Y DRIVE SIGNAL | | MOCON PCB | P3 |
| TB -HV +HV | ——- | 335VDC | | SPINDLE DRIVE | ——- |
| **Z AXIS AMP** | | | | | |
| TB A, B, C | ——- | MOTOR DRIVE | | Z SERVO MOTOR | ——- |
| SERVO PLUG | 630 | Z DRIVE SIGNAL | | MOCON PCB | P4 |
| TB -HV +HV | ——- | 335VDC | | SPINDLE DRIVE | ——- |
| **A AXIS AMP** | | | | | |
| TB A, B, C | ——- | MOTOR DRIVE | | A SERVO MOTOR | ——- |
| SERVO PLUG | 640 | A DRIVE SIGNAL | | MOCON PCB | P5 |
| TB -HV +HV | ——- | 335VDC | | SPINDLE DRIVE | ——- |

## System Block Diagram - High/Low Voltage

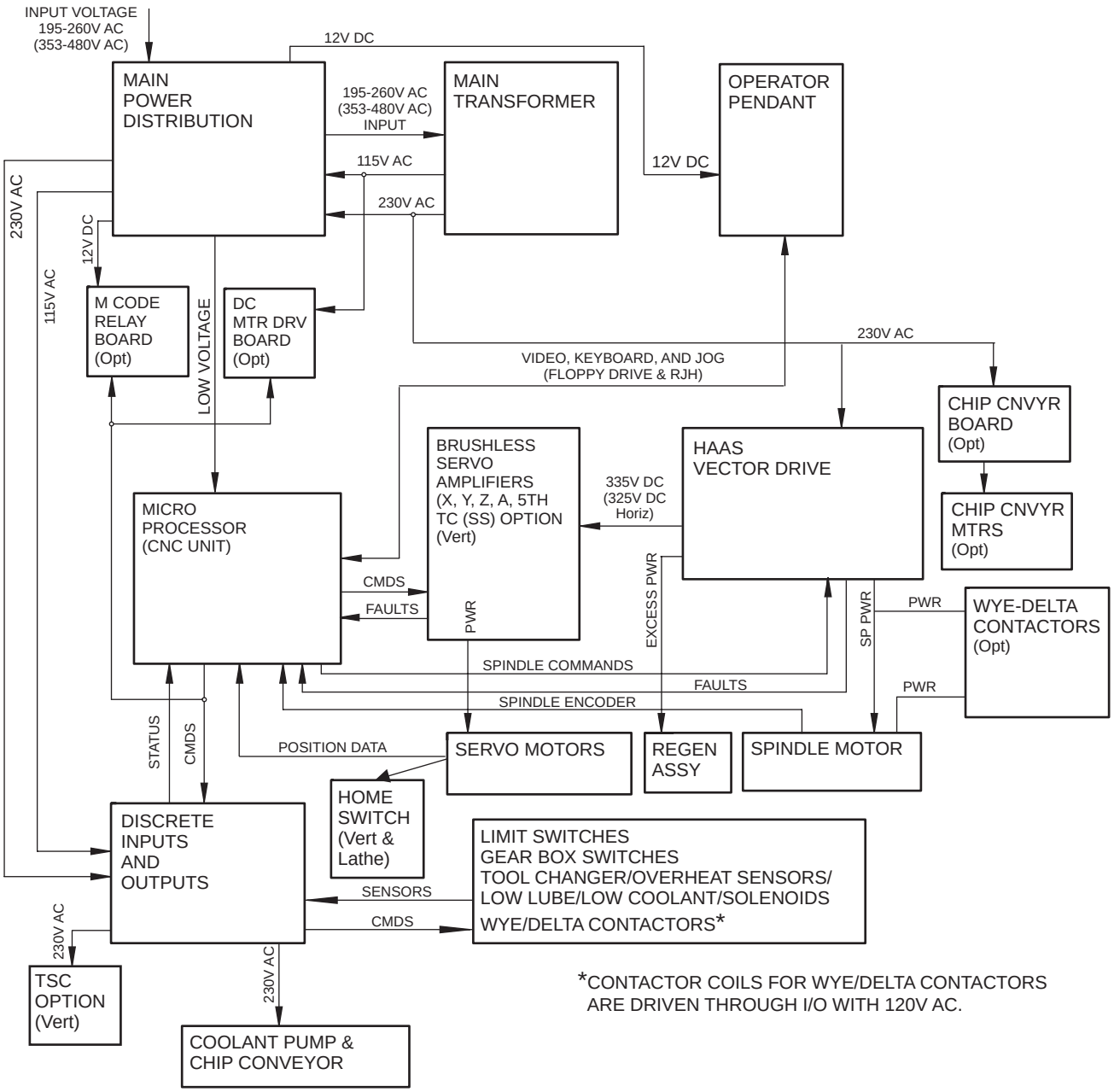

## Power PCB Version K/L

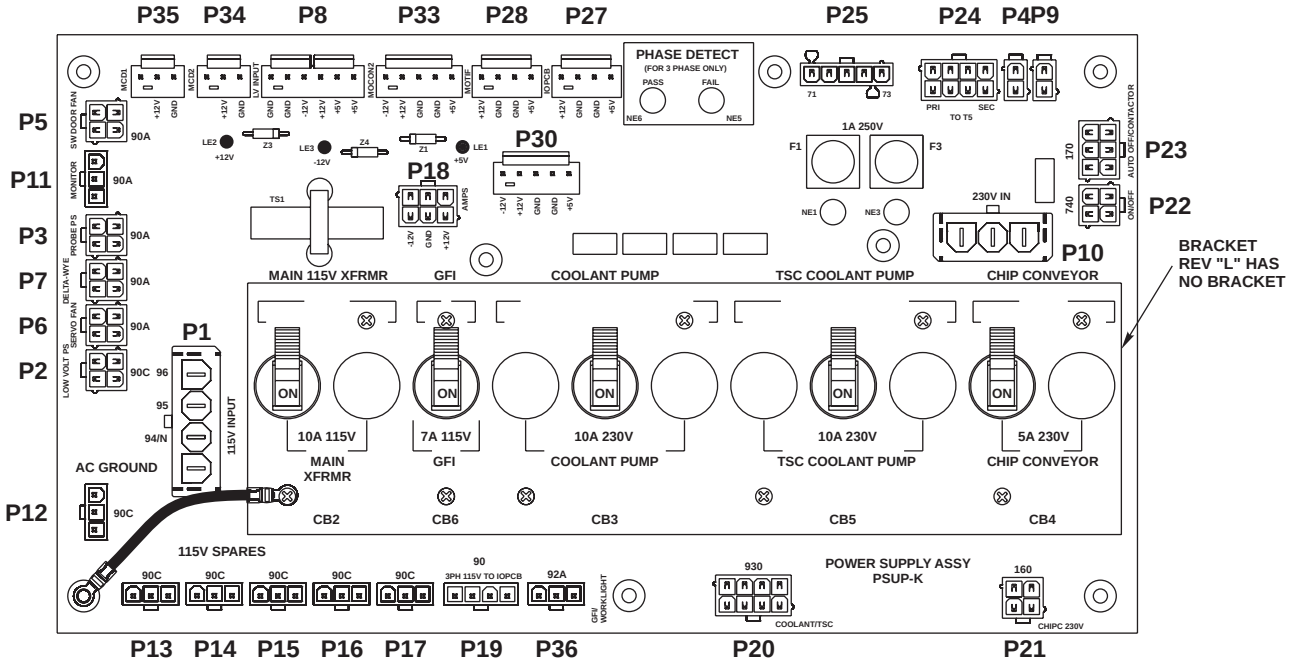


| PLUG # | CABLE # | SIGNAL NAME | ⇨ TO ⇨ | LOCATION | PLUG# |
|---|---|---|---|---|---|
| P1 | 94-96 | 3-PHASE | | Transformer | |
| P2 | 90C | 115VAC | | LVPS | |
| P3 | 90A | 115VAC | | Spare | |
| P4 | Jumper | | | Jumper | |
| P5 | 90B | 115VAC | | Switch Door Fan | |
| P6 | 90A | 115VAC | | Servo Fan | |
| P7 | 90A | 115VAC | | Delta-Wye | |
| P8 | Jumper | +12/-12/+5 VDC In | | From LVPS | |
| P9 | Jumper | | | Jumper | |
| P10 | 77/79 | 230VAC 3/PHASE | | Transformer | |
| P11 | 90A | 115VAC | | Front Pnl P.S. (spare) | |
| P12 | 90C | 115VAC | | spare | |
| P13 | 90C | 115VAC | | spare | |
| P14 | 90C | 115VAC | | spare | |
| P15 | 90C | 115VAC | | spare | |
| P16 | 90C | 115VAC | | spare | |
| P17 | 90C | 115VAC | | spare | |
| P18 | 860 | 115VAC | | Amplifiers | |
| P19 | 90 | 3PH 115VAC | | I/O PCB | P56 |
| P20 | 930 | 230V CLNT PUMP/TSC | | I/O PCB | P44 |
| P21 | 160 | Chip Conv. 230V 3PH | | I/O PCB | P39 |
| P23 | 170 | Auto Off/Contactor | | Contactor K1/ I/O PCB | P42 |
| P22 | 740 | On/Off | | Front Panel (SKBIF) | J20 |
| P24 | T5 | Main Cont Frmr | | To T5 | |
| P25 | 71, 72, 73 | 230VAC IN | | From Contactor K1 | |
| P27 | 860 | +12/+5 VDC | | I/O PCB | P60 |
| P28 | 860 | +12/+5 VDC | | Motif PCB | P15 |
| P30 | 860 | +12/-12/+5 VDC | | spare | |
| P33 | 860 | +12/-12/+5 VDC | | Mocon 2 PCB | P15 |
| P34 | 860A | +12 VDC | | SMTC PCB | P2 |
| P35 | 860 | +12 VDC | | MCD Relay PCB | P2 |
| P36 | 92A | | | Worklight | |

## Office Mill Power Supply

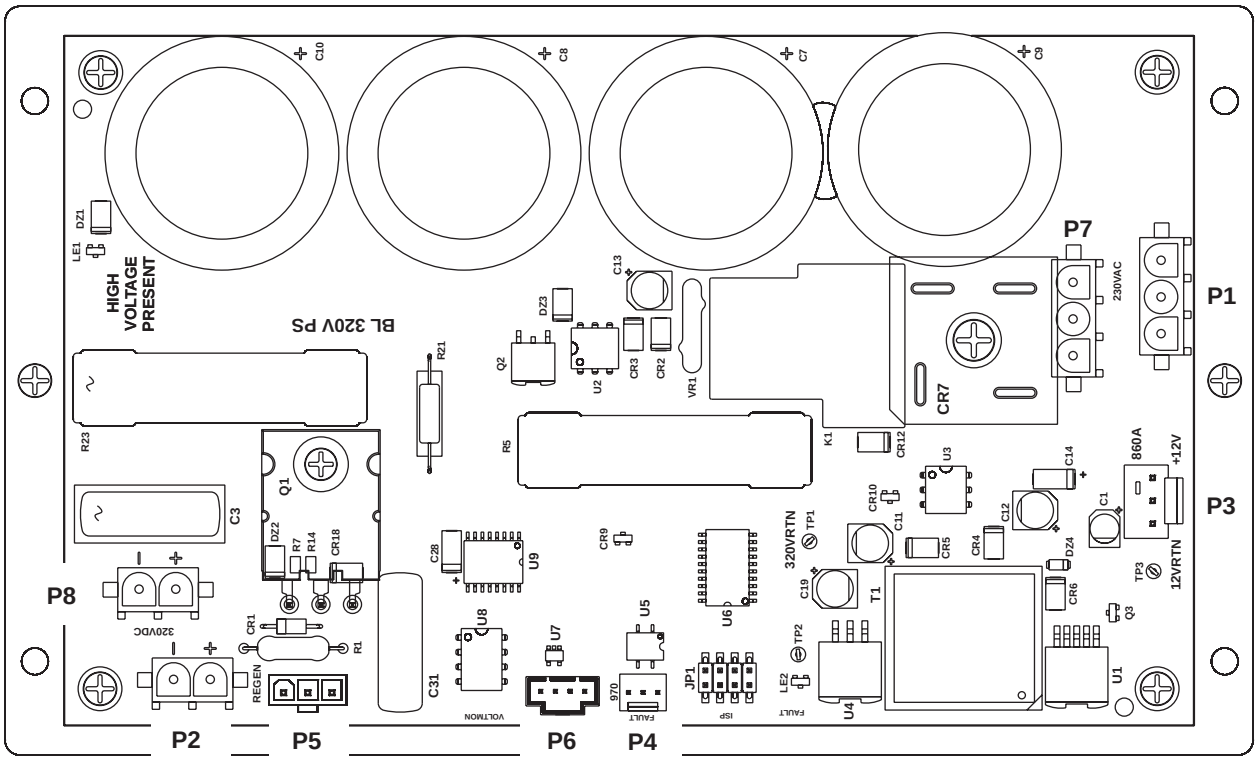


| PLUG # | CABLE # | LOCATION | PLUG# |
|---|---|---|---|
| P1 | 32-5827A | Office machine main transformer LV 1PH | Main transformer |
| P2 | | N/A | |
| P3 | 33-0982 | Cable 860A +5/+12 GND I/O PCB | I/O PCB P60 |
| P4 | 33-4150 | Cable 970 Vector Drive Over Volt | I/O PCB P11 |
| P5 | 32-7044 | 40 Ohm Regen Resister | |
| P6 | 33-9861 | Cable Volt Monitor | MOCON P17 |
| P7 | 33-0167A | Cable 230V in to BL320VP | PSUP (34-4075K) P10 |
| P8 | 33-0492 | Cable 320VDC to amp | 320VDC AMP TB |

## I/O PCB Version AC

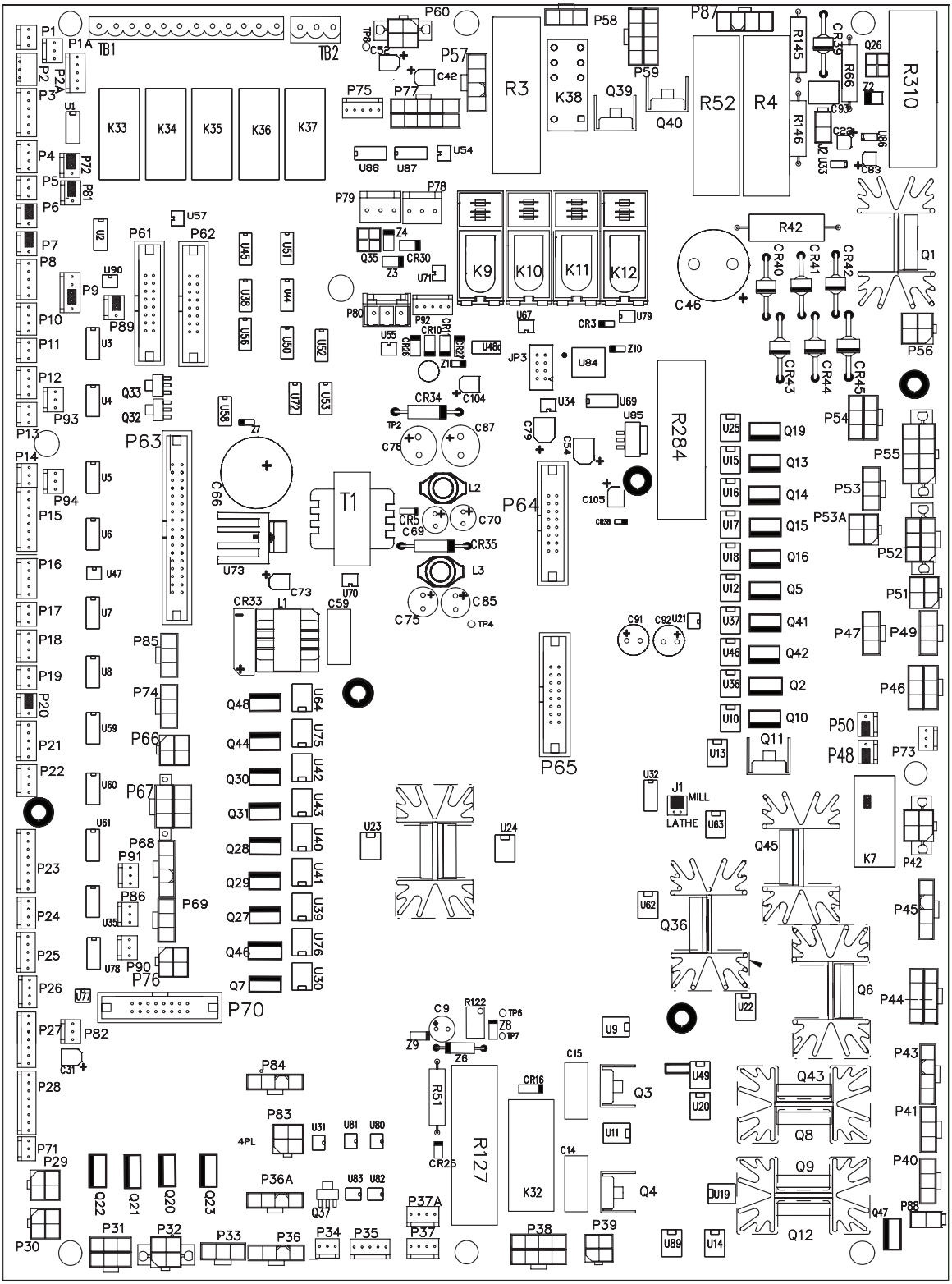

| PLUG # | CABLE # | ⇨ TO ⇨ | LOCATION | PLUG # |
|---|---|---|---|---|
| P1 | 140B | | Chip Conveyor Circuit Board (32-3072) | P3 |
| P2 | 820B | | TC in/SMTC Pkt down | |
| P2 (Lathe) | 820 | | TT Unlock/Lock | |
| P2A | 820B | | Shuttle In/Out | |
| P3 | 820 | | TC out/SMTC pocket up/Tool #1/TC mark | |
| P3 (Lathe) | 820 | | C-axis Engage/Disengage | |
| P4 | 900 | | Low TSC press | |
| P4 (Lathe) | 900 | | Low HPC | |
| P5 | 770 | | E-Stop Sw A | |
| P6 | 770A | | E-Stop Sw B | |
| P7 | 770B | | E-Stop Sw C | |
| P8 | 1050 | | Door Open A | |
| P9 | 1050A | | Door Open B | |
| P10 | 100 | | M-Fin | |
| P11 | 970 | | VD Over Volt | VD J1 |
| P12 | 950 | | Low Air/Low Oil | |
| P13 | 960 | | Low Lube | |
| P14 | 830 | | Regen Overheat | |
| P15 | 890 | | SP DB Open/Closed | |
| P15 (Lathe) | 890 | | Spare/Gearbox/Low Oil | |
| P16 | 780 | | Redundant E-stop/Vibration sensor | |
| P17 | 410 | | APC Door Open , GR Air Curtain | |
| P17 (Lathe) | 410 | | TS Foot Sw/Sub Spindle Chuck Foot Switch | |
| P18 | 790 | | APC Pin Clear - door open/closed | |
| P18 (Lathe) | 790 | | Probe Home/Probe Down | |
| P19 | 190 | | Remote Unclamp Switch | |
| P19 (Lathe) | 190 | | Chuck Unclamp Foot Switch | |
| P20 | 190A | | Remote Unclamp | |
| P20 (Lathe) | 190A | | Chuck Unclamp Foot Switch | |
| P21 | 240 | | MD Pal unclamp, APC Pallet #1 Home, Pal Up/Dwn | |
| P21 (Lathe) | 240 | | BF Load Bar | |
| P22 | 1070 | | Skip/Probe | M22 |
| P23 | 420 | | Spare 4, Pallet Clamped/Unclamped, Pallet clamped error | |
| P23 (Lathe) | 420 | | Spare | |
| P24 | 440 | | Spare 6 | |
| P24 (Lathe) | 440 | | APL Load Station Door Open/Spare | |
| P25 | 450 | | Counterbalance 1/2 | |
| P25 (Lathe) | 450 | | Steady Rest Foot Switch/Spare | |
| P26 | 460 | | Spare 8, Probe Home Retract | |
| P26 (Lathe) | 460 | | Apl Rotator Mark/Home | |
| P27 | 470 | | Spare 9, SMTC mtr stop / SMTC origin/ /smtc cl uncl | |
| P27 (Lathe) | 470 | | Spare | |
| P28 | 480 | | Spare 10,  APC door closed/Open / APC pal clamped | |
| P28 (Lathe) | 480 | | Spare 10, APL Door Open/Closed, 8-pos T/C mark home | |
| P29 | 1040A | | CE Door LocK | |
| P30 | 1040 | | CE Door LocK | |
| P31 | 230 | | 5th Axis Brake | |
| P31 (Lathe) | 230 | | T/S Fwd/SS Air Blast | |
| P32 | 250 | | HTC shut, APC Door open, VR Shut In/PP Pallet Lift | |

| PLUG # | CABLE # | ⇨ TO ⇨ | LOCATION | PLUG # |
|---|---|---|---|---|
| P32 (Lathe) | 250 | | T/S Rev/SS Y-Delta | |
| P33 | 260 | | TSC Purge | |
| P33 (Lathe) | 260 | | T/S Rapid/ SS Brake | |
| P34 | 270 | | APC Pal Ready Lt | |
| P34 (Lathe) | 270 | | Spare (12V Output) | |
| P35 | 200 | | Spigot CW/CCW | |
| P35 (Lathe) | 200 | | BF End of Bar / TL TC CW/CCW | |
| P36 (P36A) | 280 | | HIL/Worklight | |
| P37 | 140A | | Chip Conv Enable/Reverse | |
| P38 | 140 | | Chip Conveyor Enable/Reverse | |
| P39 | 160 | | 230V Coolant, Chip Conv Power PSUP P21 | |
| P39 (Lathe) | 160 | | 250V for Chip Conv. | |
| P40 | 300 | | Spindle Fan, Oil Pump/Luber | |
| P41 | 300A | | SP Fan/Oil Pump | |
| P42 | 170 | | Auto Off | PSUP P23 |
| P43 | 940 | | Coolant Output | |
| P44 | 930 | | 250V TSC/Cool Input Power | PSUP P20 |
| P44 (Lathe) | 930 | | 230V for Coolant | |
| P45 | 940A | | TSC Coolant | TSC Cool. Out. |
| P45 (Lathe) | 940A | | HPC Coolant | PSUP P20 |
| P46 | 390 | | 4th Axis Brake | |
| P46 (Lathe) | 390 | | Spin Brake (Live Tooling Hyd Brake) | |
| P47 | 350 | | Servo Brake | |
| P47 (Lathe) | 350 | | Hyd Pump Enable | |
| P48 | 120 | | Coolant Over Temp | |
| P48 (Lathe) | 120 | | Not Used (Jumper) | |
| P49 | 350A | | Servo Brake, Hyd Enable | |
| P49 (Lathe) | 350A | | Brake Release | |
| P50 | 130 | | TSC Over Temp | |
| P50 (Lathe) | 130 | | Not Used (Jumper) | |
| P51 | 430 | | Pallet up | |
| P51 (Lathe) | 430 | | APL Light/BF Extend Push | |
| P52 | 710 | | APC #1 pal ready #1,2, PC Pallet Up/Down | |
| P52 (Lathe) | 710 | | APL Gripper Grip 1, Grip 2 | |
| P53 (P53A) | 880C (880D) | | Wye-Delta Switch | |
| P54 | 880B | | Gearbox, High/Low Gear | |
| P55 | 880A | | Tool unclamp precharge (spindle head sol.), Delta Y Switch | |
| P55 (Lathe) | 880A | | Chuck Unclamp/TT Out/ML Fast Push | |
| P56 | 90 | | 115V 3ph power | PSUP P19 |
| P57 | Haas P/N 33-0815B | | TC Jumper or SMTC brake resistor | |
| P57 (Lathe) | | | External TC Motor Resistor (Jumper) | |
| P58 | 810A | | T.C. in/SMTC ATC fwd / APC chain drive FWD/REV | |
| P58 (Lathe) | 810A | | APL Rotator CW/CCW, BF Load Bar, 8-pos TC rotate | |
| P59 | 810 | | T.C. CW/ SMTC CRSL CW | |
| P59 (Lathe) | 810 | | Auto Door Motor Open/Close | |
| P60 | 860A | | +5/+12V Logic Pwr (LVPS) (I/O PCB) | PSUP P27 |
| P61 | 540 | | Outputs Cable 24-55 (I/0PCB) | MOCON P14 |
| P62 | 540A | | To 2nd M-code PCB | MCD Relay P1 |
| P63 | 550 | | Inputs Cable | MOCON P10 |

| PLUG # | CABLE # ⇨ TO ⇨ | LOCATION | PLUG # |
|---|---|---|---|
| P64 | 520 | Outputs Cable 8-15 | MOCON P12 |
| P65 | 510 | Outputs Cable 0-7 | MOCON P11 |
| P66 | 1100 (M27) | Air Blast | |
| P67 | 1110 (M28) | Beeper/Air Blast | |
| P67 (Lathe) | M28 | Sub Spin Chuck Sol | |
| P68 | 310 | 2010 Min Lube Spindle/APC Door Open/ PC Pallet Clamp | |
| P69 | 220 | Air Door, SMTC Pocket Up/Down, VR Shuttle Out | |
| P69 (Lathe) | 220 | C-axis Engage | |
| P70 | 530 | Outputs Cable 16-23 | MOCON P13 |
| P71 | 500 | Low Grease Pressure | |
| P72 | 770C | E Stop D/E | |
| P73 | Haas P/N 33-1966 | TSC Enable | |
| P74 | M26 | Spare | |
| P75 | 710A | NSK Spindle, APC Pal Clamp/Unclamp, GR Air Curtain | |
| P75 (Lathe) | 710A | APL LIght, BF Extend Push, APL Grip 1 | |
| P76 | 1160 | Oil Squirt (MOM) | |
| P77 | 1070 | Probe | |
| P78 | 350A | Servo Brake | |
| P79 | 350A | Servo Brake | |
| P80 | | N/A | |
| P81 | 770C | E-Stop | |
| P82 | 1130 | Oil Squirt (MOM) Low Oil | |
| P83 | | From GFI for Worklight | |
| P86 | | Spare | |
| P88 | | DES Vacuum Enable, PC Air Blast | |
| P88 (Lathe) | | Parts Catcher | |
| P90 | | Spare | |
| P91 | | Spare | |
| P92 | | Ground Fault | |
| P93 | | Redundant E-Stop | |
| P94 | | Redundant E-Stop | |
| TB1 | TB 1 (M21-24) | M-Code Outputs (Probe, M-Fin, User Spare) | |
| TB2 | TB 3 (M25) | M-Code Outputs (Probe) | |
| TB2 (Lathe) | TB 3 (M25) | User Spare | |

## Discrete Inputs

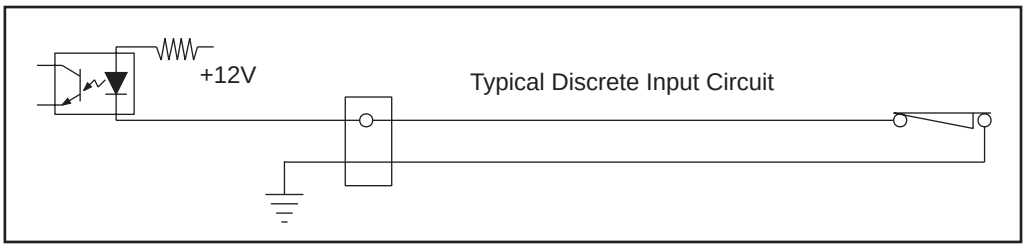


**(C) = Switch Normally Closed; (O) = Switch Normally Open**

| MACRO | CABLE | HORIZONTAL | VERTICAL | LATHE |
|---|---|---|---|---|
| 1000 | 820 P2/3 | TC In<br>SMTC Arm Mark<br>EC-400 (O) SMTC Pkt Dwn | (C) TC In<br>(O) SMTC Pkt Dwn | (C) TT Unlock<br>TL TC Home |
| 1001 | 820 P2/3 | TC Out<br>SMTC Shuttle Out<br>EC-400 (O) SMTC Pkt Up | (C) TC Out<br>(O) SMTC Pkt Up | (C) TT Lock<br>TL TC Mark |
| 1002 | 820 P3 | PC DB Down<br>EC-400 (O) SMTC Tool #1 | (C) Tool #1<br>(O) SMTC Tool #1 | *C-axis Disengage |
| 1003 | 900 P4 | Lo TSC Press<br>EC-400 Lo TSC Press | Lo TSC Press | Spare |
| 1004 | 820 P3 | PC Collet Down<br>EC-400 SMTC TC Mark | (C) TC Mark<br>(C) SMTC TC Mark | *C-axis Engage |
| 1005 | 890 P15 | (O) High Gear | (O) High Gear | High Gear |
| 1006 | 890 P15 | (C) Low Gear | (C) Low Gear | Low Gear |
| 1007 | 770 P5/6/7 | E-Stop | E-Stop | E-Stop |
| 1008 | 1050 P8/9 | (O) Door Open | (O) Door Open | Door Open |
| 1009 | 100 P10 | M-FIN | M-FIN<br>GR Plasma Confirm | M-FIN |
| 1010 | 970 P11 | Over Volt | Over Volt | Over Volt (not used) |
| 1011 | 950 P12 | Low Air | Low Air | Low Air |
| 1012 | 960 P13 | Low Way Lube | Low Way Lube | Low Way Lube |
| 1013 | 830 P14 | Overheat | Overheat | Overheat |
| 1014 | 890 P15 | (C) SP DB Open | (C) SP DB Open | Gearbox Low Oil |
| 1015 | 890 P15 | (C) SP DB Closed | (C) SP DB Closed | Spare |
| 1016 | 890 P15 | Spare<br>EC-400 3rd DB Pos Sw | 3rd DB Pos Sw | Spare |
| 1017 | 780 P16 | 2nd VD OV | 2nd VD OV | Spare |
| 1018 | 780 P16 | Contactor On | Contactor On | Spare |
| 1019 | 780 P16 | Cntr Balance | Cntr Balance | Spare |
| 1020 | 950 P12 | Gearbox Low Oil | Gearbox Low Oil | Low Hydraulic |
| 1021 | 410 P17 | Air Door Sw<br>EC-400 TC Door Open<br>Old EC-300 Tool Door Open | GR Air Curtain APC<br>CE Door Open | (O) *TS Foot Sw<br>(O) *Sub Spin Chck Ftsw |

| MACRO | CABLE | HORIZONTAL | VERTICAL | LATHE |
|---|---|---|---|---|
| 1022 | 790 P18 | PC Pallet CW<br>EC-400 PP Pallet Lift | (C) APC Pin Clr #1<br>(O) MD Op Door Open | (O) *Probe Home |
| 1023 | 790 P18 | PC Pallet CCW<br>EC-400 PP Pallet Lower | (C) APC Pin Clr #2<br>(O) MD Op Door Closed | |
| 1024 | 190 P19/20 | PC Op Station Locked/<br>Frnt Door<br>BF End of Bar | Rem Uncl | (O) Chuck Uncl Foot Sw |
| 1025 | 500 P71 | LO Phase/Low Grease | LO Phase/Low Grease | LO Phase/Low Grease |
| 1026 | 240 P21 | PC Pallet Up<br>BF Load Bar | (C) APC Pal #2 Home<br>(C) Old MD Pal Up<br>(C) New MD Pal Unclamp | (C) BF Load Bar |
| 1027 | 240 P21 | PC Pallet Down<br>BF Load Q<br>EC-1600 Clamp Press | (C) APC Pal #1 Home<br>(C) Old MD Pal Down | BF Load |
| 1028 | | Grnd Fault | Grnd Fault | Grnd Fault |
| 1029 | 1070 P22/77 | Skip | Skip | Skip |
| 1030 | 200 P35 | Possible P-Cool<br>EC-400 Spigot | Spigot | (C) BF End of Bar |
| 1031 | 140B P1 | Chip Conveyor | Chip Conveyor | Chip Conveyor |
| 1032 | 420 P23 | Mori Notch Pin In/<br>SMTC Arm In<br>EC-400 Pallet Clamped | (C) APC #2 Pin Clr #1 | Pocket Down |
| 1033 | 420 P23 | Mori Man Tool Rls In/<br>SMTC Arm Out<br>EC-400 Pallet Unclamped | (C) APC #2 Pin Clr #2 | Pocket Up |
| 1034 | 420 P23 | Mori Tool 1/SMTC Arm CCW<br>EC-400 Pallet Clamp Error | (C) APC #2 Pal #2 Home | Tool One |
| 1035 | 420 P23 | Mori TC Mark/SMTC Arm CW | (C) APC #2 Pal #1 Home | TC Mark |
| 1036 | 440 P24 | Mori Arm In/SMTC Cage<br>Door Open<br>EC-400 SMTC Cage<br>Door Open | (O) Auto Door Open | (O) Auto Door Open |
| 1037 | 440 P24 | Mori Arm Out | | APL Load Station Door Open |
| 1038 | 450 P25 | Mori Arm CCW | APC #2 CE Door Open | *Steady Rest Ftsw |
| 1039 | 450 P25 | Mori Arm CW | | Spare for Foot Sw |
| 1040 | 460 P26 | Mori Slide 1/2 Way | APC #2 Door Closed | (O) APL Rotator Mark |
| 1041 | 460 P26 | Mori Slide Left | APC #2 Door Open | (O) APL Rotator Home |
| 1042 | 470 P27 | Mori Swing Spin/SMTC<br>Shuttle Mark<br>EC-400 SMTC Motor Stop | SMTC Motor Stop | Motor Stop |
| 1043 | 470 P27 | Mori Swing Mag/SMTC<br>Slide at Chain<br>EC-400 SMTC Origin | SMTC Origin | Origin |

| MACRO | CABLE | HORIZONTAL | VERTICAL | LATHE |
|---|---|---|---|---|
| 1044 | 470 P27 | Mori Cage Door Open/ SMTC Slide at Standby EC-400 SMTC Cl/Uncl | SMTC Cl/Uncl | Cl/Uncl |
| 1045 | 470 P27 | Mori Slide Right/SMTC Slide at Spindle EC-400 Tool Transer | | |
| 1046 | 480 P28 | EC-400 8-pos TC Unlock | APC Door Closed | APL Door Closed |
| 1047 | 480 P28 | EC-400 8-pos TC Lock | APC Door Open | APL Door Open |
| 1048 | 480 P28 | EC-400 8-pos TC Mark | APC Pal Clamped | SS DB Open |
| 1049 | 480 P28 | EC-400 8-pos TC Home | APC Pal In Position | SS DB Closed |
| 1050 | 1130 P82 | EC-400 Oil Squirt Low Oil | Oil Squirt Low Oil | Oil Squirt Low Oil |
| 1051 | N/A | Tool Changer Fault | | |
| 1052 | N/A | In-Rush Detect | | |
| 1053 | N/A P86 | Spare A | | |
| 1054 | N/A P90 | Spare B | | |
| 1055 | N/A P91 | Spare C | | |

## Discrete Outputs

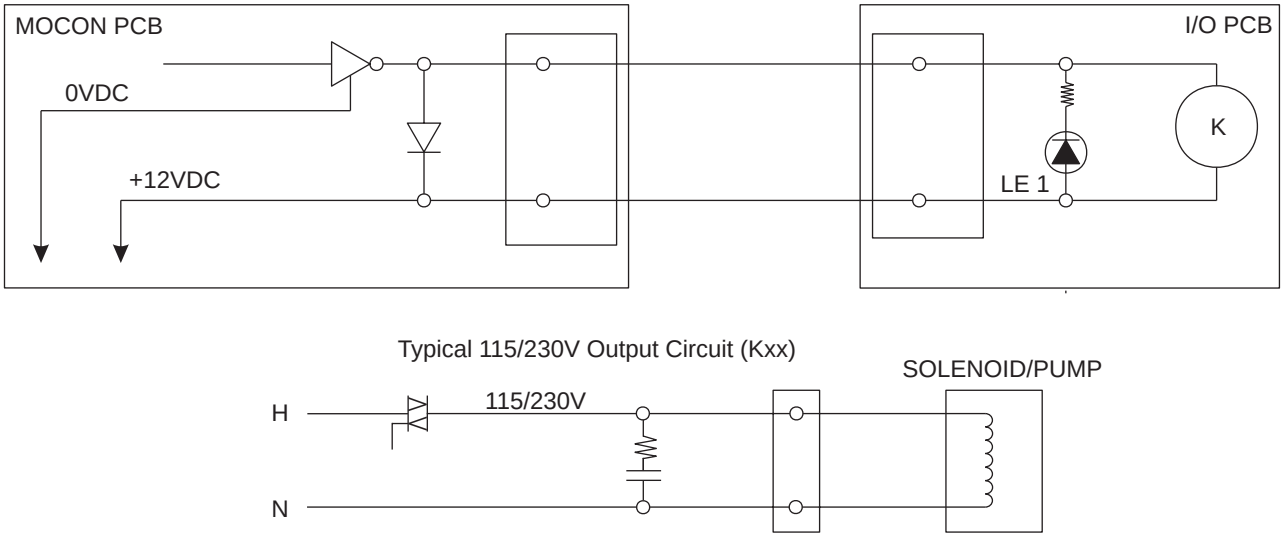


Note that voltages other than 115/230V are provided by specialty output circuits. These are identified with an asterisk.

| MACRO | CABLE | HORIZONTAL | VERTICAL | LATHE (SL) | VOLTAGE |
|---|---|---|---|---|---|
| 1100 | 350 P47/49 | Servo Pwr/Brk (EC) Servo Brake (HS) | Servo Pwr/Brk | Hyd Pump En | 115V |
| 1101 | 430 P51/75 | TC Door Open (EC) PC Pallet Up (HS) | APC Pal Clamp Old MD Pal Up New MD Pal Unclamp GR Air Curtain NSK Spin Fwd | APL Light BF Extd Push | 115V |

| MACRO | CABLE | HORIZONTAL | VERTICAL | LATHE (SL) | VOLTAGE |
|---|---|---|---|---|---|
| 1102 | 710 P52/75 | PC Pallet Up (EC)<br>P-Cool (HS)<br>BF Collet Open (HS) | APC#1 Pallet Ready 1<br>NSK Spin Rev | APL Grip 1 | 115V |
| 1103 | 710 P52 | PC Pallet Down (EC)<br>BF Collet Close (HS) | APC#1 Pallet Ready 2<br>Robot Fix Uncl | APL Grip 2 | 115V |
| 1104 | 390 P46 | 4th Axis Platter Up (EC)<br>4th Axis Brake (HS) | 4th Axis Brake | Spin Brk | 115V |
| 1105 | 940 P43 | Coolant | Coolant | Coolant | 230V |
| 1106 | 170 P42 | Auto Off | Auto Off | Auto Off | 24VAC* |
| 1107 | 300 P40/41 | Sp Fan<br>Oil pump<br>Luber | Sp Fan<br>Oil pump<br>Luber | Sp Fan<br>Oil pump<br>Luber | 115V |
| 1108 | 810 P58/59 | SMTC ATC Fwd (EC)<br>Tool Xfer Fwd (EC)<br>PC  Main DB Fwd (HS)<br>BF Load Q (HS) | TC In<br>SMTC ATC Fwd<br>APC Chn Drv Fwd | APL Rotator CW<br>BF load Q<br>8-pos TC Rotate | 170VDC*<br>paired w/<br>K10 |
| 1109 | 810 P58/59 | SMTC ATC Rev (EC)<br>Tool Xfer Rev (EC)<br>PC Main DB Rev (HS)<br>BF Load Bar (HS) | TC Out<br>SMTC ATC Rev<br>APC Chn Drv Rev | APL Rotator CCW<br>BF Load Bar<br>8-pos TC Rotate | 170VDC*<br>paired w/<br>K9 |
| 1110 | 810 P59 | SMTC Crsl CW (EC)<br>TC In (HS) | TC CW<br>SMTC Crsl CW | Auto Door Mtr Open | 170VDC*<br>paired w/<br>K12 |
| 1111 | 810 P59 | SMTC Crsl CCW (EC)<br>TC Out (HS) | TC CCW<br>SMTC Crsl CCW | Auto Door Mtr Close | 170VDC*<br>paired w/<br>K11 |
| 1112 | 880A P54/55 | High Gear (EC)<br>4 High Gear (HS) | High Gear | High Gear | 115V |
| 1113 | 880A P54/55 | Low Gear (EC)<br>4 Low Gear (HS) | Low Gear | Low Gear | 115V |
| 1114 | 880A P55 | Tool Unclamp | Tool Unclamp | Chuck Unclamp | 115V |
| 1115 | 880A P53<br>P53A/P55 | Delta-Wye Switch | Delta-Wye Switch<br>Laser Hi Press Assist | Delta-Wye Switch | 115V |
| 1116 | 200 P35 | Spigot CW (EC)<br>P-Cool (HS) | Spigot CW | TL TC CW | +12VDC* |
| 1117 | 200 P35 | Spigot CCW (EC)<br>P-Cool (HS) | Spigot CCW | TL TC CCW | +12VDC* |
| 1118 | 260 P34 | Pallet Ready Light | APC Pal Ready | | +12VDC* |
| 1119 | 270 P33 | TSC Purge | TSC Purge | T/S rapid<br>OM live tool #2 | 115V |
| 1120 | 880A P55 | Precharge | Precharge<br>Laser Low Press Assist | TT Out<br>TL TC up | 115V |
| 1121 | 250 P32 | PP Pallet Lift (EC)<br>HTC Shuttle (HS)<br>Mori Manual Tool Rls (HS) | VR Shut In<br>APC Door Open<br>Old MD Niagra Clnt On | T/S Rev<br>OM live tool #3 | 115V |

| MACRO | CABLE | HORIZONTAL | VERTICAL | LATHE (SL) | VOLTAGE |
|---|---|---|---|---|---|
| 1122 | 230 P31 | 5th Axis Brake | 5th Axis Brake | T/S Fwd<br>OM live tool #1 | 115V |
| 1123 | 1040 P29/30 | Door Interlock | CE Door Lock | CE Door Lock | 115V |
| 1124 | 310 P68 | PC Pallet Clamp (EC)<br>PC Pallet CW (HS) | APC#2 Door Open | Auto Door Clutch | 115V |
| 1125 | 310 P68 | PC Air Blast<br>Proto Flood Coolant<br>PC Pallet CCW (HS) | DES Vac Enable<br>GR Plasma Head Down | Parts Catcher | 115V |
| 1126 | 220 P69 | SMTC Pkt U/D Sol (EC)<br>Air Door (HS) | VR shut out<br>VB clamshell<br>SMTC Pkt U/D Sol<br>Laser Vac Enable | C-Axis Engage | 115V |
| 1127 | 940A P45 | TSC Clnt | TSC Clnt | P73 HP coolant | 230V |
| 1128 | 280 P36 | Spindle Lube | Spindle Lube | Spindle Lube | 115V |
| 1129 | 280 P36 | Worklight | Worklight | Worklight | 115V |
| 1130 | 140 P37/38 | ChipC En | ChipC En | ChipC En | 230V*<br>paired w/<br>K32 |
| 1131 | 140 P37/38 | ChipC Rev | ChipC Rev | ChipC Rev | 230V*<br>paired w/<br>K31 |
| 1132 | M21 TB1 | M-Fin<br>Shower Coolant (EC)<br>Mori Notch Pin Out (HS) | M-Fin<br>GR Plasma Start<br>HIT Index | M-Fin | Relay<br>Contact* |
| 1133 | M22 TB1/P77 | Probe | Probe<br>Laser Aim Beam On | Probe | Relay<br>Contact* |
| 1134 | M23 TB1/P77 | Probe (EC)<br>Mori Mag CW (HS) | Laser Shut Open<br>Spin Probe Enable` | Spin Probe Enable | Relay<br>Contact* |
| 1135 | M24 TB1 | Flood Coolant (EC)<br>Mori Mag CCW (HS) | HIT Go Home | Probe Arm Up | Relay<br>Contact* |
| 1136 | M25 TB2/P76 | Oil Squirter (MOM) | Oil Squirter (MOM) | Probe Arm Down<br>Oil Squirter (MOM) | Relay<br>Contact* |
| 1137 | 810A P58/74 | PC Main DB En (HS) | APC Chn Drv Pwr En | 8-pos TC Rotate | 160VDC* |
| 1138 | M27 P66 | Air Jet Blast (EC)<br>PC Air Blast (HS) | Gantry Oil<br>Air Blast | Air Blast<br>ML BF push<br>Air Closer Enable<br>Chuck Clamp | 115V |
| 1139 | M28 P67 | PC Beeper | APC Beeper, Airblast<br>Old EC300 Tool Door<br>New MD Airblast | Sub Spin Chuck | 115V |
| 1148 | P74 | Spare | | | 115V |
| 1149 | P85 | Spare | | | 115V |

## Serial Keyboard Interface PCB with Handle Jog (34-4241F)

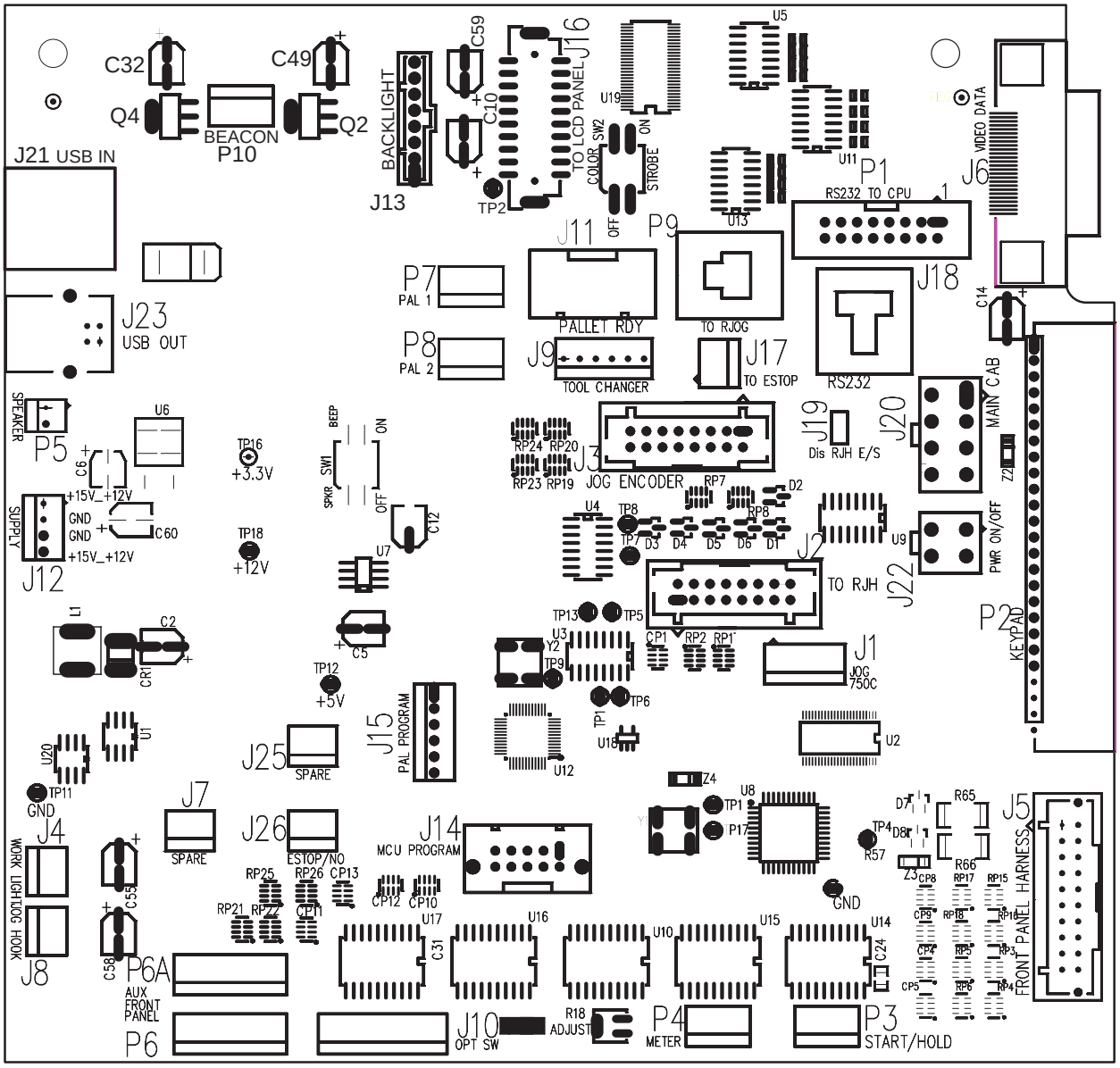


The Serial Keyboard Interface PCB (SKBIF) provides:

- connection between the operator keypad and the main processor
- differential receiver for video data
- power for the backlight of the LCD
- connection between the jog handle (remote jog handle) and the main processor
- various machine-dependent functions.

The SKBIF is backward-compatible for all previous mill, lathe and simulator hardware and software versions.

**NOTE:** The video data connectors are only used by machines with a 15” monitor. Machines with a 10” monitor have a separate differential card in the LCD panel connected directly to the main processor.

## Connector Descriptions

**P1** This connector supports an RS-232 ribbon cable that sends and receives data from the Main Processor.

**P2** This connector is used for the operator keypad interface. It receives keyboard data, which it sends to the SKBIF micro-controller (U8), where the data is processed and sent out over the RS-232 line to the Main Processor.

**P3** This connector is wired directly to the Cycle Start and Feed Hold buttons on the operator pendant front panel. The signals are sent to the SKBIF micro-controller (U8), where the data is processed and sent out over the RS-232 line to the Main Processor.

**P4** This connector is used on machines with an an analog Load Meter and is wired directly to the Load Meter on the operator pendant front panel.

**P5** This connector is wired directly to the Beeper on the operator pendant front panel. The Main Processor sends On/Off commands to the Beeper, while the 'beeps' associated with each key stroke are controlled by wiring between P5 and the SKBIF micro-controller (U8).

**P6** This connector is wired directly to the Cycle Start and Feed Hold buttons on a Remote Jog Handle or an auxiliary front panel. It handles Part Ready and Pallet Rotate signals as well as mill Pallet 6 scheduling. The signals are sent to the SKBIF micro-controller (U8), where the data is processed and sent outover the RS-232 line to the Main Processor.

**P6A** This connector is wired directly to an auxiliary front panel (such as a Tool Changer panel). It handles Cycle Start, Feed Hold, Part Ready and Pallet Rotate signals as well as mill Pallet 6 scheduling. The signals are sent to the SKBIF micro-controller (U8), where the data is processed and sent out over the RS-232 line to the Main Processor.

**P7** This connector is used by mills utilizing a pallet changer. Pallet 1 and 2 scheduling signals are sent to the SKBIF micro-controller (U8), where the data is processed and sent out over the RS-232 line to the Main Processor.

**P8** This connector is used by mills utilizing a pallet changer. Pallet 3 and 4 scheduling and vertical mill MD Load Table Rotation signals are sent to the SKBIF micro-controller (U8), where the data is processed and sent out over the RS-232 line to the Main Processor.

**P9** This connector is wired to the Enhanced Remote Jog Handle. RJH(E) signals are sent to the SKBIF micro-controller (U8), where the data is processed and sent out over the RS-232 line to the Main Processor.

**P10** This connector is wired to the beacon on the operator pendant. Thin pendant signals are sent in over the RS-232 line from the Main Processor to the SKBIF micro-controller (U8), which turns the beacon on and off.

**P11** This connector is not currently used.

**P12** This connector is not currently used.

**J1** This connector is wired to the Jog Handle on the operator pendant front panel. Jog Handle signals are sent to the SKBIF micro-controller (U8), where the data is processed and sent out over the RS-232 line to the Main Processor. If a cable is present on J3, jog handle signals are sent to the MOCON from J3.

**J2** This connector is wired to the Remote Jog Handle. RJH signals may be sent to the SKBIF microcontroller (U8), where the data is processed and sent out over the RS-232 line to the Main Processor. Alternatively, the RJH signals may be connected to J3, from where the data is sent directly to the MOCON.

**J3** This connector is wired to the Remote Jog Handle connector J2. RJH data is sent from J3 directly to the MOCON.

**J4** This connector is wired to the pendant's Worklight Switch on a vertical mill thin pendant. Worklight Switch signals are sent to the SKBIF micro-controller (U8), where the data is processed and sent out over the RS-232 line to the Main Processor.

**J5** Combines E-Stop, On/Off, Jog Handle, Cycle Start/Feed Hold, Beeper and Work Light signals.

**J6** This connector receives video data from the Main Processor. The video data exits the SKBIF from J16 and is sent directly to the LCD panel.

**J7** This connector is not currently used.

**J8** This connector is wired to the Enhanced Remote Jog Handle Switch on vertical mills. When the RJH(E) is placed in its receiver cradle, a HOOK signal is received over J8 and sent to the SKBIF microcontroller (U8), where the data is processed and sent out over the RS-232 line to the Main Processor.

**J9** This connector is used by horizontal mills utilizing a tool changer. Tool Changer Magazine CW/CCW, Manual, and Tool Release Pedal signals are sent from the Tool Changer box, received over J9 and sent to the SKBIF micro-controller (U8), where the data is processed and sent out over the RS-232 line to the Main Processor.

**J10** This connector is used by machines utilizing CE Push Button, Edit Lock Key Switch, 2nd Home Push Button, and Auto Door Push Button signals. Signals are sent from the Push Button or Switch, received over J9 and sent to the SKBIF micro-controller (U8), where the data is processed and sent out over the RS-232 line to the Main Processor.

**J11** This connector is used by machines utilizing a pallet changer. Part Ready, Pallet Rotate, and Autodoor signals are sent by all machines. Pallet scheduling signals are sent by mills. The signals are sent to the SKBIF micro-controller (U8), where the data is processed and sent out over the RS-232 line to the Main Processor.

**J12** This connector provides +12V DC power to the SKBIF from a power supply built into the LCD assemblies. This connector is not used for thin pendants, or if cabling is present on J20 and J22.

**J13** This connector provides power to a high voltage power supply in the LCD panel to supply backlighting to the LCD.

**J14** This connector is used to program the SKBIF micro-controller.

**J15** This connector is used to program PAL chip U12.

**J16** This connector receives video data from the Main Processor by way of J6. The video data exits the SKBIF from J16 and is sent directly to the LCD panel.

**J17** This connector is wired to the E-Stop button on the operator pendant front panel and to J20. The E-STOP signal enters at J17 and exits at J20, where it is sent to the I/O Board.

**J18** This connector supports an RS-232 RJ-11 style phone cable that sends and receives data from the Main Processor.

**J19** This connector is not used at this time. A jumper is in place across the two pins.

**J20** This connector receives +12V DC to power the SKBIF, Power On, Power Off and E-Stop signals.

**J22** This connector is wired to the Power On and Power Off buttons on the operator pendant front panel and to J20. The Power On and Off signals are received by J22 and sent to J20.

J25 Spare

J26 Spare

**SW1** This switch determines how the beeper is being driven. The switch is set to ‘BEEP’ for a front panel that contains a buzzer. The switch is set to ‘SPKR’ for a front panel that contains a speaker.

**SW2** The COLOR switch is set based upon what LCD assembly is used. SHARP LCD assemblies require the switch to be placed to the left (toward COLOR). LG LCD assemblies require the switch to be placed to the right (away from COLOR). The STROBE switch should always be placed to the left (toward STROBE).

## Video & Keyboard PCB w/Ethernet & USB Drive

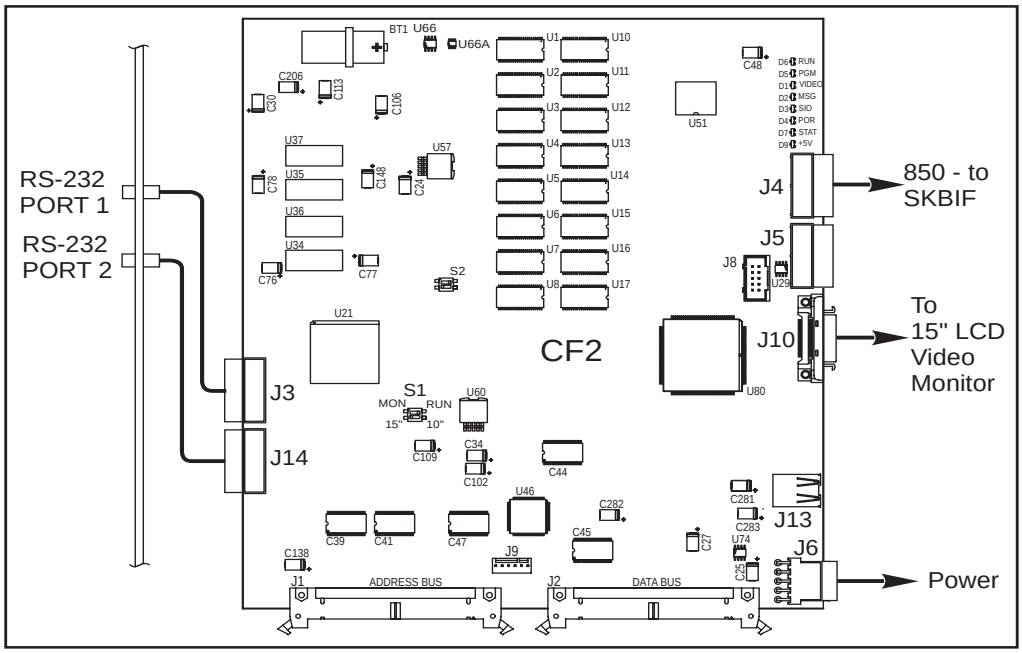


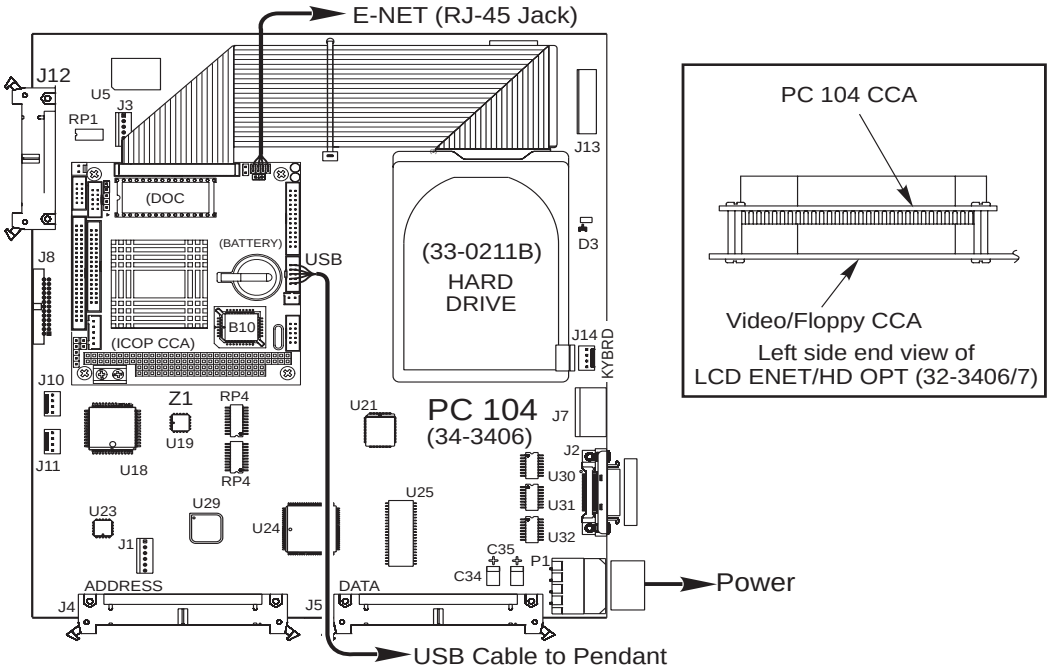


| PLUG # | CABLE # | SIGNAL NAME | ⇨TO ⇨ | LOCATION | PLUG # |
|---|---|---|---|---|---|
| P1 | 860 | LOW VOLTAGE | | POWER SUPPLY PCB | ____ |
| J2 | ____ | VIDEO SIGNAL | | N/A | ____ |
| J4 | ____ | ADDRESS BUSS | | MICRO PROC.PCB | ____ |
| J5 | ____ | DATA BUSS | | MOTIF PCB | ____ |
| J13 | 850 | SERIAL DATA | | N/A | J1 |
| J14 | ____ | SERIAL DATA | | KYBD | ____ |

## MOCON PCB

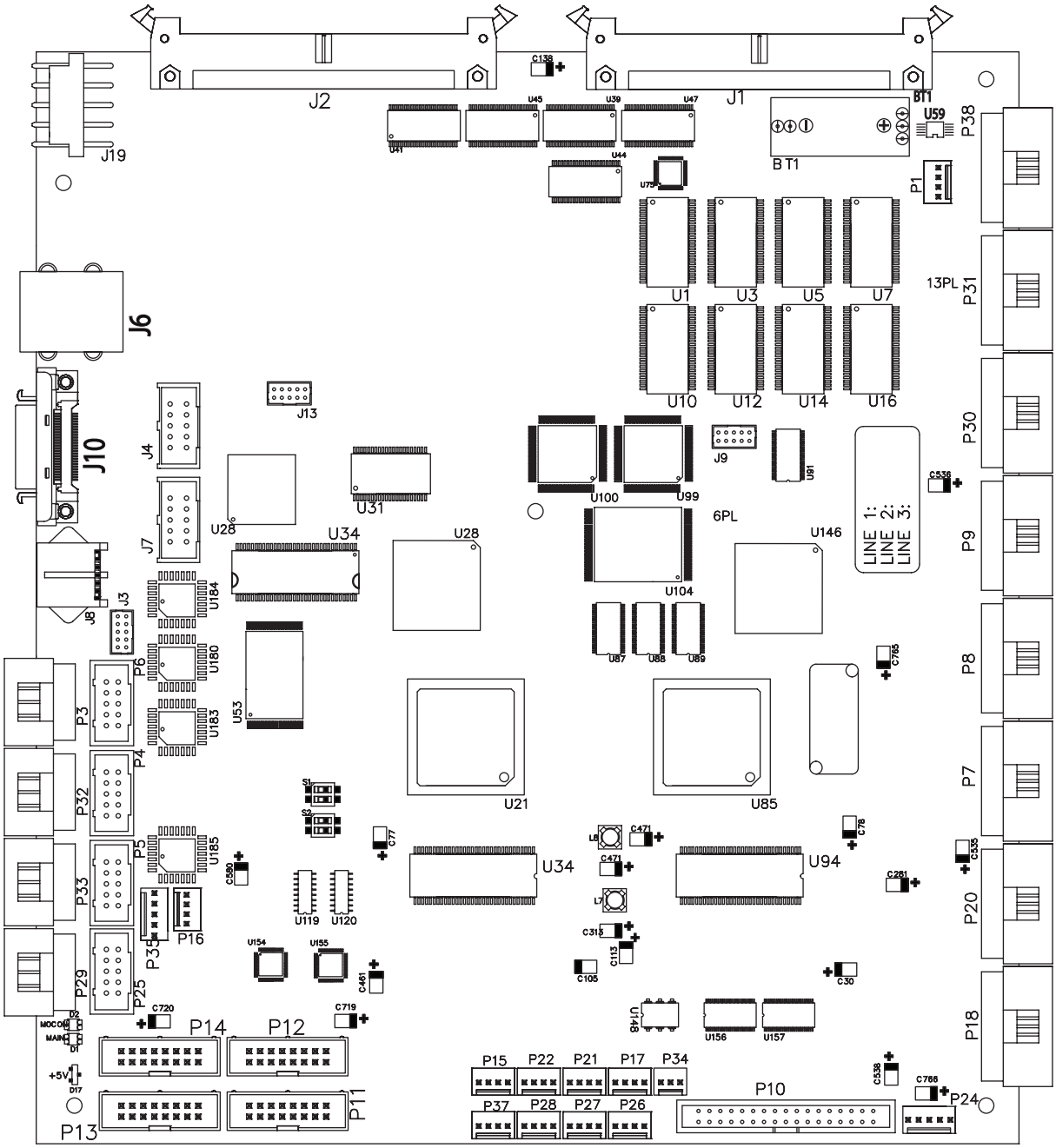

| PLUG # | CABLE # | SIGNAL NAME | ⇨ TO ⇨ | LOCATION | PLUG # |
|---|---|---|---|---|---|
| P1 | ——- | DATA BUSS | | VIDEO PCB | ——- |
| | | | | MICRO PROC. PCB | ——- |
| P2 | 610 | X DRIVE SIGNAL | | X SERVO DRIVE AMP. | P |
| P3 | 620 | Y DRIVE SIGNAL | | Y SERVO DRIVE AMP. | P |
| P4 | 630 | Z DRIVE SIGNAL | | Z SERVO DRIVE AMP. | P |
| P5 | 640 | A DRIVE SIGNAL | | A SERVO DRIVE AMP. | P |
| P32 | 640B | B DRIVE SIGNAL | | B SERVO DRIVE AMP. | P |
| P6 | 660 | X ENCODER INPUT | | X ENCODER | ——- |

| PLUG # | CABLE # | SIGNAL NAME | ⇨ TO ⇨ | LOCATION | PLUG # |
|---|---|---|---|---|---|
| P7 | 670 | Y ENCODER INPUT | | Y ENCODER | ——- |
| P8 | 680 | Z ENCODER INPUT | | Z ENCODER | ——- |
| P9 | 690 | A ENCODER INPUT | | A ENCODER | ——- |
| P30 | 690B | B ENCODER INPUT | | B ENCODER | ——- |
| P10 | 550 | MOTIF INPUTS/I/O OUTPUTS | | I/O PCB | P4 |
| P11 | 510 | I/O RELAYS 1-8 | I/O | I/O PCB | P1 |
| P12 | 520 | I/O RELAYS 9-16 | | I/O PCB | P2 |
| P13 | 530 | I/O RELAYS 17-24 | | I/O PCB | P51 |
| P14 | 540 | I/O RELAYS 25-32 | | I/O PCB | P3 |
| P15 | 860 | LOW VOLTAGE | | POWER SUPPLY PCB | ——- |
| P16 | 720 | SP. LOAD METER | | LOAD METER | ——- |
| P17 | 640C | VOLTAGE MONITOR | | VECTOR DRIVE | J3 |
| P18 | 750 | JOG ENCODER INPUT | | JOG HANDLE | ——- |
| P19 | | ADDRESS BUSS | | VIDEO PCB | ——- |
| | | | | MICRO PROC. PCB | ——- |
| P20 | 1000 | SP. ENCODER INPUT | | SPINDLE ENCODER | ——- |
| P21 | | X-AXIS TEMP SENSOR | | | |
| P22 | 730B | SP. DRIVE LOAD | | SPINDLE DRIVE | ——- |
| P24 | 990 | HOME SENSORS | | X, Y & Z LIMIT | ——- |
| P26 | | Y-AXIS TEMP SENSOR | | | |
| P27 | | Z-AXIS TEMP SENSOR | | | |
| P28 | | SPARE | | | |
| P31 | 690C | C ENCODER INPUT | | SPINDLE MOTOR (lathe- 2nd spindle encoder) | |
| P33 | 640C | VCTR DR CUR. CMD. | | VECTOR DRIVE | J3 |
| P34 | | SPARE | | | |
| P35 | | PWM OUTPUT (LASER) | | | |

## RS-232 Port #1 PCB

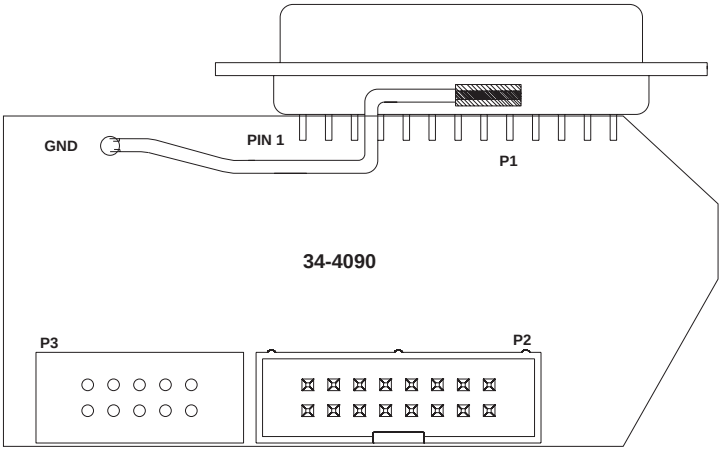


| PLUG # | CABLE # | ⇨ TO ⇨ | LOCATION | PLUG # |
|---|---|---|---|---|
| P1 | 850 | | CABINET CONNECTION | |
| P2 | 850A | | VIDEO & KEYBOARD | J13 |
| P3 | 850A | | PC104 OPTION | J9 |

## WYE-Delta Switch Assemblies

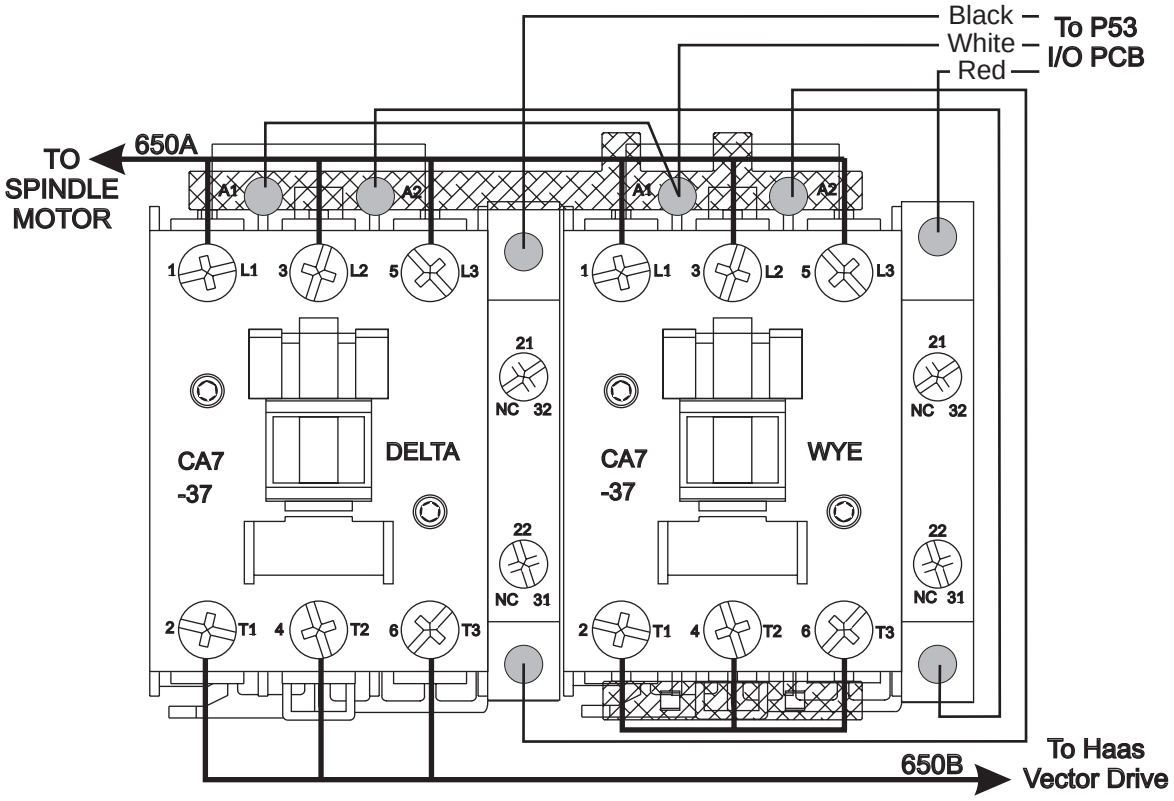


## M Code Relay Board

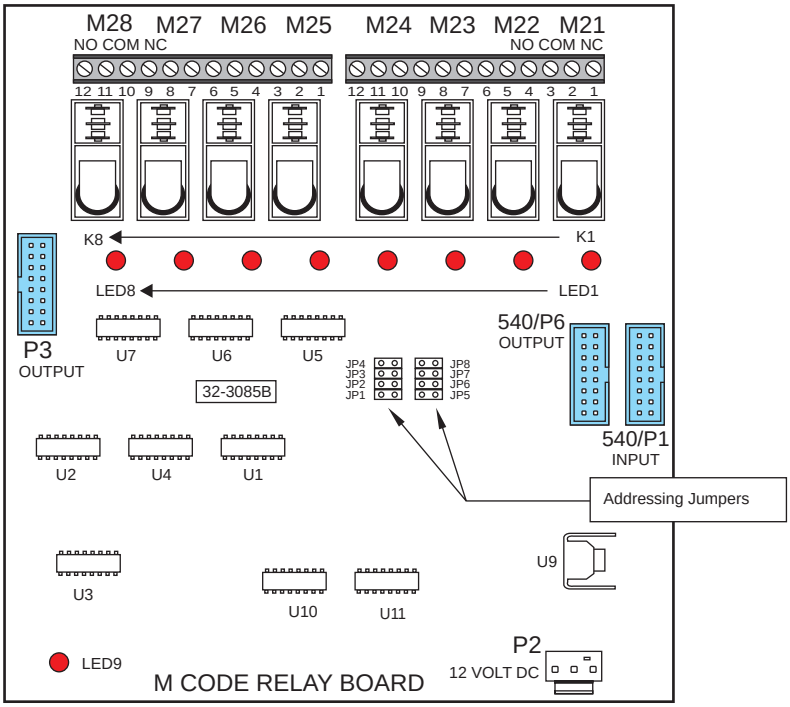

| PLUG # | CABLE # | SIGNAL NAME | ⇨ TO ⇨ | LOCATION | PLUG # |
|---|---|---|---|---|---|
| P1 | 540 | MOCON INPUT | | I/O PCB | P62 |
| P2 | 860A | 12V DC TO M-CODE PCBA | | PSUP | P31 |
| P3 | 540A | I/O PCB OUTPUT | | | |
| P4 | M21 | M-FUNCTION | | | |
| | M22 | PROBE OPTION | | | |
| | M24 | spare | | | |
| P5 | M25 | spare | | | |
| | M26 | spare | | | |
| | M27 | spare | | | |
| P6 | 540B | M CODE OUTPUT | | 2nd MCD | P1 |

## Hydraulic PCB

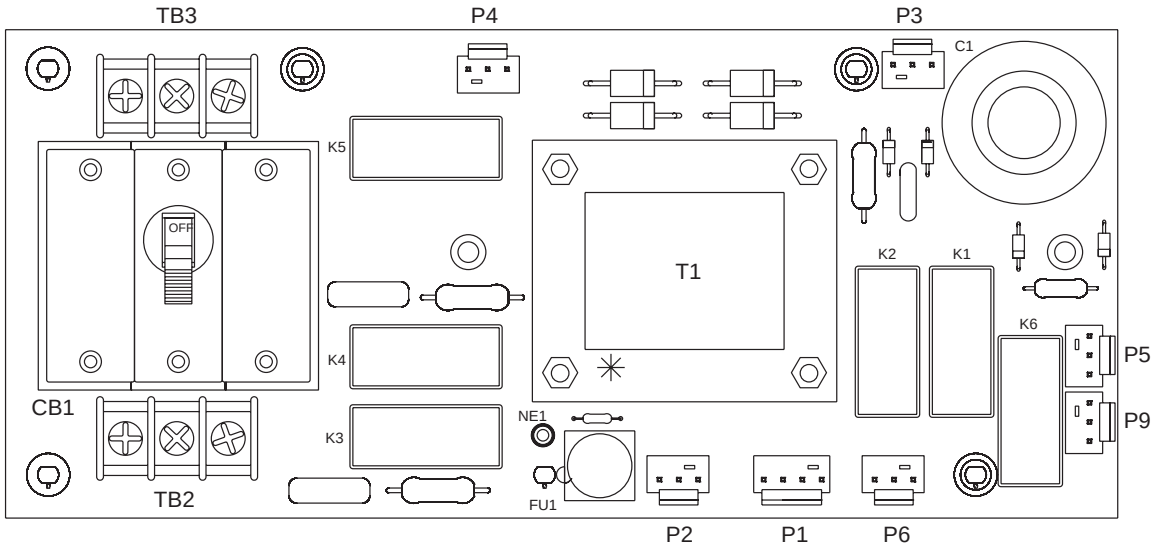


| PLUG # | CABLE # | ⇨ TO ⇨ | LOCATION | PLUG # |
|---|---|---|---|---|
| P1 | 880B | | I/O PCB | P12 |
| P2 | 90 | | POWER PCB | P8 |
| P3 | 410 | | GEARBOX | |
| P4 | 350 | | I/O PCB (Hyd pump en) | P54 |
| P5 | 350A | | AXIS BRAKE | Servo Motor |
| P6 | 350 | | 115V SERVO BRAKE | |
| P9 | 350A | | AXIS BRAKE | Servo Motor |
| TB2 | 340 | | HYDRAULIC MTR | |
| TB3 | 70 | | MAIN TRANSFORMER (VECTOR DRIVE UNIT) | |

## TSC Motor Drive/High Pressure Coolant PCB

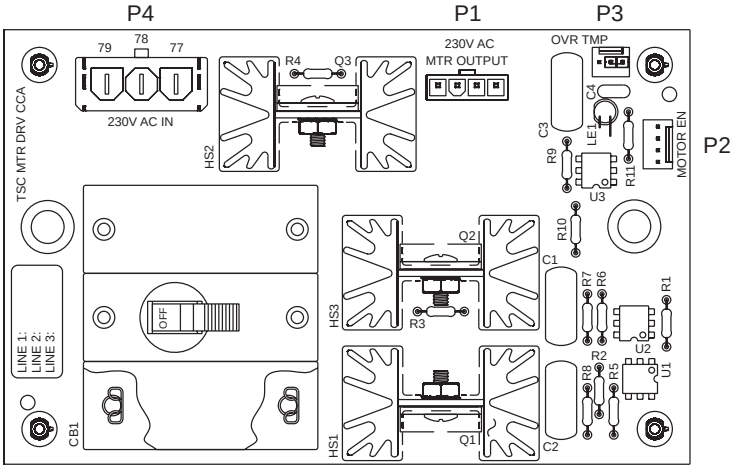


| PLUG # | CABLE # | LOCATION | PLUG # |
|---|---|---|---|
| P1 | 33-0941E | 3ph coolant pump socket | Pump Socket |
| P2 | 33-1944 | Coolant Enable | I/O PCB P73 |
| P3 | 33-0941E | OVR TMD | Pump Socket |
| P4 | 33-0987 | 230V IN | Out transformer TB2 |

## Haas Vector Drive Unit

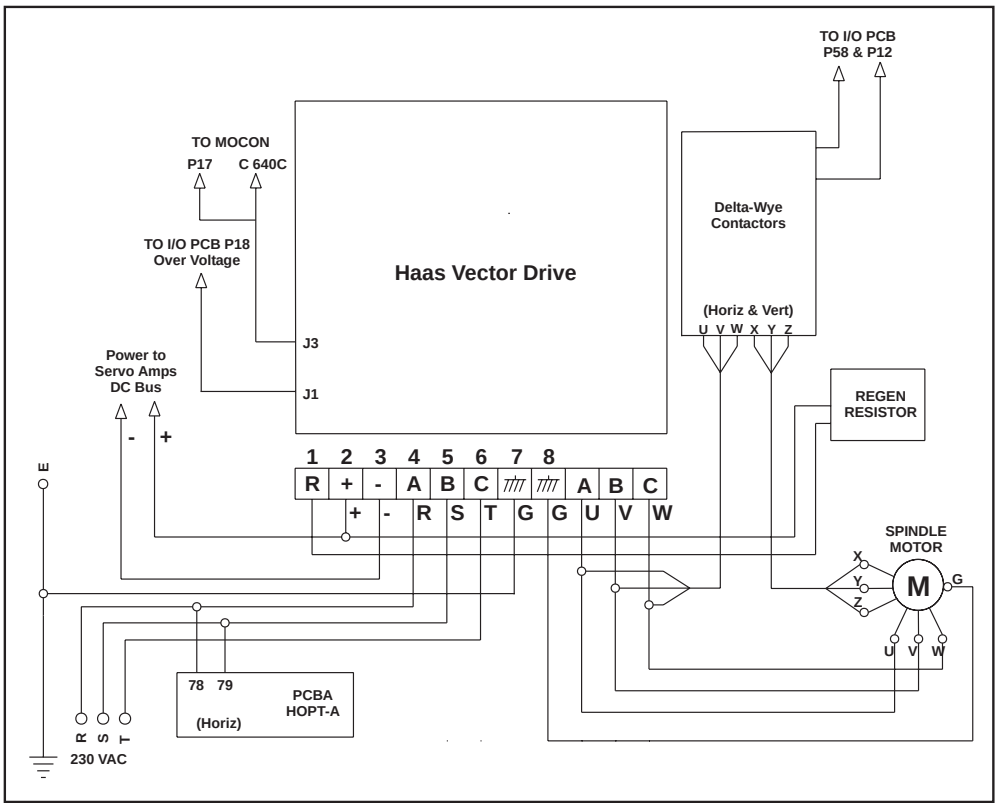

## Quad APC ( 32-3078A) PCB

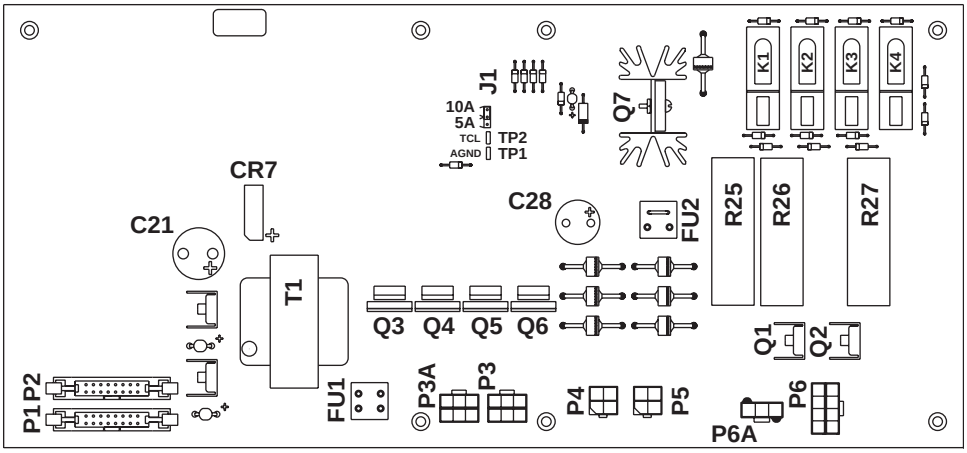


| PLUG # | CABLE # | LOCATION | PLUG # |
|---|---|---|---|
| P1 | 33-1516 | I/O PCB | P62 |
| P3 | 33-6038A | Air Door | |
| P4 | 33-0191 | From Power Card | |
| 6A | 33-6038A | Pallet Chain Motor | |

## Renishaw Tool Presetter (Lathe)

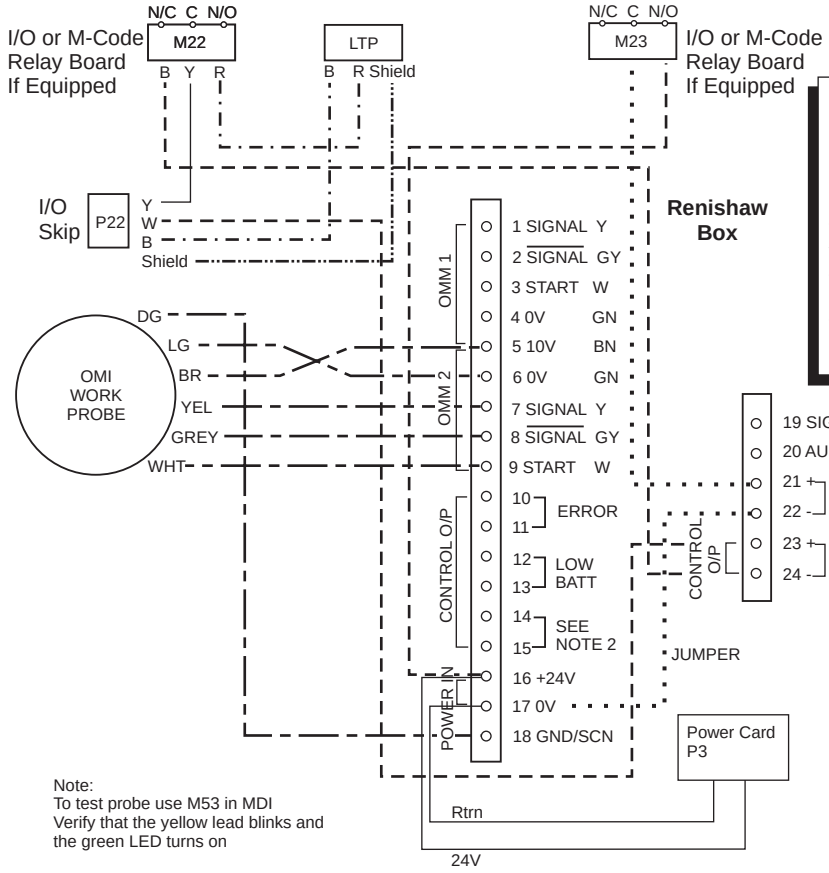


Note:
To test probe use M53 in MDI
Verify that the yellow lead blinks and
the green LED turns on

# Dual Probe
# LTP and Work Probe - Lathe

M52 LTP ON
M62 LTP OFF
M53 PROBE ON
M63 PROBEOFF

Note:
To test probe use M53 in MDI
Verify that the yellow lead blinks and
the green LED turns on

This toggles the skip bit shown on the
Diagnostics page, when the probe is deflected

Notes:
1. Set SW2 as shown

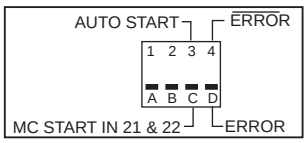


2. Set SW3 as shown

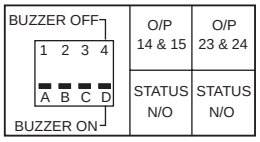


3. Other switch configurations
as defined in user handbook

## Operator Pendant

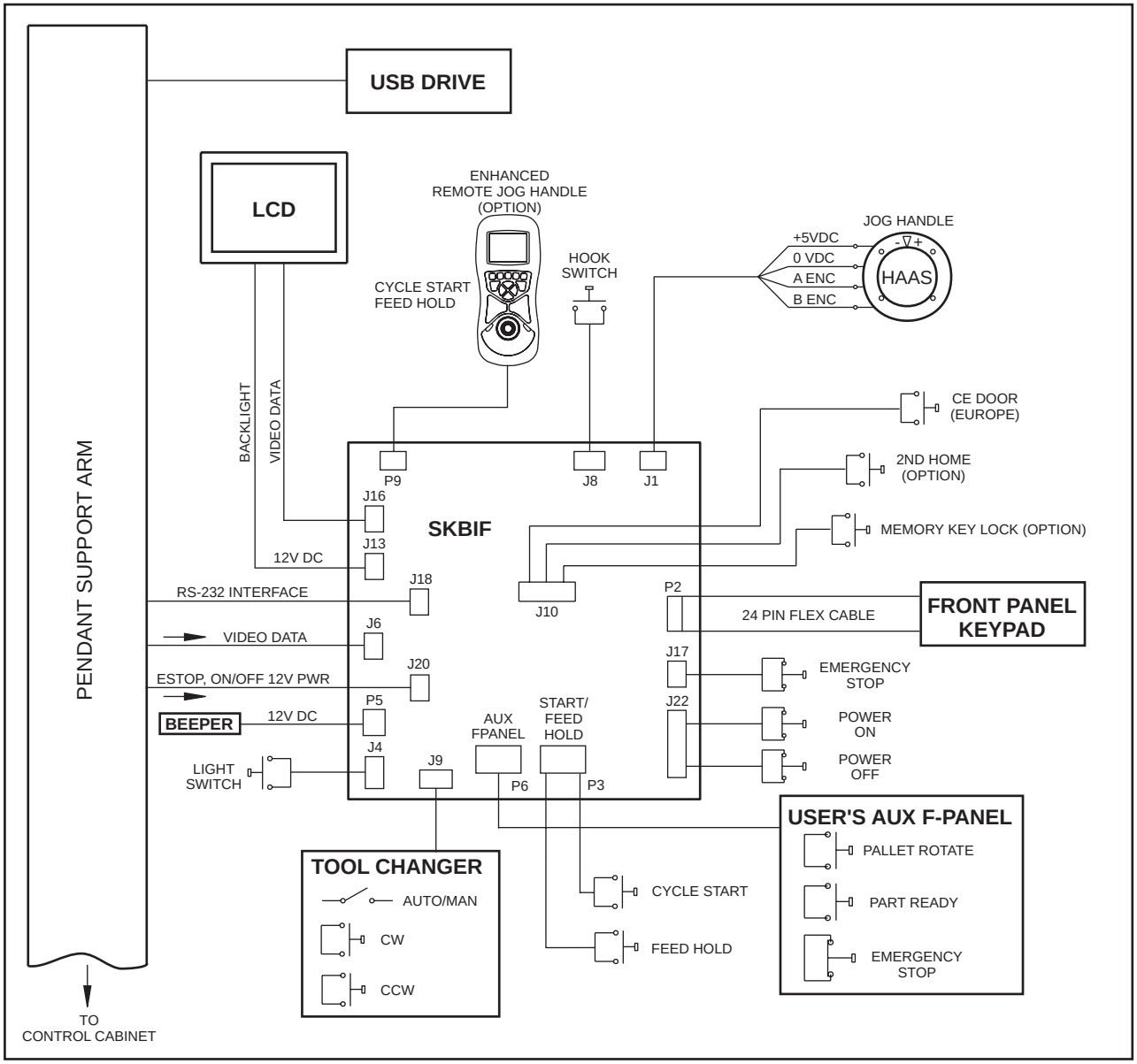

## Circuit Breakers

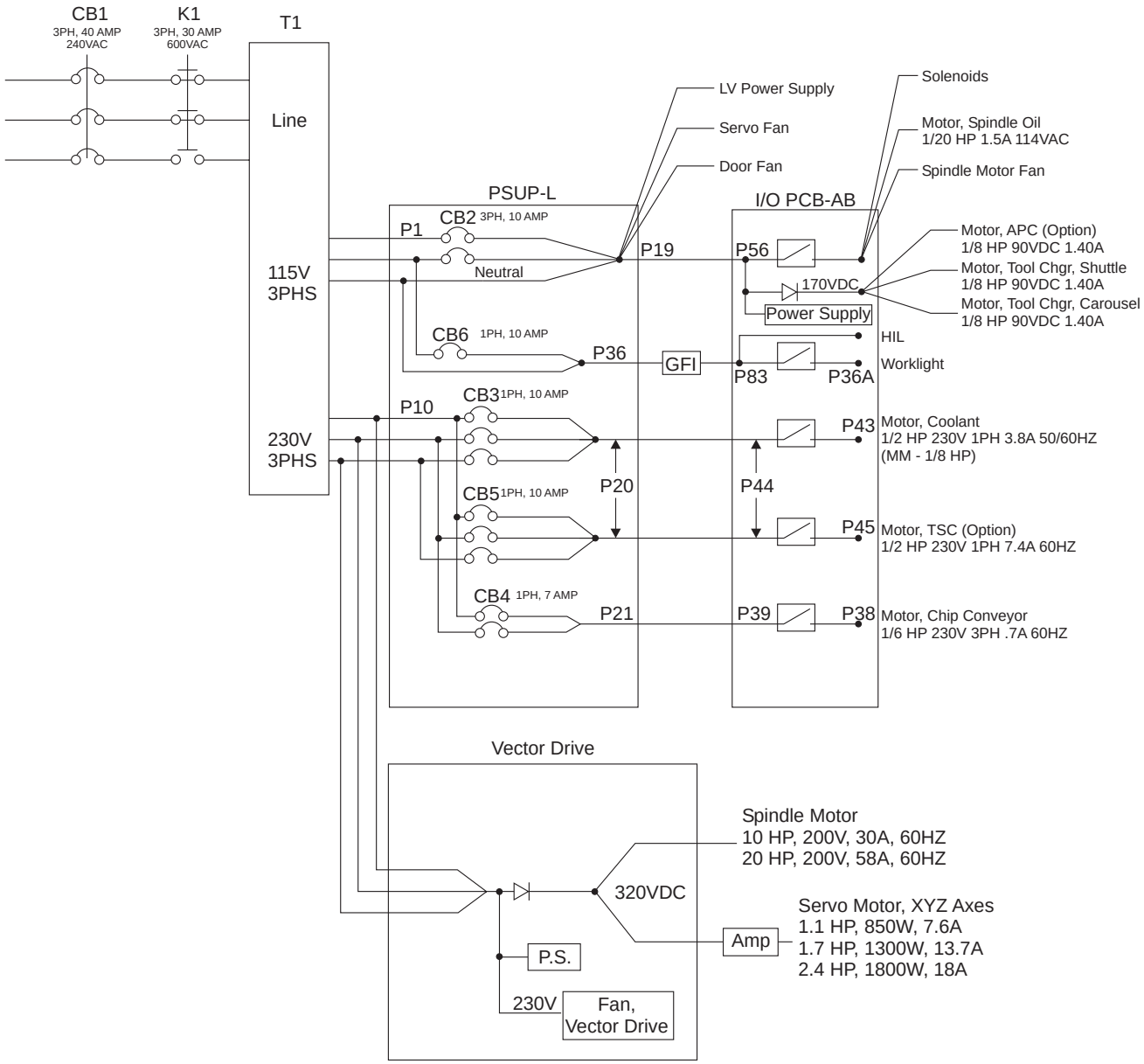


Minimill: CB2, 3, 6 = 1PH, 3A

## Horizontal Machine Control Cabinet Wiring Diagram

**CONTROL CABINET**

**FRONT PANEL**

| CABLE | NAME |
|---|---|
| 90A | 115VAC to LCD LVPS |
| 90B | 115VAC to Work Light Switch |
| 740 | Power On/Off |
| 760 | Video Data |
| 770 | Emergency Stop |
| 850 | SKBIF |
| 1050 | Door Switch Wiring |

**SUPER SPEED TOOL CHANGER**

| CABLE | NAME |
|---|---|
| 490B | Super Speed Tool Changer Motor Power |
| 690B | Super Speed Tool Changer Encoder |

**X AXIS**

| CABLE | NAME |
|---|---|
| 490X | X-Axis Motor Power |
| 660 | X Encoder, X Home Limit Switch |

**Z AXIS**

| CABLE | NAME |
|---|---|
| 490Z | Z-Axis Motor Power |
| 680 | Z Encoder, Z Home Limit Switch |
| 350A | 24VDC Servo Brake Release |

**A2/ 5TH AXIS**

| CABLE | NAME |
|---|---|
| 490B | B-Axis Motor Power |
| 690B | B Encoder, B Home Limit Switch |
| 230 | 5'th Axis Brake |

**LUBE PANEL**

| CABLE | NAME |
|---|---|
| 300 | 115VAC to Oiler |
| 960 | Low Lube |

**CHIP CONVEYOR**

| CABLE | NAME |
|---|---|
| 140 | 230VAC 3PH Power to Chip Conveyor Motor |

**SPARE**

| CABLE | NAME |
|---|---|
| 940 | 230VAC to Coolant Pump |

**FRONT PANEL/ PALLET CHANGER SIGNAL**

**TOOL CHANGER REMOTE BOX/ FRONT PANEL**

| CABLE | NAME |
|---|---|
| 420 | APC #2 CLR #1 & #2/APC #2 PAL #2 & #1 Home |
| 450 | APC #2 CE Door Open |
| 770B | Emergency Stop Input |
| 810 | APC Motor |
| 880B | Transmission High/Low Gear Solenoids |

**SPINDLE HEAD**

| CABLE | NAME |
|---|---|
| 190 | Unclamp from Spindle Head to I/O PCB |
| 200 | Coolant Spigot Motor |
| 300A | 115VAC to Spindle Motor Fan/Oil Pump/Oiler |
| 880A | High/Low Gear Unclamp/Lock Solenoid Power |
| 890 | Spindle Status Switches |
| 950 | Low Air Pressure Sensor |

**PALLET CHANGER**

| CABLE | NAME |
|---|---|
| 490X | X-Axis Motor Power |
| 660 | X Encoder, Home Limit Switch |

**Y AXIS**

| CABLE | NAME |
|---|---|
| 490Y | Y-Axis Motor Power |
| 670 | Y Encoder, Y-Home Limit Switch |

**A1/ A-AXIS**

| CABLE | NAME |
|---|---|
| 490A | A-Axis Motor Power |
| 690 | A Encoder, A-Home Limit Switch |
| 390 | 4'th Axis Brake |

**TOOL CHANGER**

| CABLE | NAME |
|---|---|
| 810 | Tool Changer Turret Motor |
| 810A | Tool Changer Shuttle Motor |
| 820 | Tool Changer Status |

**TSC**

| CABLE | NAME |
|---|---|
| 940A | 230VAC 3PH to TSC Coolant Pump |
| 130 | TSC Over Temp |

**MFIN/ CLG**

| CABLE | NAME |
|---|---|
| 100 | M-FIN |
| 730B | SP Drive Load (Coolant Level Gauge Sensor) |

**COOLANT**

| CABLE | NAME |
|---|---|
| 240 | APC PAL Home/MD PAL Up-APC PAL 1 Home PAL Down |
| 410 | APC CE Door Open |
| 710 | APC #1 Pallet Ready 1/APC #1 Pallet Ready 2 |
| 770B | Emergency Stop Input |
| 790 | APC Pin CLR #1/APC Pin CLR #2 |
| 810A | Tool Changer Motors |
| M28 | |

| CABLE | NAME |
|---|---|
| 250 | APC Door Open |
| 310 | APC #2 Door Open |
| 430 | APC Pallet Clamp Left Door |
| 460 | APC #2 Door Closed/Door Open |
| 480 | APC Pallet Clamp Right Door |

## Vertical Machine Control Cabinet Wiring Diagram

**CONTROL CABINET**

**FRONT PANEL**

| CABLE | NAME |
|---|---|
| 90A | 115VAC to LCD LVPS |
| 90B | 115VAC to Work Light Switch |
| 280 | Red/Green Status Light |
| 720 | Analog Speed Command to Spindle |
| 740 | Power On/Off |
| 750 | Jog-Crank Data 'RJH' |
| 770 | Emergency Stop |
| 1050 | Door Switch Wiring |

**SPARE-1/ SUPER SPEED TOOL CHANGER**

| CABLE | NAME |
|---|---|
| 490B | Super Speed Tool Changer Motor Power |
| 690B | Super Speed Tool Changer Encoder |

**X AXIS**

| CABLE | NAME |
|---|---|
| 490X | X-Axis Motor Power |
| 660 | X Encoder, X Home Limit Switch |

**Z AXIS**

| CABLE | NAME |
|---|---|
| 490Z | Z-Axis Motor Power |
| 680 | Z Encoder, Z Home Limit Switch |
| 350A | 24VDC Servo Brake Release |

**5TH AXIS**

| CABLE | NAME |
|---|---|
| 490B | B-Axis Motor Power |
| 690B | B Encoder, B Home Limit Switch |
| 230 | 5'th Axis Brake |

**LIMIT SWITCHES**

| CABLE | NAME |
|---|---|
| 300 | 115VAC to Oiler |
| 960 | Low Lube |
| 990 | X/Y/Z Home Sensors |

**CHIP CONVEYOR**

| CABLE | NAME |
|---|---|
| 140 | 230VAC 3PH Power to Chip Conveyor Motor |

**COOLANT**

| CABLE | NAME |
|---|---|
| 940 | 230VAC to Coolant Pump |

**SPARE-4/ QAPC-L**

| CABLE | NAME |
|---|---|
| 420 | APC #2 CLR #1 & #2/APC #2 PAL #2 & #1 Home |
| 450 | APC #2 CE Door Open |
| 770B | Emergency Stop Input |
| 810 | APC Motor |
| 880B | Transmission High/Low Gear Solenoids |

**FAST TOOL CHANGER**

| CABLE | NAME |
|---|---|
| 490X | Motor Power |
| 660 | Motor Encoder, Home Limit Switch |

**Y AXIS**

| CABLE | NAME |
|---|---|
| 490Y | Y-Axis Motor Power |
| 670 | Y Encoder, Y-Home Limit Switch |

**A AXIS**

| CABLE | NAME |
|---|---|
| 490A | A-Axis Motor Power |
| 690 | A Encoder, A-Home Limit Switch |
| 390 | 4'th Axis Brake |

**TOOL CHANGER**

| CABLE | NAME |
|---|---|
| 810 | Tool Changer Turret Motor |
| 810A | Tool Changer Shuttle Motor |
| 820 | Tool Changer Status |

**TSC**

| CABLE | NAME |
|---|---|
| 940A | 230VAC 3PH to TSC Coolant Pump |
| 130 | TSC Over Temp |

**MFIN/ CLG**

| CABLE | NAME |
|---|---|
| 100 | M-FIN |
| 730B | SP Drive Load (Coolant Level Gauge Sensor) |

**SPARE-3/ QAPC-R**

| CABLE | NAME |
|---|---|
| 240 | APC PAL Home/MD PAL Up-APC PAL 1 Home PAL Down |
| 410 | APC CE Door Open |
| 710 | APC #1 Pallet Ready 1/APC #1 Pallet Ready 2 |
| 770B | Emergency Stop Input |
| 790 | APC Pin CLR #1/APC Pin CLR #2 |
| 810A | Tool Changer Motors |
| M28 | |

**SPARE-5/ APC DR/ RECVR**

| CABLE | NAME |
|---|---|
| 250 | APC Door Open |
| 310 | APC #2 Door Open |
| 430 | APC Pallet Clamp Left Door |
| 460 | APC #2 Door Closed/Door Open |
| 480 | APC Pallet Clamp Right Door |

## Lathe Control Cabinet Wiring Diagram

**CONTROL CABINET**

**FRONT PANEL**

| CABLE | NAME |
|---|---|
| 90A | 115VAC to LCD LVPS |
| 90B | 115VAC to Work Light Switch |
| 740 | Power On/Off |
| 760 | Video Data |
| 770 | Emergency Stop |
| 850 | SKBIF |
| 1050 | Door Switch Wiring |

**SPINDLE HEAD**

| CABLE | NAME |
|---|---|
| 190 | Unclamp from Spindle Head to I/O PCB |
| 300A | 115VAC to Spindle Motor Fan/Oil Pump/Oiler |
| 880A | High/Low Gear Unclamp/Lock Solenoid Power |
| 890 | Spindle Status Switches |
| 950 | Low Air Pressure Sensor |

**SUB SPINDLE**

| CABLE | NAME |
|---|---|
| 490 | Axis Motor Power |
| 660 | Encoder, Home Limit Switch |

**BARFEEDER AXIS**

| CABLE | NAME |
|---|---|
| 490B | Motor Power |
| 880 | Motor Encoder |

**TURRET**

| CABLE | NAME |
|---|---|
| 490 | A-Axis Motor Power |
| 670 | A Encoder, Y-Home Limit Switch |

**X AXIS**

| CABLE | NAME |
|---|---|
| 490X | X-Axis Motor Power |
| 660 | X Encoder, X Home Limit Switch |

**LIVE TOOLING**

| CABLE | NAME |
|---|---|
| 490 | Axis Motor Power |
| 690 | Encoder, A-Home Limit Switch |
| 390 | 4'th Axis Brake |

**Z AXIS**

| CABLE | NAME |
|---|---|
| 490Z | Z-Axis Motor Power |
| 680 | Z Encoder, Z Home Limit Switch |
| 350A | 24VDC Servo Brake Release |

**TAILSTOCK**

| CABLE | NAME |
|---|---|
| 810 | Tool Changer Turret Motor |
| 810A | Tool Changer Shuttle Motor |
| 820 | Tool Changer Status |

**C AXIS**

| CABLE | NAME |
|---|---|
| 490C | C-Axis Motor Power |
| 690C | C Encoder, B Home Limit Switch |
| 230 | 5'th Axis Brake |

**TSC**

| CABLE | NAME |
|---|---|
| 940A | 230VAC 3PH to TSC Coolant Pump |
| 130 | TSC Over Temp |

**LIMIT SWITCHES**

| CABLE | NAME |
|---|---|
| 300 | 115VAC to Oiler |
| 960 | Low Lube |

**MFIN/ CLG**

| CABLE | NAME |
|---|---|
| 100 | M-FIN |
| 730B | SP Drive Load (Coolant Level Gauge Sensor) |

**CHIP CONVEYOR**

| CABLE | NAME |
|---|---|
| 140 | 230VAC 3PH Power to Chip Conveyor Motor |

**HPU**

| CABLE | NAME |
|---|---|
| 770B | Emergency Stop Input |

**COOLANT**

| CABLE | NAME |
|---|---|
| 940 | 230VAC to Coolant Pump |

## Main Transformer (Low Voltage)

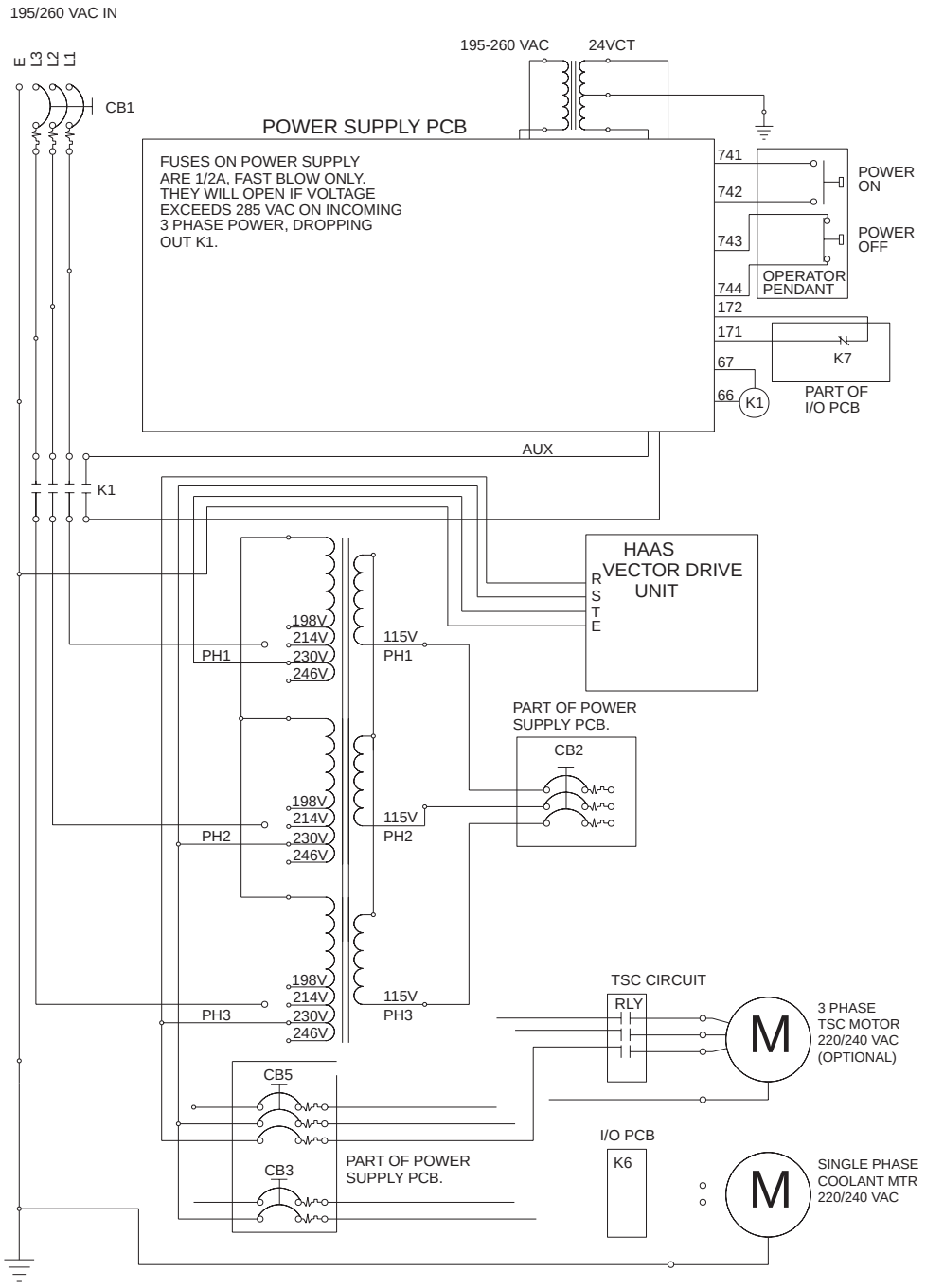

## Main Transformer (High Voltage)

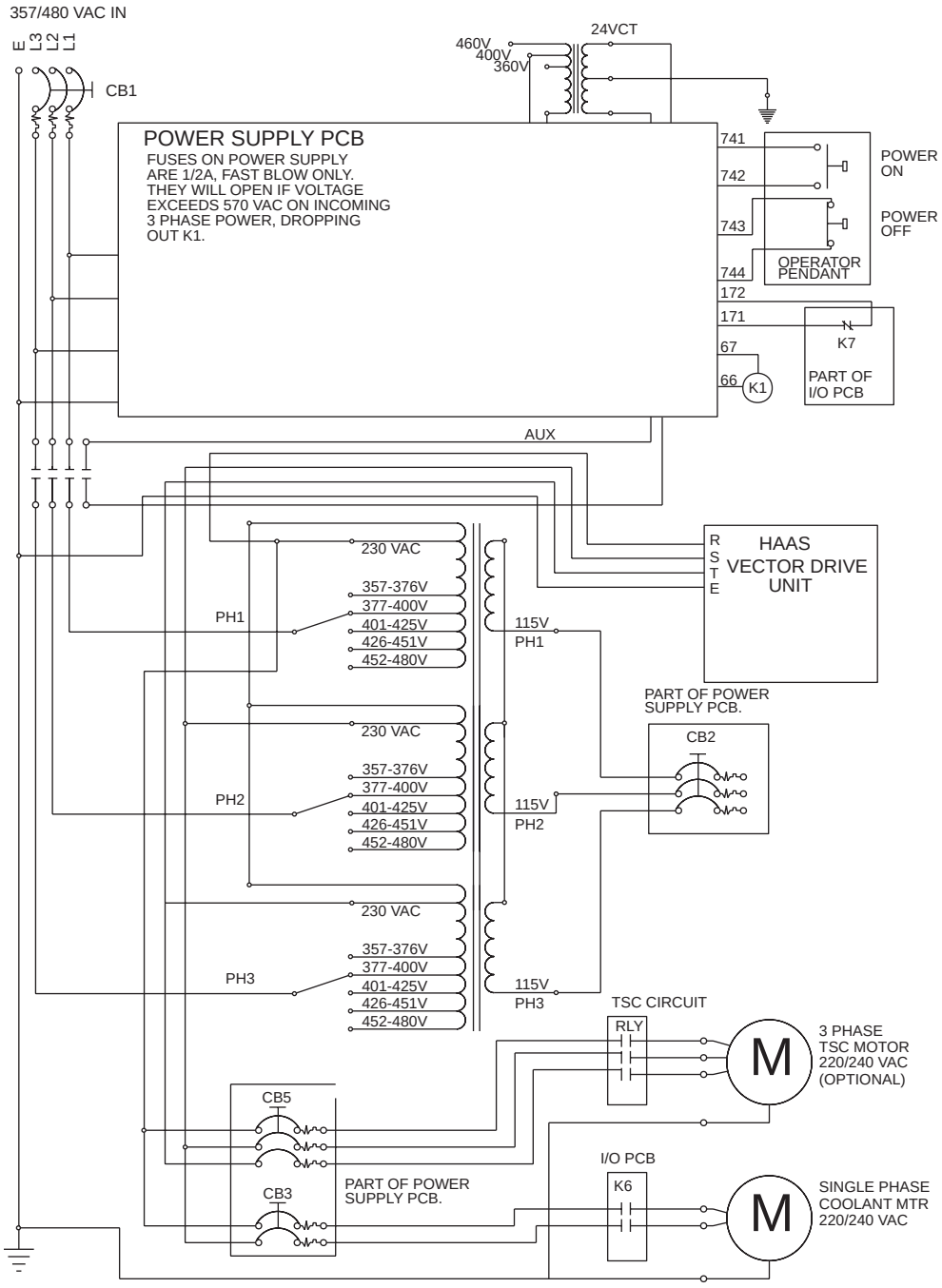

## Power Distribution

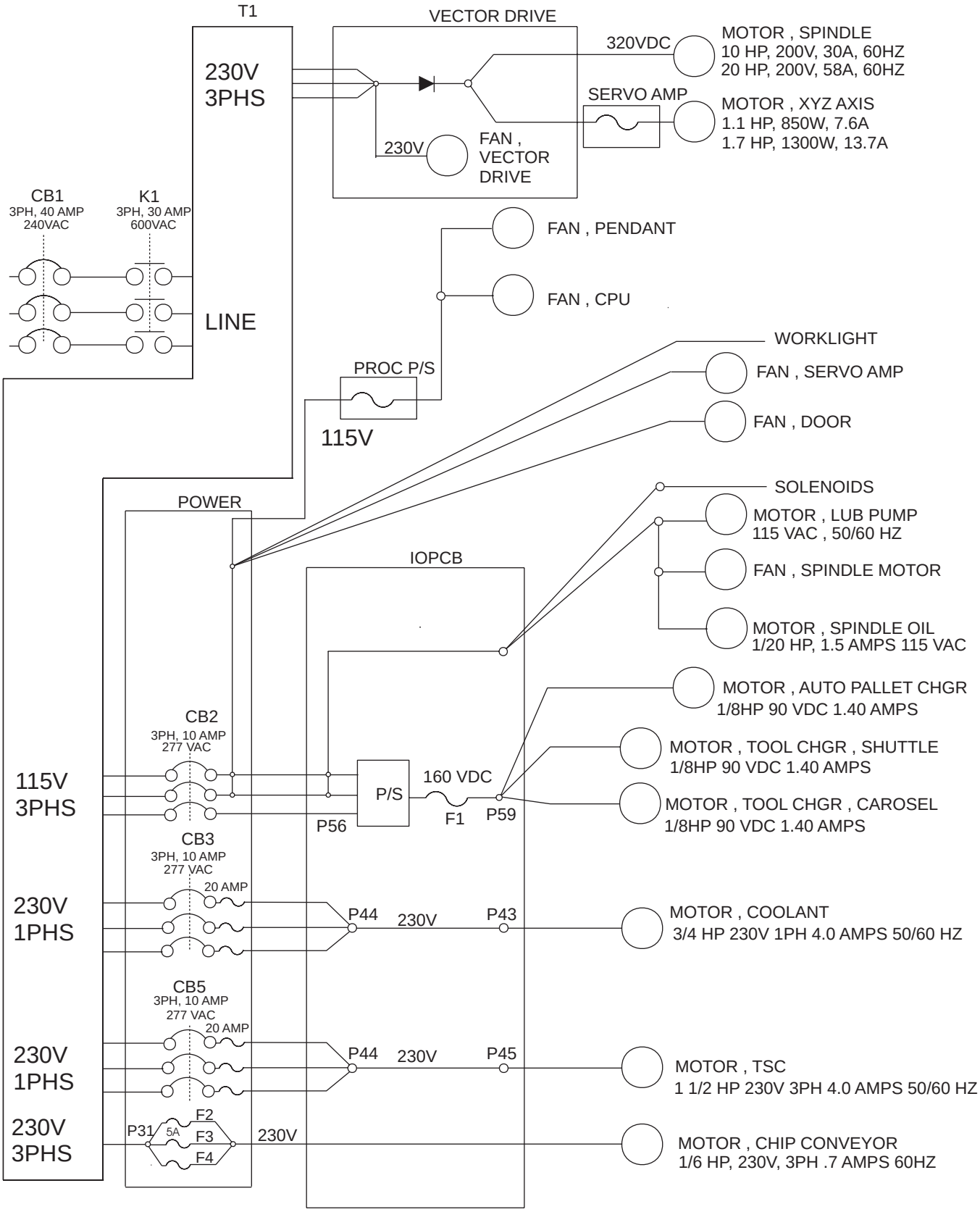

## Cables

### Cable 71/72/73, Power - K1 to Power Supply (33-0952A)

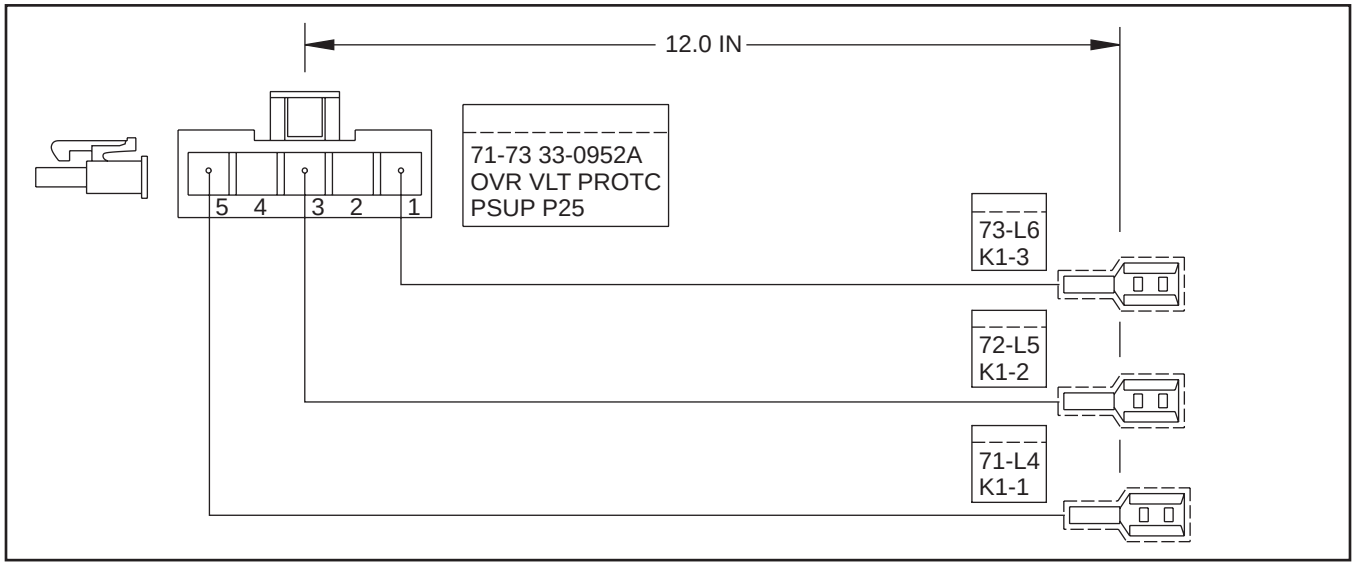


### Cable 77/78/79, 230V Transformer - Power Supply (33-0078B)

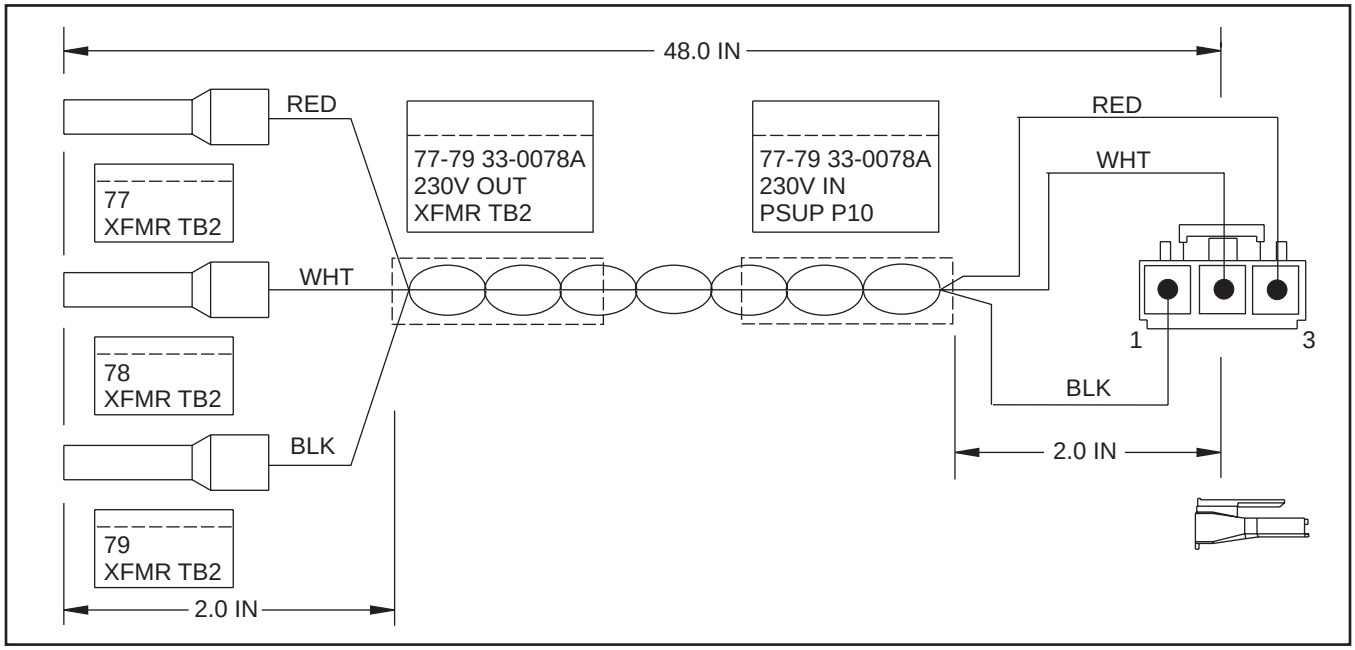

## Cable 90, 115V 3PH Power Supply - I/O PCB (33-0095A)

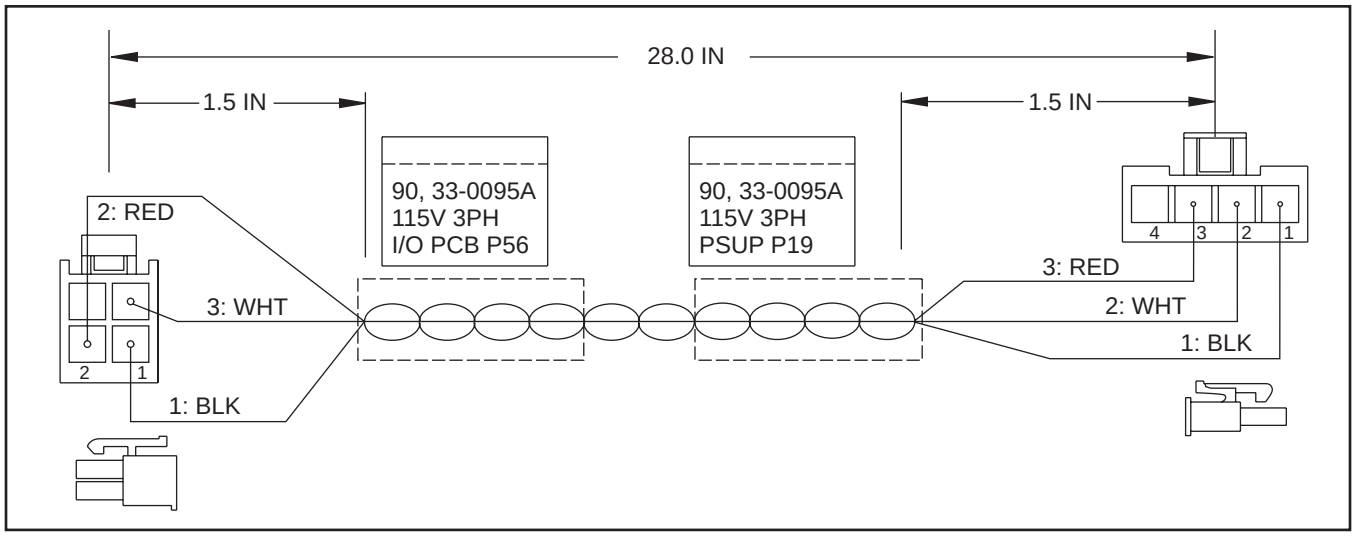


## Cable 90, 115V 1PH Power Supply - I/O PCB (33-0195A)

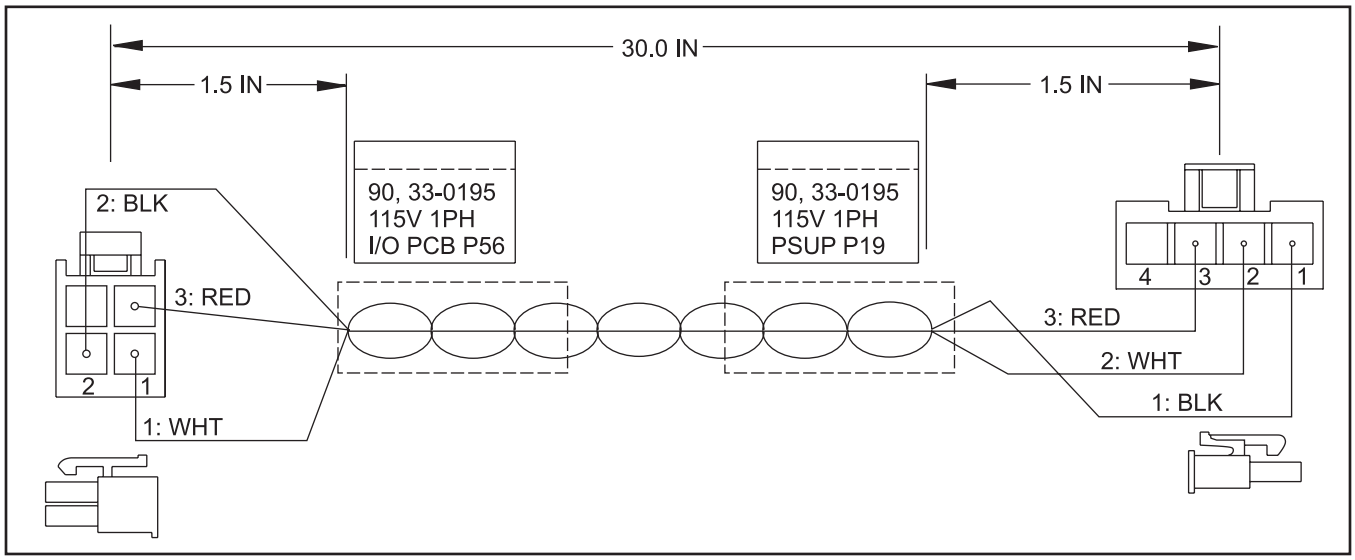

## Cable 90A, 115V LCD Low Voltage Power Supply (33-8250)

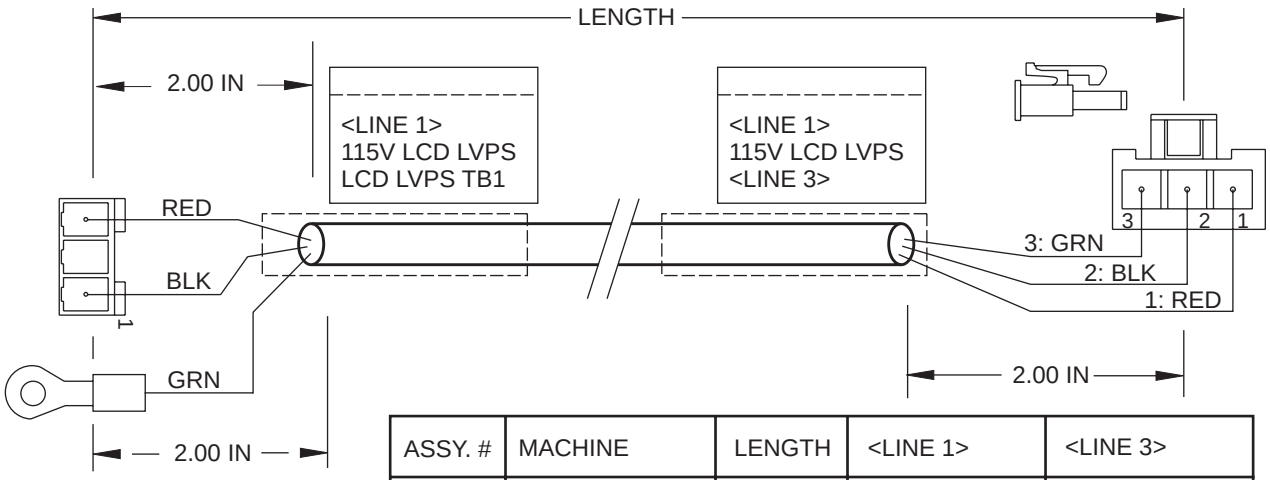


| ASSY. # | MACHINE | LENGTH | <LINE 1> | <LINE 3> |
|---|---|---|---|---|
| 33-8250 | VF 0-2, VB-1 | 12.00 FT | 90A, <ASSY#> | PSUP P11 |
| 33-8251 | MINI MILL | 12.00 FT | 90C, <ASSY#> | PSUP P16 |
| 33-8252 | ML | 9.50 FT | 90C, <ASSY#> | PSUP P16 |
| 33-8253 | SL-40 | 21.00 FT | 90A, <ASSY#> | PSUP P11 |
| 33-8254 | VF 6-11 | 18.17 FT | 90A, <ASSY#> | PSUP P11 |
| 33-8255 | VF 3-5, SL-20/30 | 14.50 FT | 90A, <ASSY#> | PSUP P11 |
| 33-8256 | HS (ALL) | 7.85 FT | 90A, <ASSY#> | PSUP P11 |
| 33-8257 | SL-40LB | 23.00 FT | 90A, <ASSY#> | PSUP P11 |
| 33-8258 | TRM | 10.00 FT | 90C, <ASSY#> | PSUP P16 |
| 33-8259 | VS-3 | 21.50 FT | 90A, <ASSY#> | BASE CARRIER |
| 33-8248 | OM-1/OL-1 | 6.00 FT | 90A, <ASSY#> | PSUP P11 |

## Cable 90B, Power to Low Voltage Power Supply 5-pin (33-0219A)

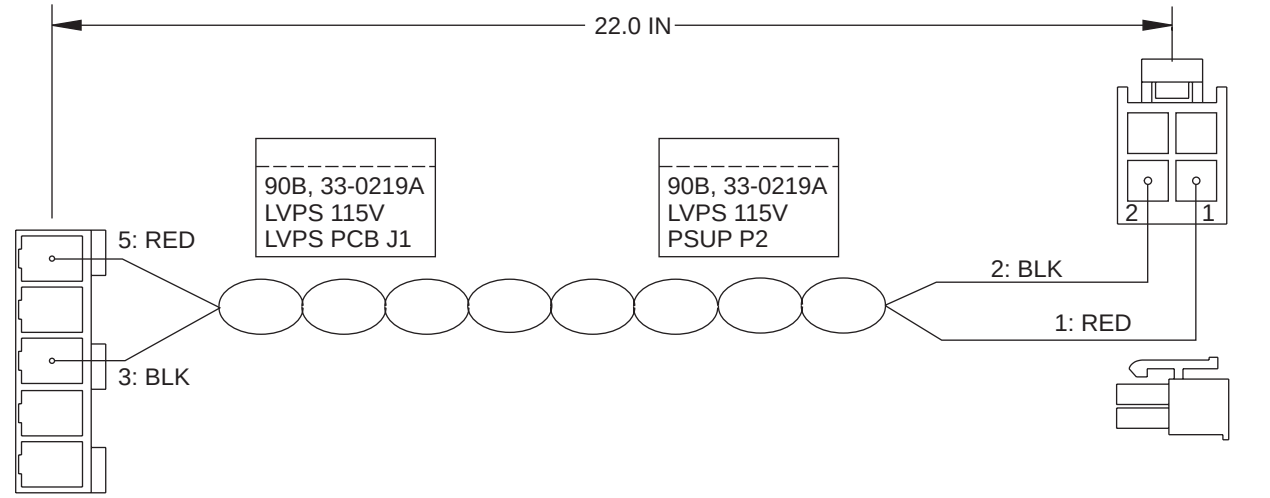

## Cable 90B Fan Cord - Vector Drive 2HD (33-1024A)

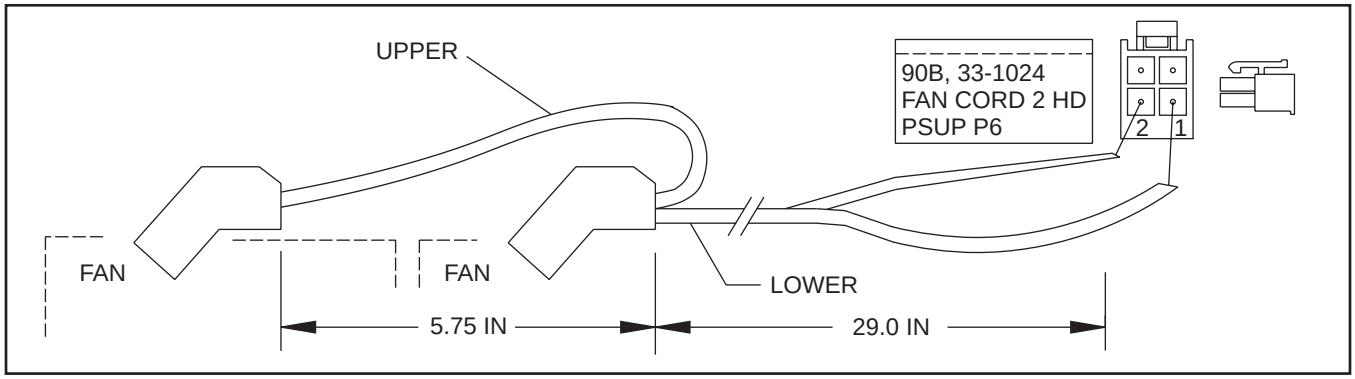


## Cable 90B Work Light (33-2330)

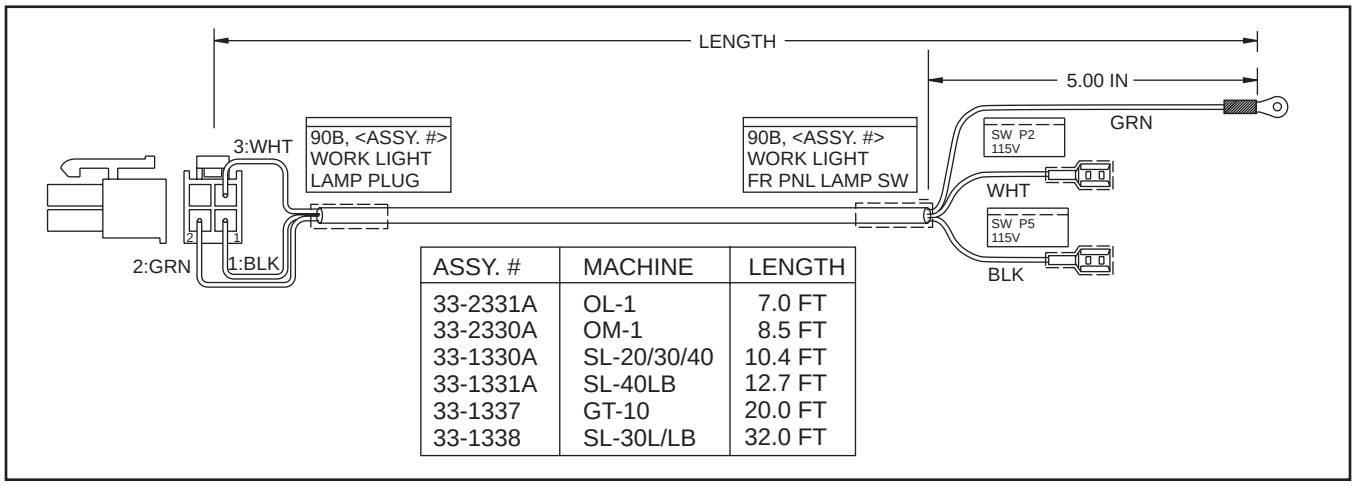


| ASSY. # | MACHINE | LENGTH |
|---|---|---|
| 33-2331A | OL-1 | 7.0 FT |
| 33-2330A | OM-1 | 8.5 FT |
| 33-1330A | SL-20/30/40 | 10.4 FT |
| 33-1331A | SL-40LB | 12.7 FT |
| 33-1337 | GT-10 | 20.0 FT |
| 33-1338 | SL-30L/LB | 32.0 FT |

## Cable 90C, Spindle Purge Air Solenoid (33-3550)

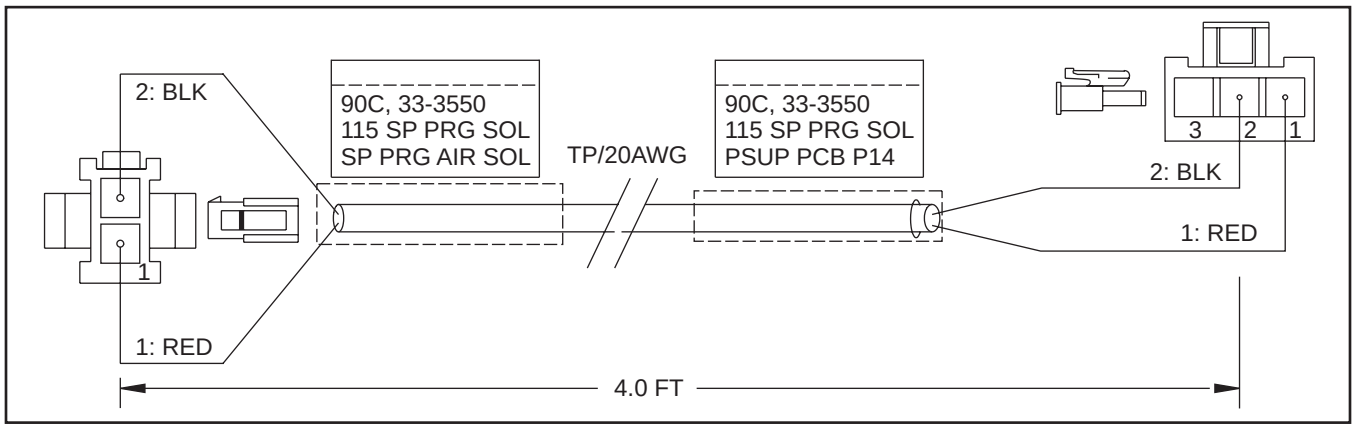

## Cable 90C, 115V Transformer Power Supply - 8' (33-6408)

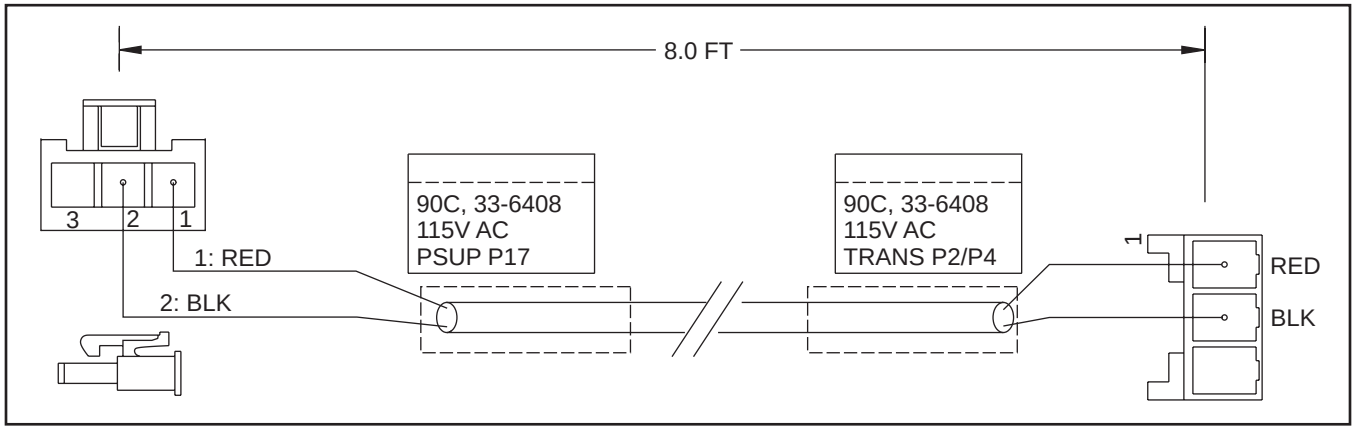


## Cable 90C, Spindle Fan - TL-15/SL-20 (33-8310C)

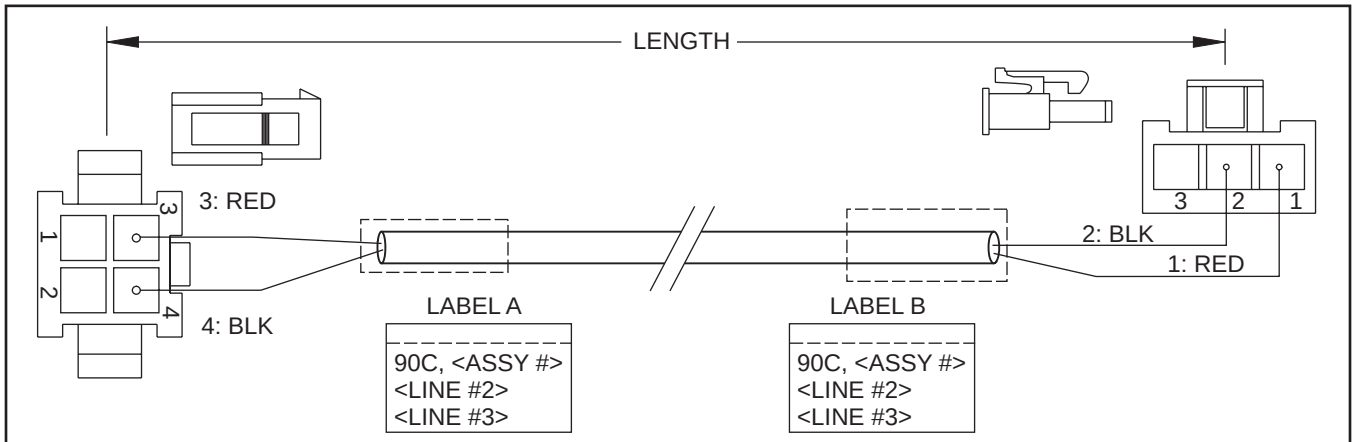


| ASSY# | LENGTH | LABEL A TEXT | | LABEL B TEXT | |
|---|---|---|---|---|---|
| | | <LINE #2> | <LINE #3> | <LINE #2> | <LINE #3> |
| 33-8310C | 8.00 FT | SP FAN PWR | SP FAN | SP FAN PWR | PSUP P14 |
| 33-8311C | 10.00 FT | SP FAN PWR | SP FAN | SP FAN PWR | PSUP P14 |
| 33-8312 | 8.00 FT | HPU FAN PWR | HPU FAN | HPU FAN PWR | PSUP P16 |
| 33-8315 | 23.00 FT | SP FAN PWR | SP FAN | SP FAN PWR | PSUP P14 |

## Cable 94/95/96, 115V 3PH to Power Supply (33-0905E)

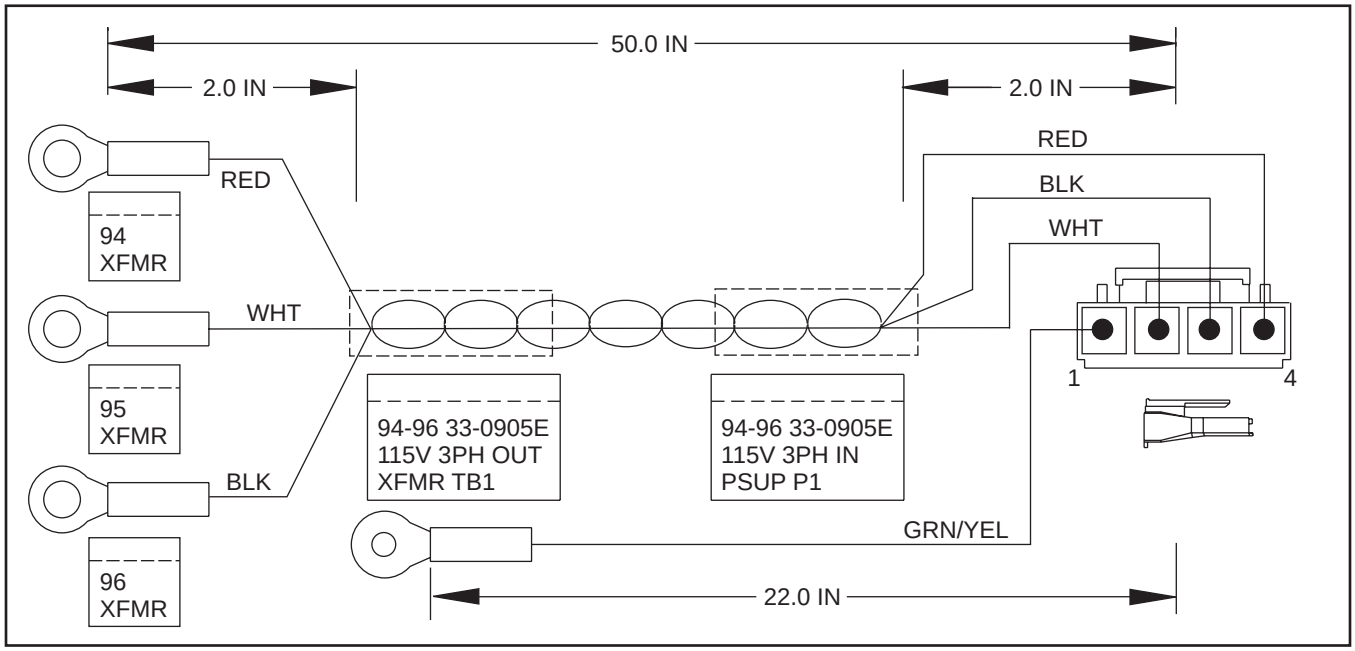


## Cable 100, M-FIN Function w/MCD (33-0101)

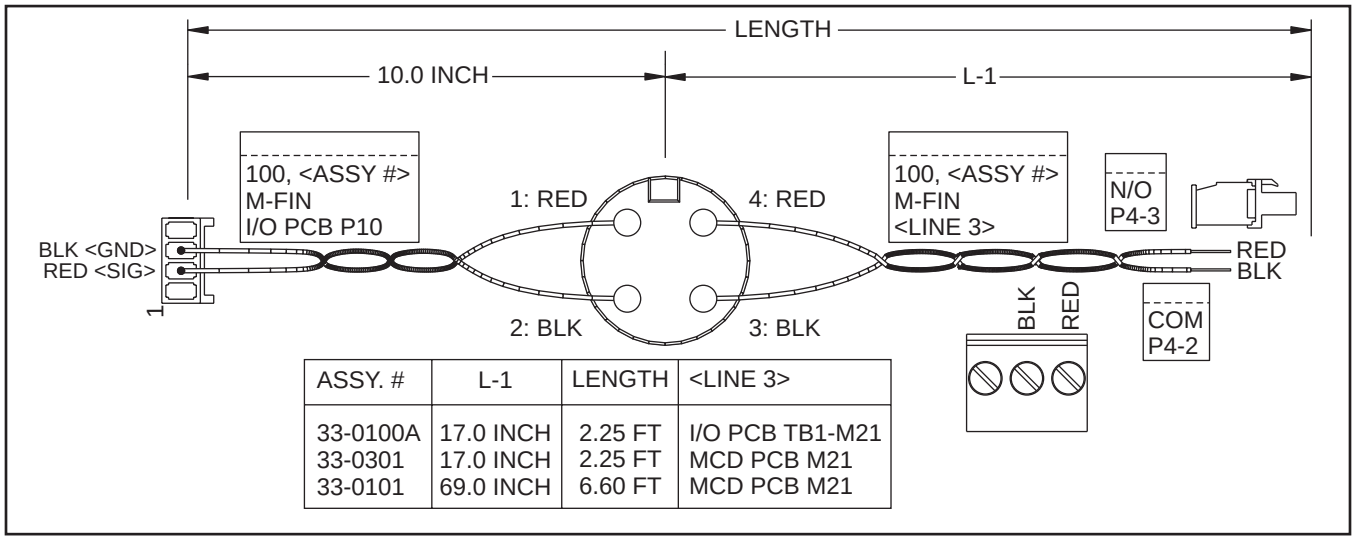


| ASSY. # | L-1 | LENGTH | <LINE 3> |
|---|---|---|---|
| 33-0100A | 17.0 INCH | 2.25 FT | I/O PCB TB1-M21 |
| 33-0301 | 17.0 INCH | 2.25 FT | MCD PCB M21 |
| 33-0101 | 69.0 INCH | 6.60 FT | MCD PCB M21 |

## Cable 140A, Chip Conveyor Enable/Reverse (33-0149)

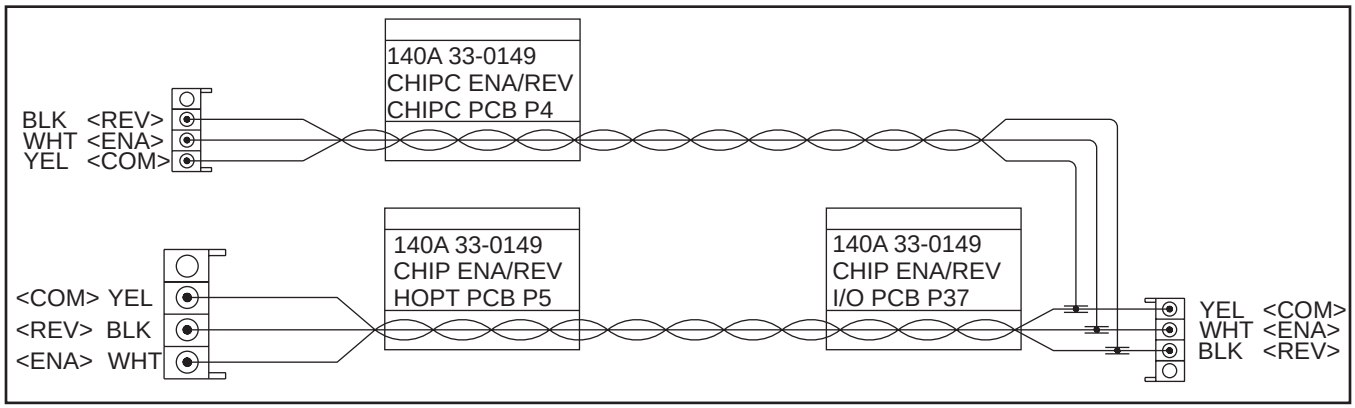


## Cable 140A, Left Chip Conveyor Enable/Reverse (33-0164A)

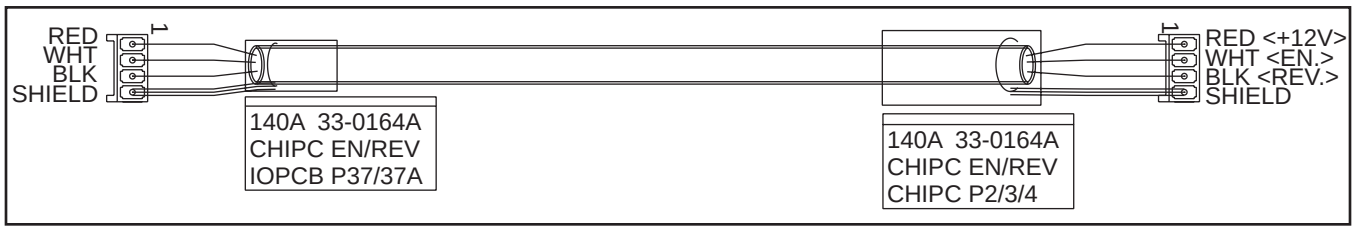


## Cable 160, Chip Conveyor 230V (33-0160D)

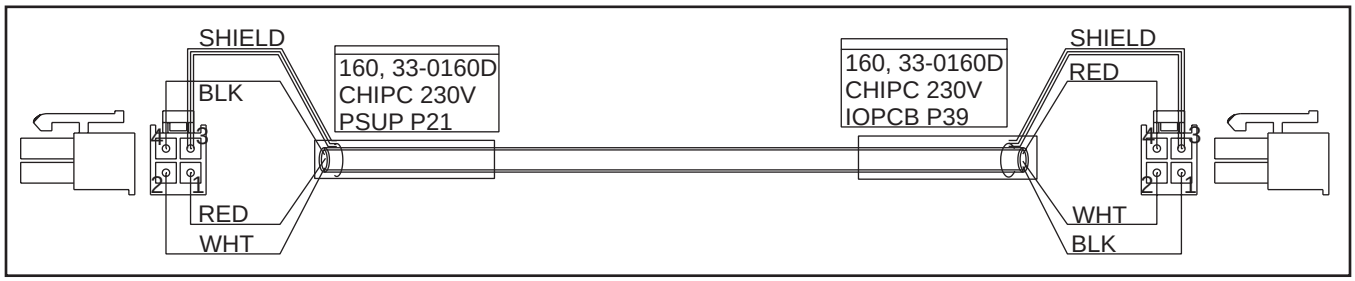


## Cable 170, Aux/Coil 30hp Contactor (33-0179A)

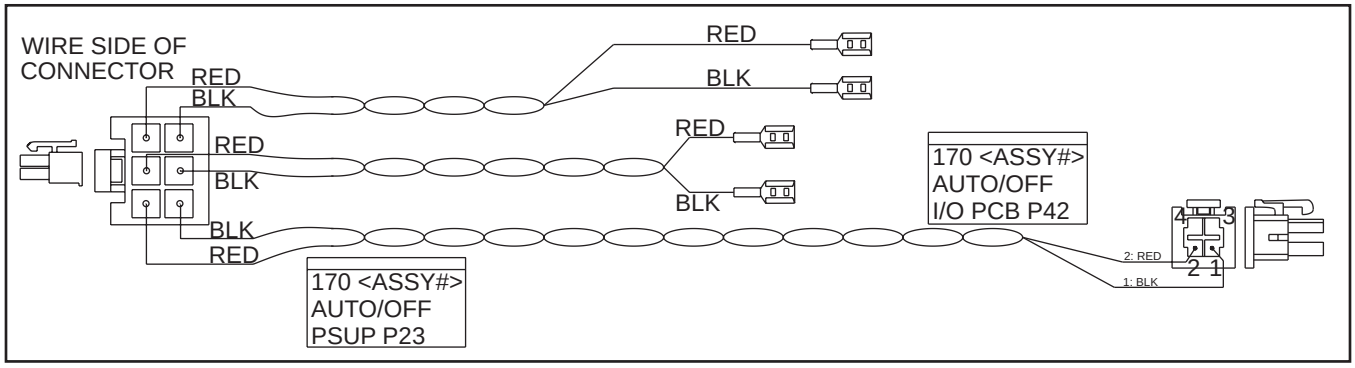

## Cable 190, Tool Release (33-0190C)

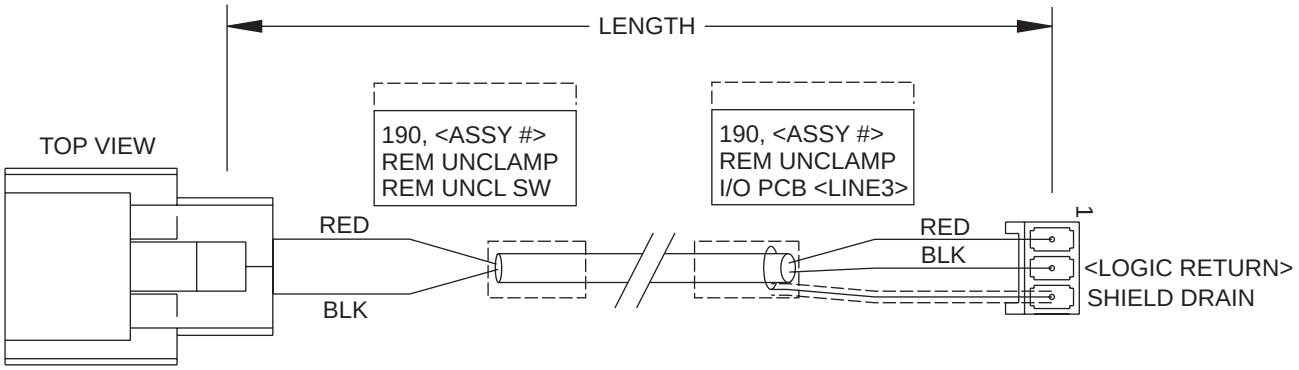


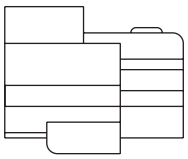


| ASSY. # | MACHINE | <LINE 3> | LENGTH (IN) | LENGTH (FT) | TOLERANCE |
|---|---|---|---|---|---|
| 33-0190C | VF 0-2 | P19 | 176.00 IN | 14.67 FT | ±3.50 IN |
| 33-3190C | VB-1 | P19 | 444.00 IN | 37.00 FT | ±1.5% OF LENGTH |
| 33-4190 | ML | P19 | 60.00 IN | 5.00 FT | ±2.00 IN |
| 33-5190A | VR-11B | P19 | 282.00 IN | 23.50 FT | ±1.5% OF LENGTH |
| 33-6190C | VF 6-11 | P19 | 264.00 IN | 22.00 FT | ±1.5% OF LENGTH |
| 33-7190C | VF 3-5 | P19 | 201.00 IN | 16.75 FT | ±3.50 IN |
| 33-8190A | VS-3 | P19 | 372.00 IN | 31.00 FT | ±1.5% OF LENGTH |
| 33-8290A | GR-510/512 | P19 | 564.00 IN | 47.00 FT | ±1.5% OF LENGTH |
| 33-8291 | GR-712 | P19 | 588.00 IN | 49.00 FT | ±1.5% OF LENGTH |
| 33-9190 | HS-3/3R | P19 | 294.00 IN | 24.50 FT | ±1.5% OF LENGTH |
| 33-9191 | OL-1 | P49 | 126.00 IN | 10.50 FT | ±3.00 IN |

## Cable 190, Tool Release (33-1900)

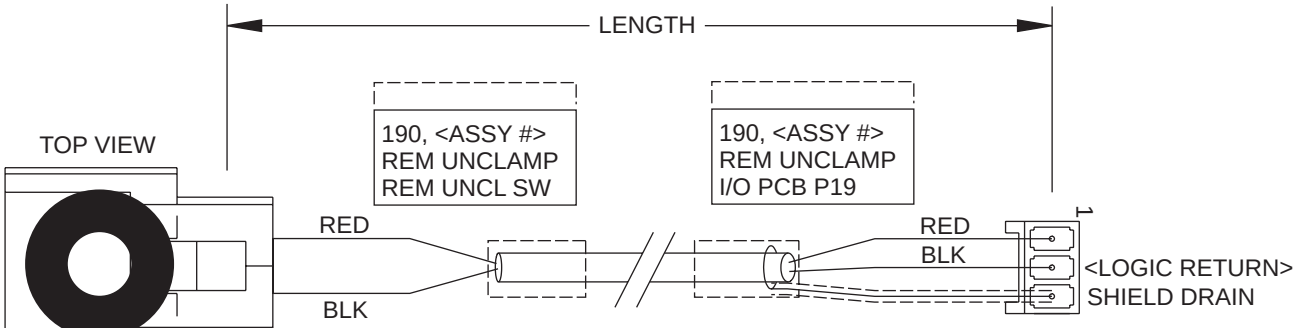


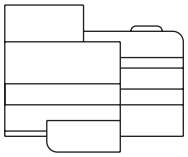


| ASSY. # | MACHINE | LENGTH | TOLERANCE |
|---|---|---|---|
| 33-1900 | VF 5/50T | 13.00 FT | ±3.00 IN |
| 33-1901 | VF 6-11/50T | 19.70 FT | ±3.50 IN |
| 33-1902 | VS-1/3 | 31.00 FT | ±1.5% OF LENGTH |
| 33-1903 | EC-1600 | 23.00 FT | ±1.5% OF LENGTH |

## 190/240/260/710/770A Front Enclosure Signal Receptacle (32-6660B)

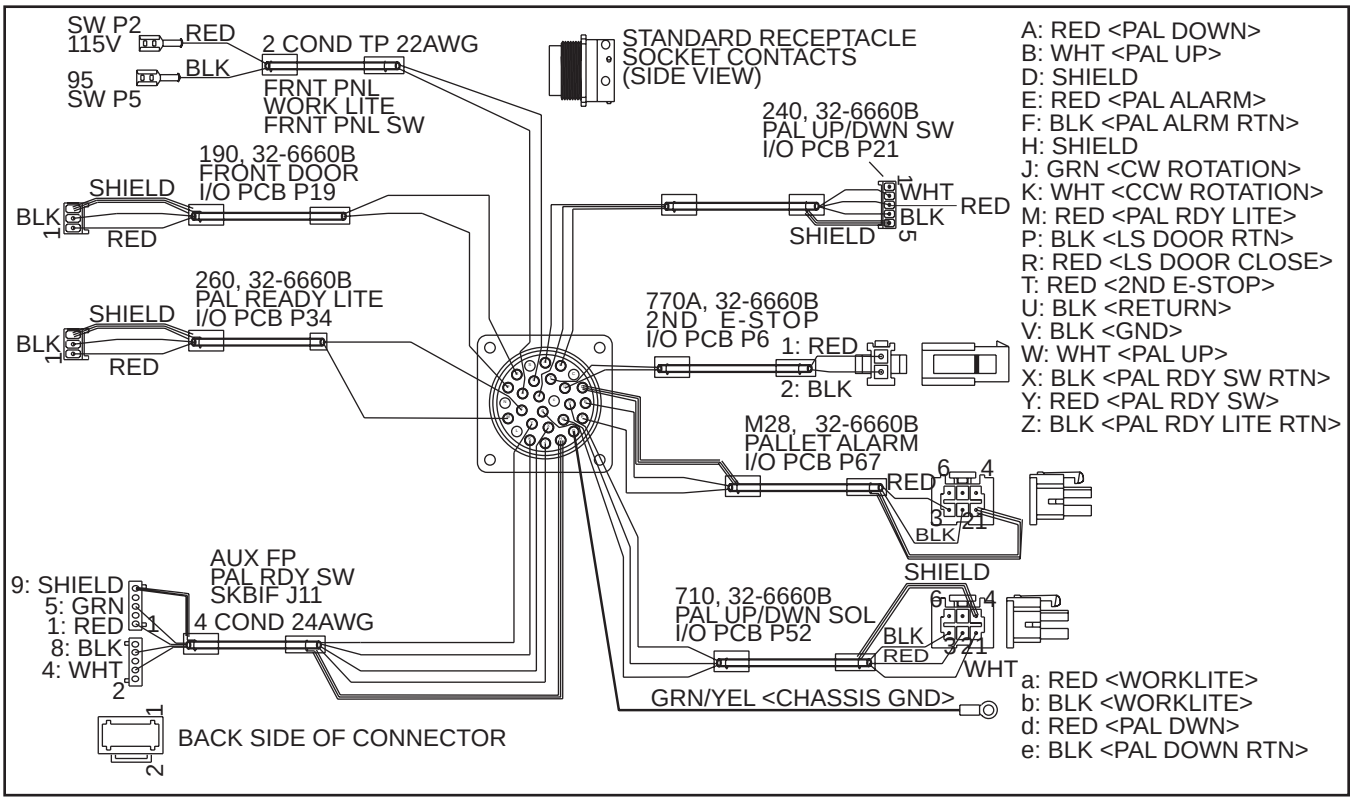


## Cable 200, Programmable Coolant (33-0202)

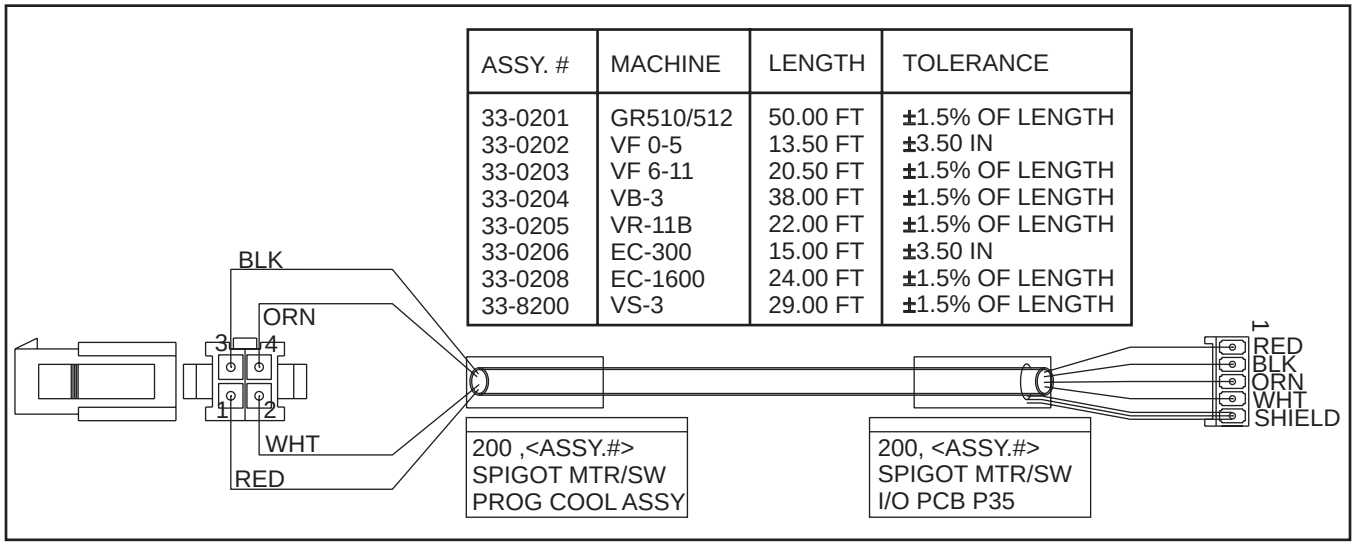


| ASSY. # | MACHINE | LENGTH | TOLERANCE |
|---|---|---|---|
| 33-0201 | GR510/512 | 50.00 FT | ±1.5% OF LENGTH |
| 33-0202 | VF 0-5 | 13.50 FT | ±3.50 IN |
| 33-0203 | VF 6-11 | 20.50 FT | ±1.5% OF LENGTH |
| 33-0204 | VB-3 | 38.00 FT | ±1.5% OF LENGTH |
| 33-0205 | VR-11B | 22.00 FT | ±1.5% OF LENGTH |
| 33-0206 | EC-300 | 15.00 FT | ±3.50 IN |
| 33-0208 | EC-1600 | 24.00 FT | ±1.5% OF LENGTH |
| 33-8200 | VS-3 | 29.00 FT | ±1.5% OF LENGTH |

## Cable 210, Floppy Drive DTA VF0-2/VB-1 (33-0210A)

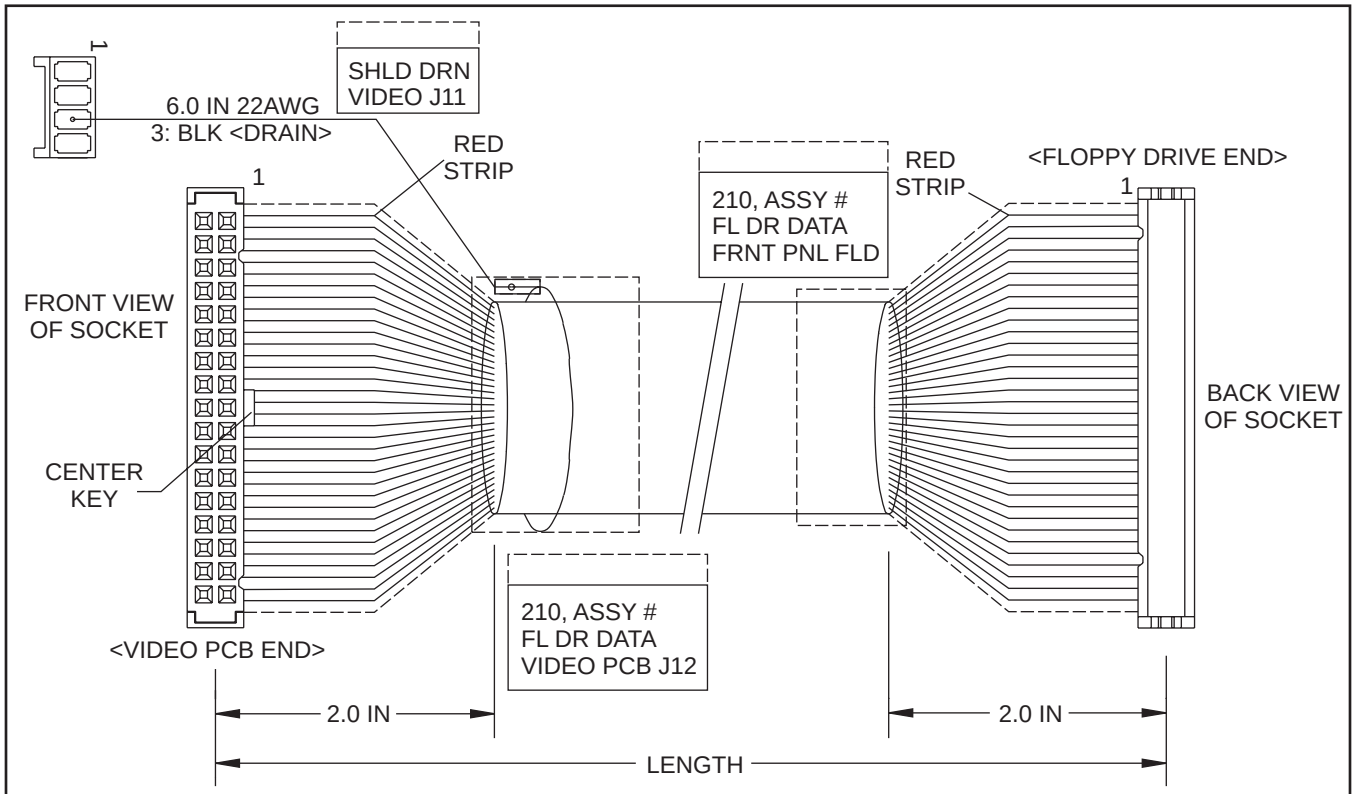


| ASSY. # | MACHINE | LENGTH | TOLERANCE |
|---|---|---|---|
| 33-0210A | VF0-2, VB-1 | 12.00 FT | ±3.00 IN |
| 33-1210B | CSM (ALL) | 1.50 FT | ±0.50 IN |
| 33-6210A | VF/R6-11 | 19.00 FT | ±3.50 IN |
| 33-7210A | VF3-5, SL (ALL) | 15.00 FT | ±3.50 IN |
| 33-8210A | HS (ALL) | 6.00 FT | ±2.00 IN |
| 33-6211 | TM-1/2 OFFICE MACHINES | 9.00 FT | ±2.00 IN |

## Cable 230, Tailstock Control - Forward (33-1988)

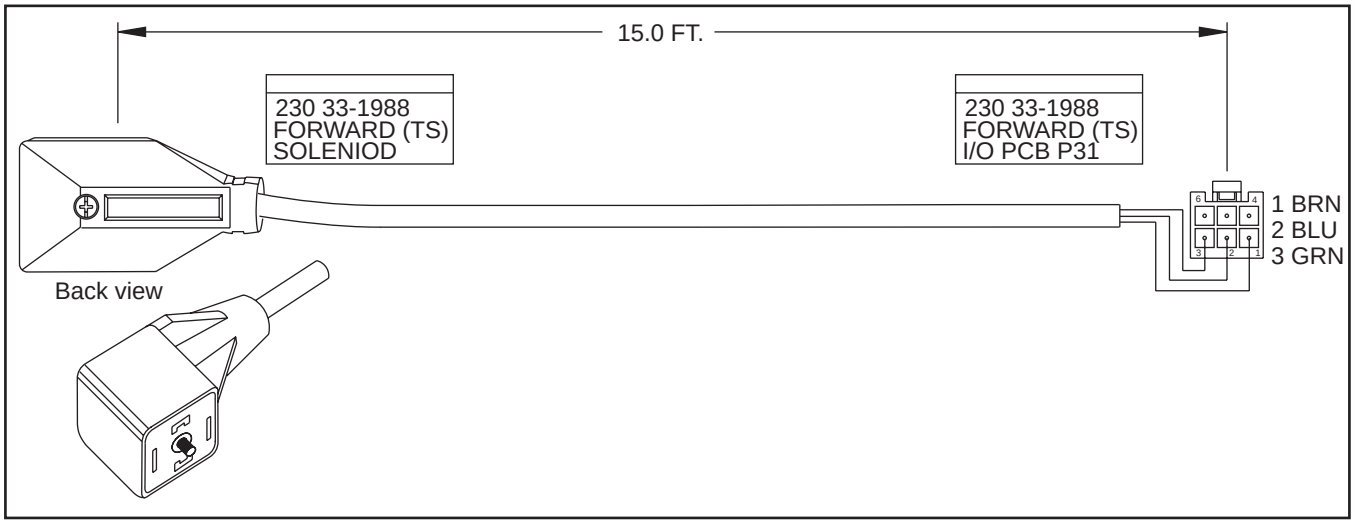

## Cable 240, Pallet Up/Down Switch (33-0113)

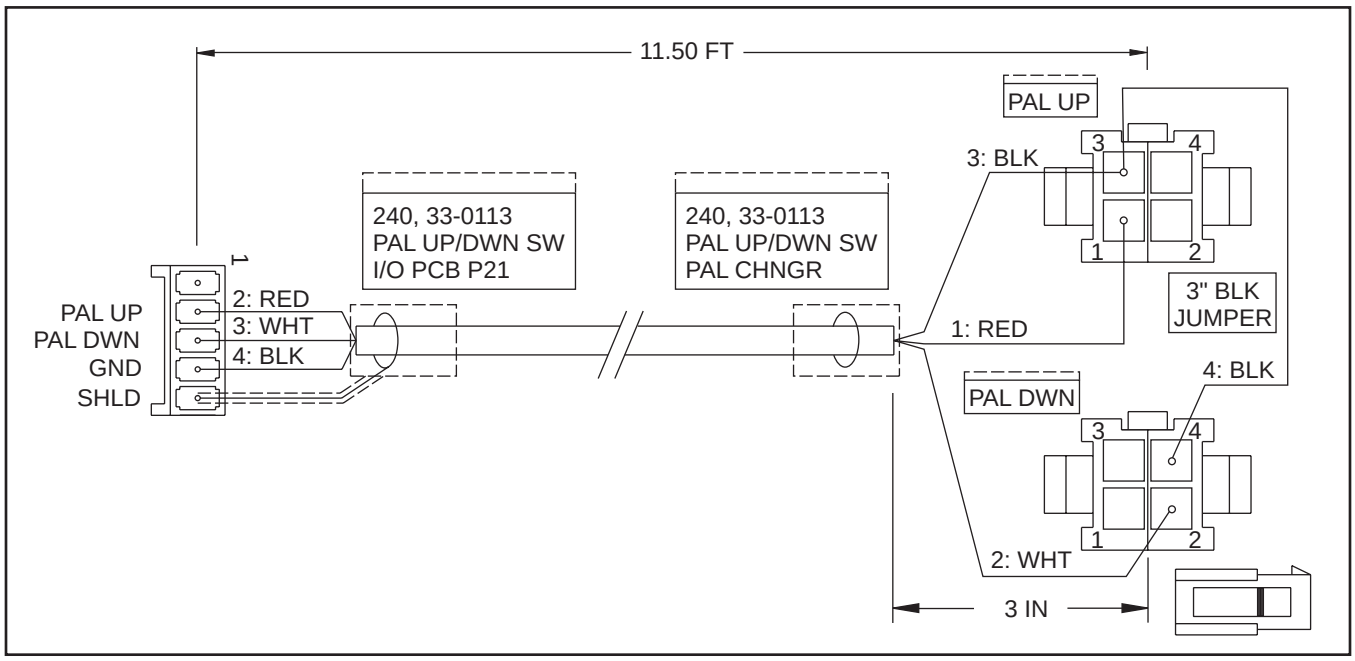


## Cable 240/260/430/770A/790 Aux. Front Panel Signal Receptacle (32-6670)

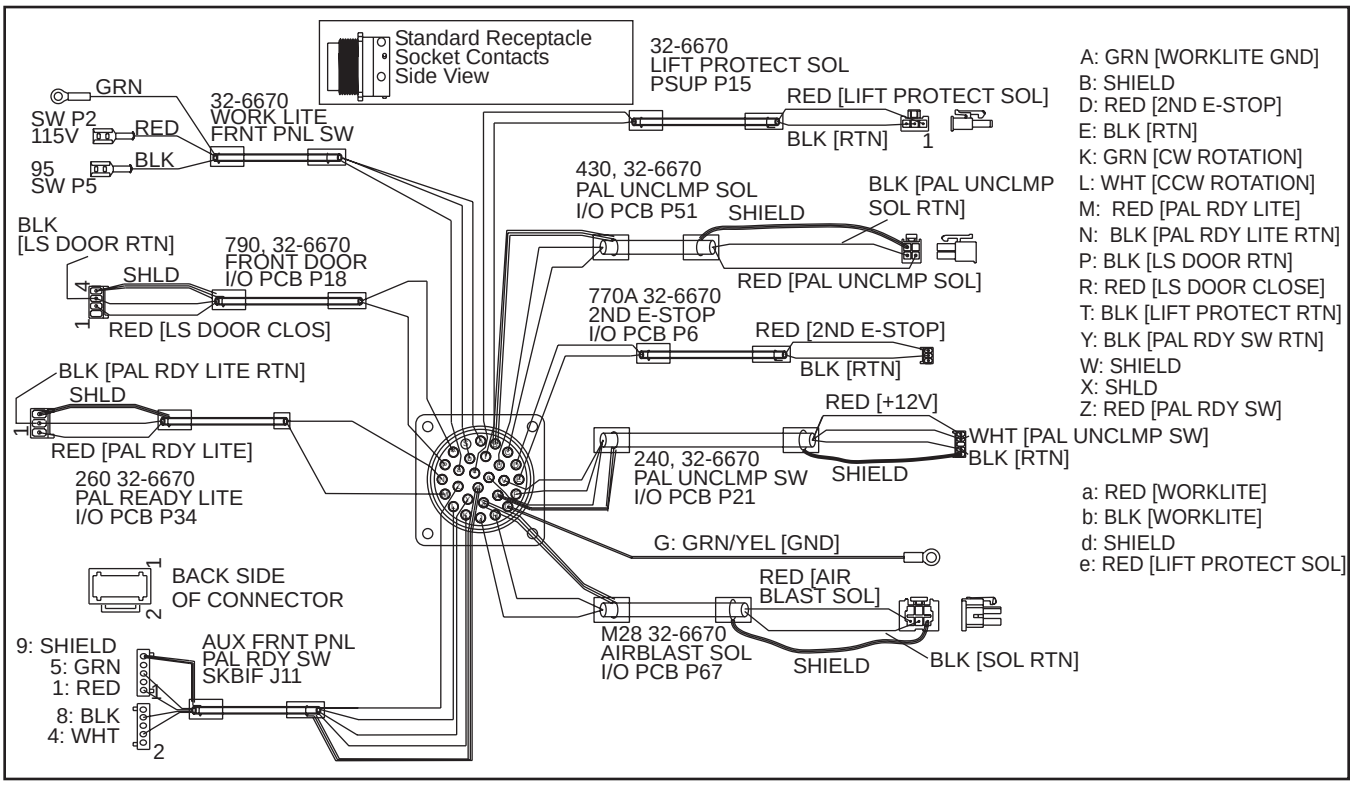

## Cable 240/260/430/770A/790 Aux. Front Panel Signal Cable (32-6665A)

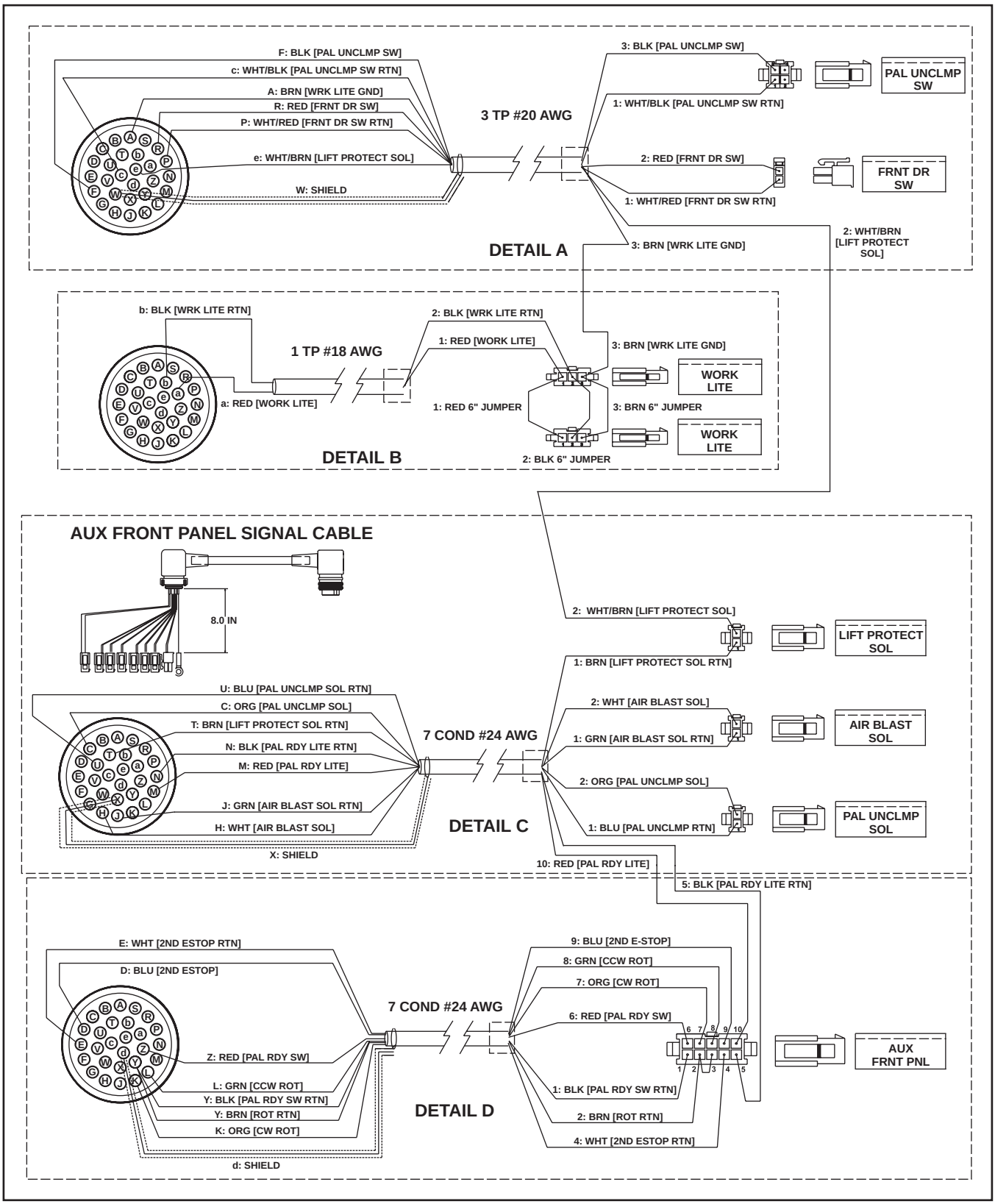

## Cable 240/260/430/770A/790 Aux. Front Panel Signal Receptacle (32-6667B)

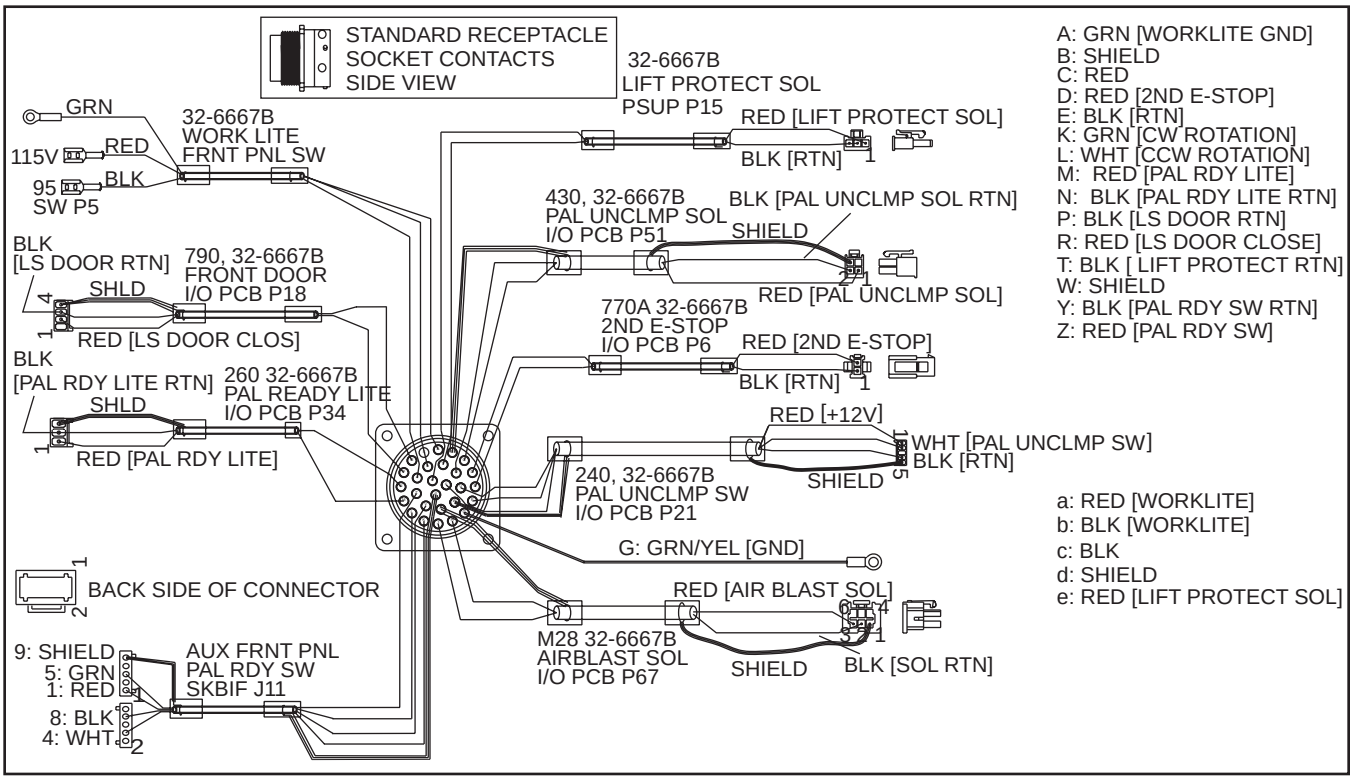


## Cable 250, Tailstock Control - Reverse (33-1989)

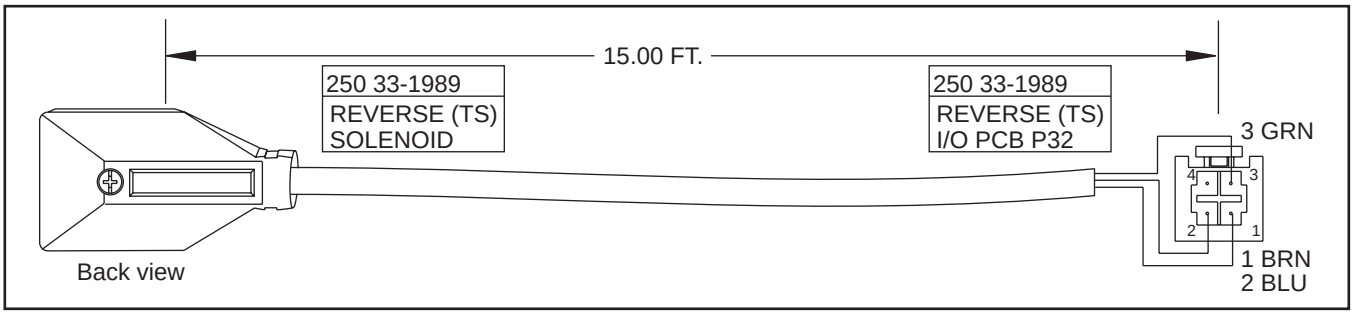

## Cable 250 Mori T/C Receptacle Outputs (33-8155A)

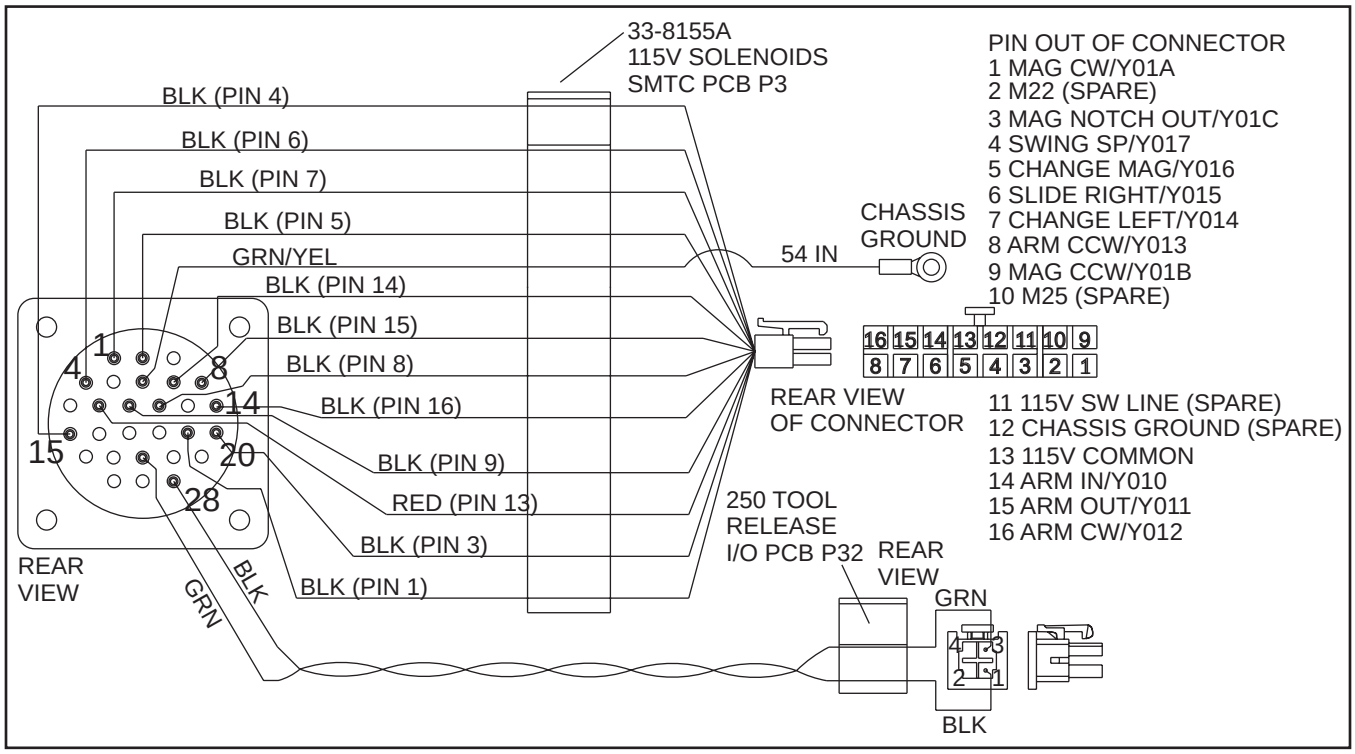


## Cable 260, Ready Lamp - EC-300 (33-8105)

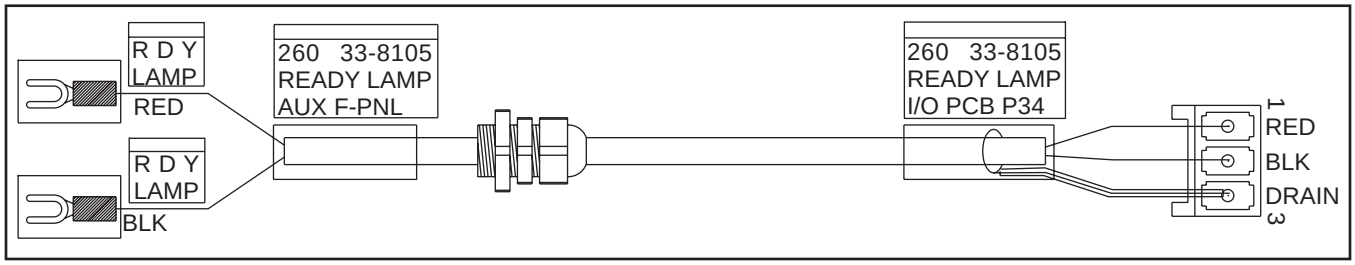


## Cable 270, Tailstock Control - Rapid (33-1987)

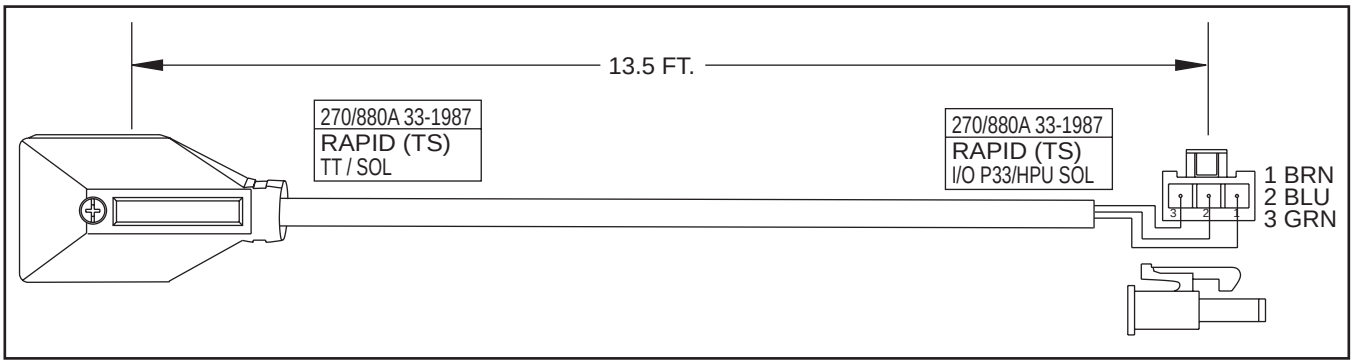

## Cable 280, Haas Beacon (33-1035A)

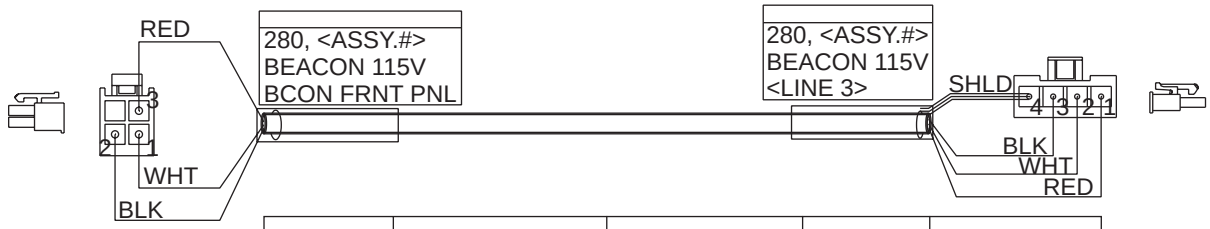


| ASSY. # | MACHINE | <LINE 3> | LENGTH | TOLERANCE |
|---|---|---|---|---|
| 33-1035A | VF0-5, SL20/30 | IOPCB P36 | 17.75 FT | ±3.50 IN |
| 33-1036A | VF6-11 | IOPCB P36 | 21.75 FT | ±3.50 IN |
| 33-1037C | SL-40 | IOPCB P36 | 22.00 FT | ±3.50 IN |
| 33-1039C | VB1/3, HS-3 | IOPCB P36 | 13.50 FT | ±3.50 IN |
| 33-8160B | VS-3 | BASE CAPPER | 22.00 FT | ±3.50 IN |

## Cable 300, Spindle Fan/Lube Pump (33-1333)

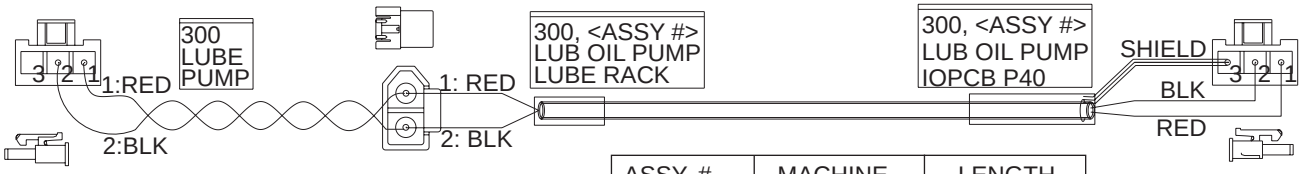


| ASSY. # | MACHINE | LENGTH |
|---|---|---|
| 33-1333 | VF0-11 | 2.75 FT |
| 33-1343 | SL-10/30/40 | 10.50 FT |
| 33-1353 | SL-20 | 7.50 FT |
| 33-1363A | SL-40L | 13.50 FT |

## Cable 300A, Gearbox Oil Pump - SL-30/40 (33-8168)

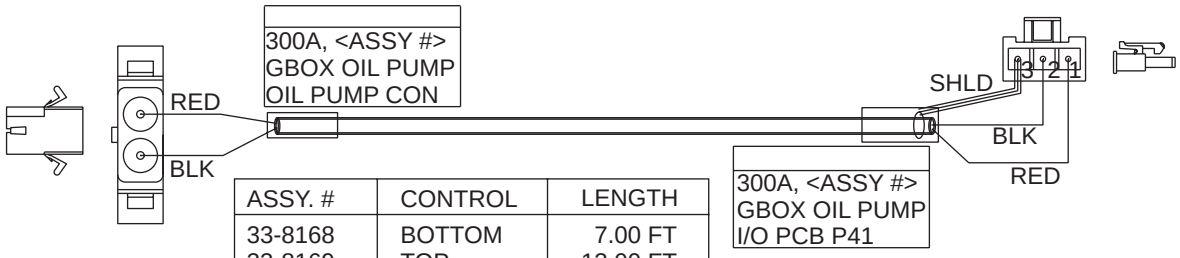


| ASSY. # | CONTROL | LENGTH |
|---|---|---|
| 33-8168 | BOTTOM | 7.00 FT |
| 33-8169 | TOP | 13.00 FT |
| 33-8175A | BOTTOM | 16.00 FT |

## Cable 310, Door Open (33-2300)

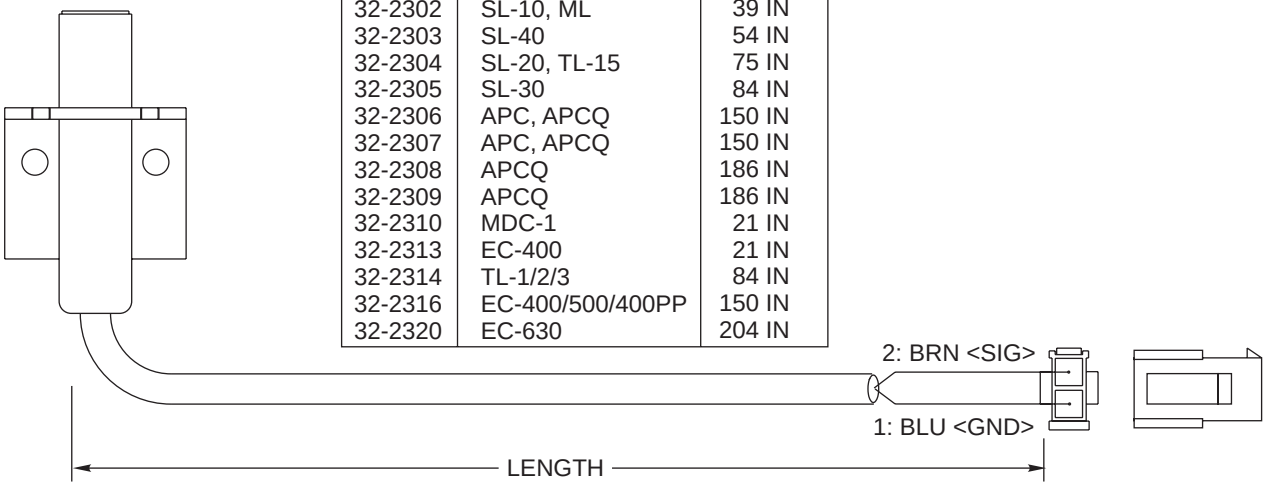


| ASSY. # | MACHINE | LENGTH |
|---|---|---|
| 32-2300 | LATHES | 18 IN |
| 32-2301 | MM, SMM | 12 IN |
| 32-2302 | SL-10, ML | 39 IN |
| 32-2303 | SL-40 | 54 IN |
| 32-2304 | SL-20, TL-15 | 75 IN |
| 32-2305 | SL-30 | 84 IN |
| 32-2306 | APC, APCQ | 150 IN |
| 32-2307 | APC, APCQ | 150 IN |
| 32-2308 | APCQ | 186 IN |
| 32-2309 | APCQ | 186 IN |
| 32-2310 | MDC-1 | 21 IN |
| 32-2313 | EC-400 | 21 IN |
| 32-2314 | TL-1/2/3 | 84 IN |
| 32-2316 | EC-400/500/400PP | 150 IN |
| 32-2320 | EC-630 | 204 IN |

## Cable 350/350A, Axis Brake (33-0904B)

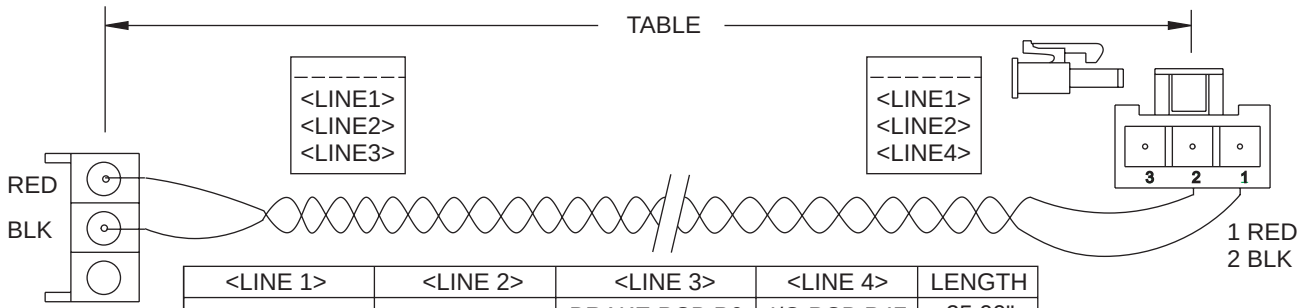


| <LINE 1> | <LINE 2> | <LINE 3> | <LINE 4> | LENGTH |
|---|---|---|---|---|
| 350 33-0904B | AXIS BRAKE | BRAKE PCB P6 | I/O PCB P47 | 25.00" |
| 350A 33-0906A | HYD PMP EN | TRANS PCB P4 | I/O PCB P49 | 23.00" |
| 350A 33-0908 | 1AXIS BRAKE | BRAKE PCB P6 | I/O PCB P49 | 27.00" |

## Cable 350, Z-Axis Brake (33-0907)

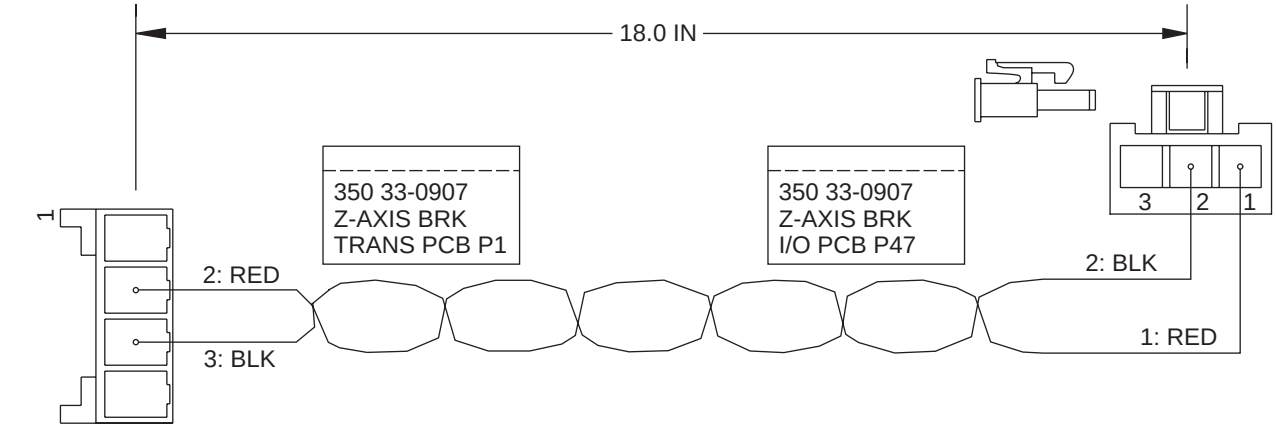

## Cable 350A, Hydraulic Pump Contactor (33-0352B)

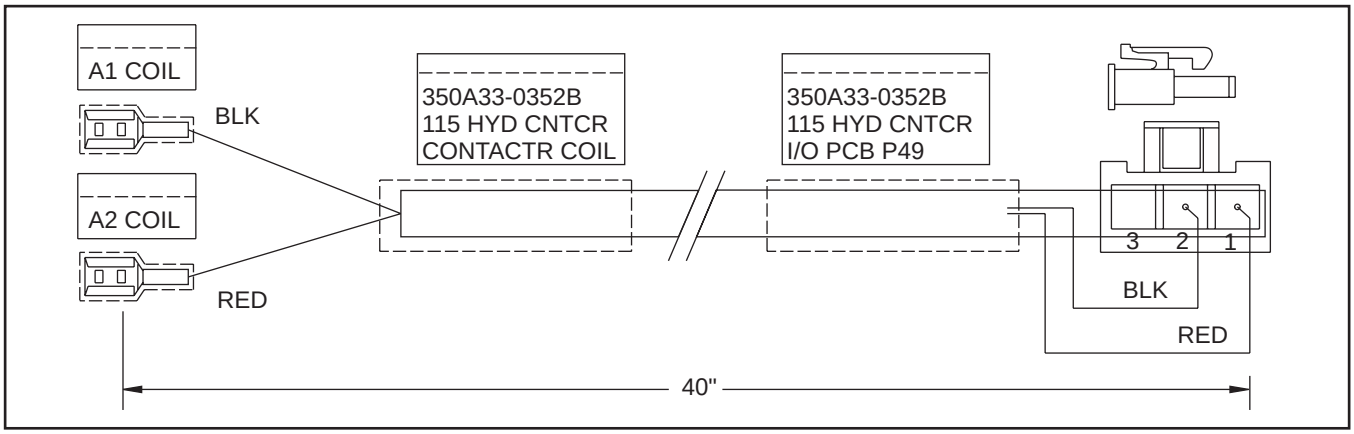


## Cable 390, 115V 4th Axis Brake (33-8511)

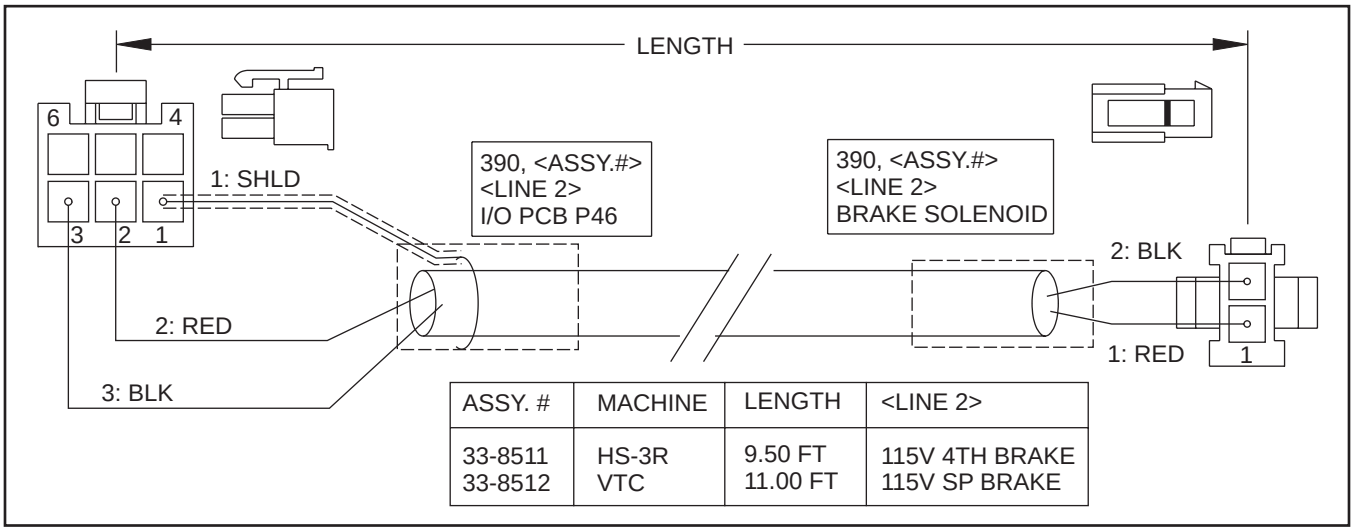


| ASSY. # | MACHINE | LENGTH | <LINE 2> |
|---|---|---|---|
| 33-8511<br>33-8512 | HS-3R<br>VTC | 9.50 FT<br>11.00 FT | 115V 4TH BRAKE<br>115V SP BRAKE |

## Cable 410, Tool Changer Door Switch (33-9825A)

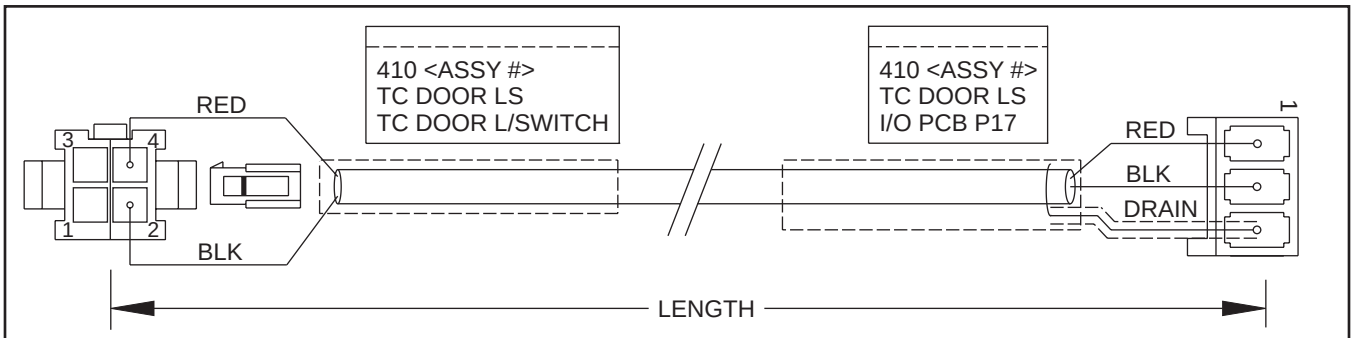


| ASSY. # | MACHINE | LENGTH | TOLERANCE |
|---|---|---|---|
| 33-9825A | HS-1 (ALL) | 15.00 FT | ±3.00 IN |
| 33-9821A | HS-2/3 | 5.50 FT | ±2.00 IN |
| 33-9829 | EC-300 | 20.75 FT | ±3.50 IN |
| 33-9830 | GR-408 | 28.00 FT | ±4.00 IN |
| 33-9831 | GR-510/512/<br>710/712 | 48.00 FT | ±5.00 IN |

## Cable 420/440/450/460/470/770B Mori T/C Receptacle Inputs (33-8150C)

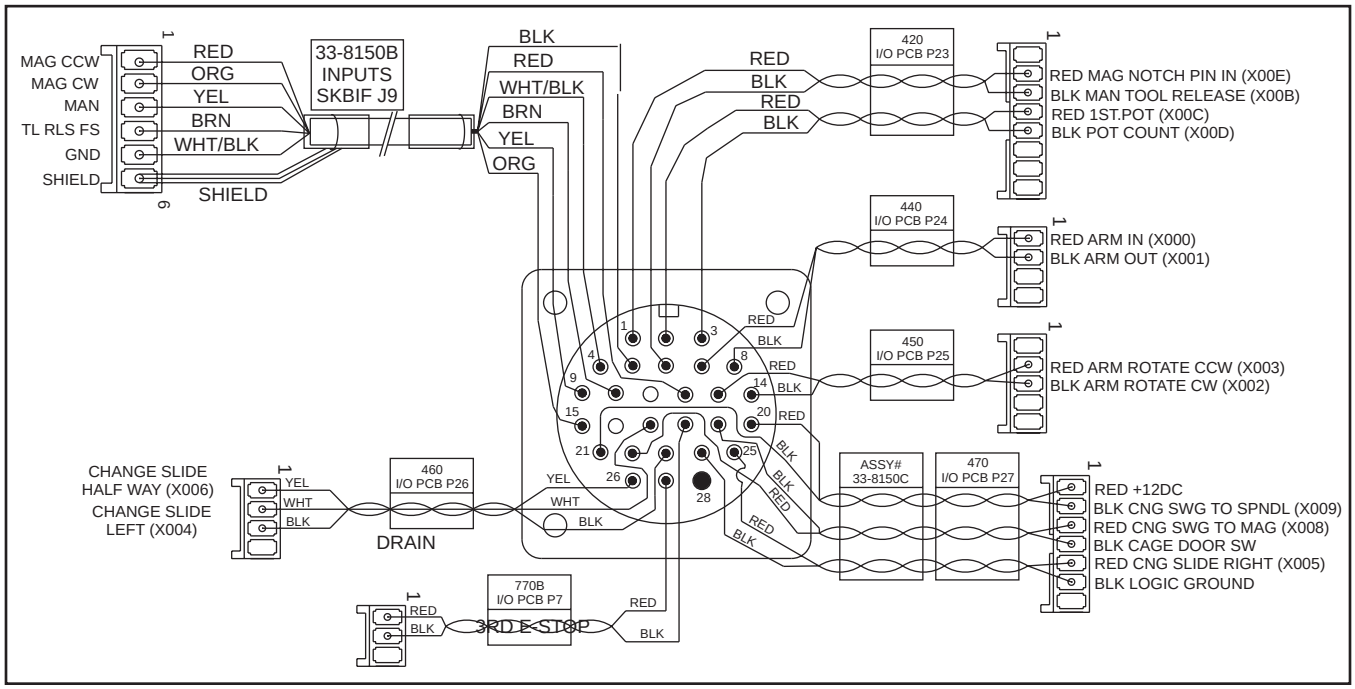


## Cable 420/430/470/810 Side-Mount Tool Changer Amphenol Cable Assembly (33-0822)

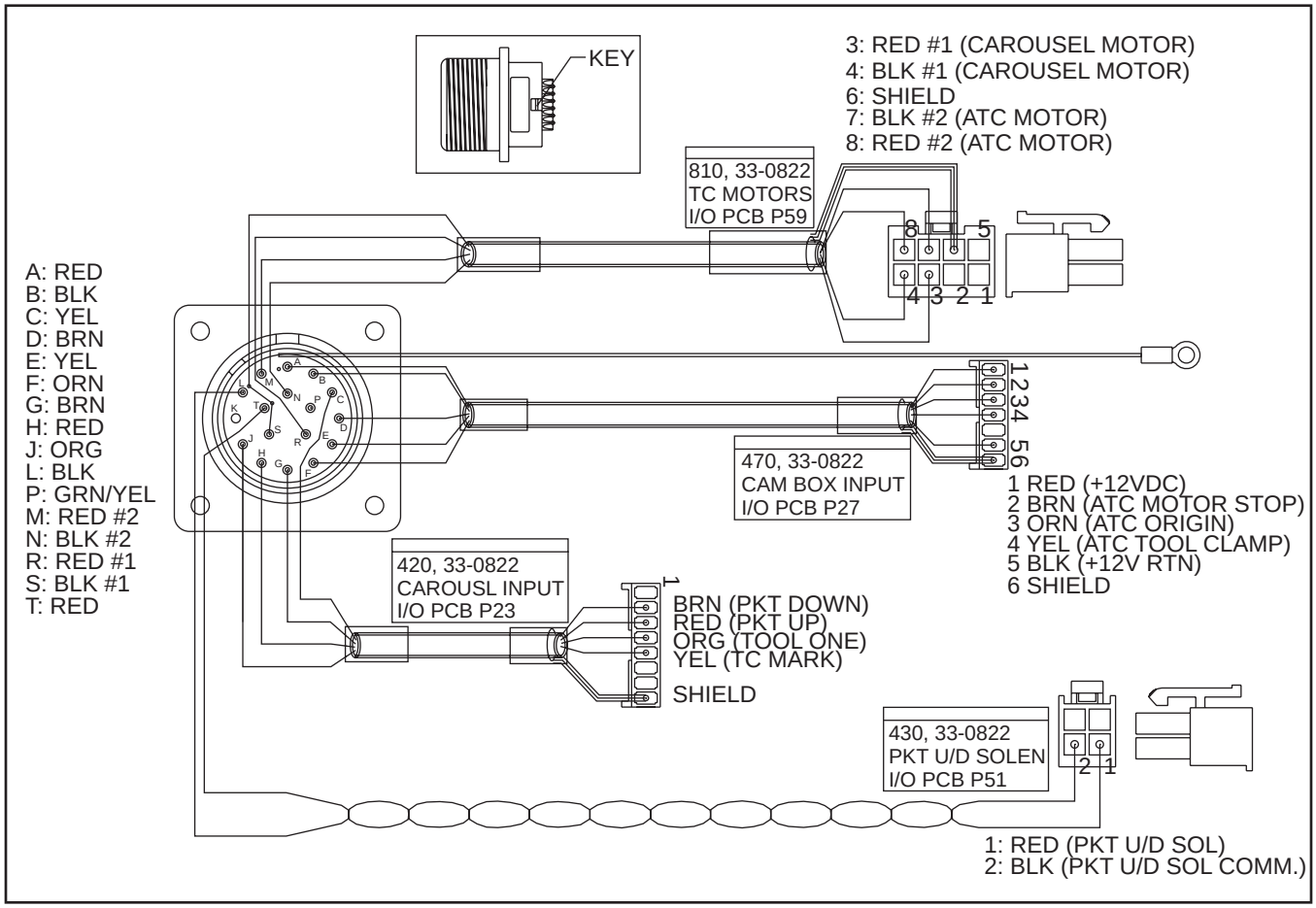

## Cable 510, I/O PCB to MOCON - No Shield (33-0515A)

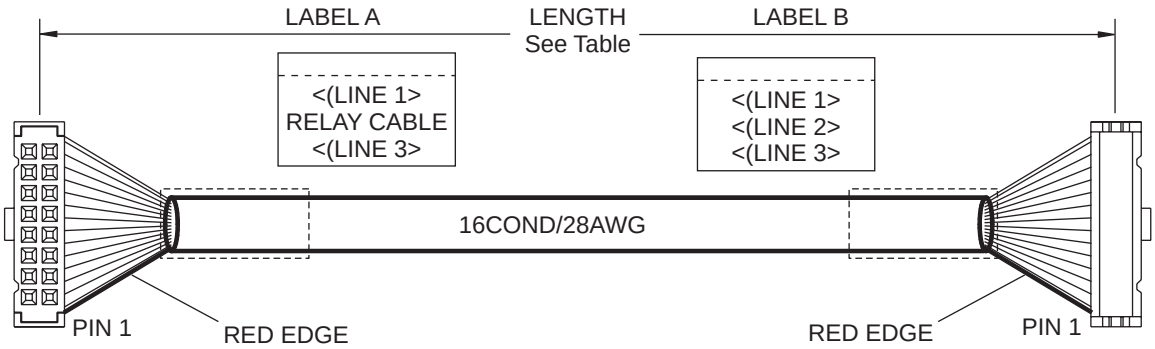


| ASSY. # | LABEL A & B <LINE 1> | LABEL B <LINE 2> | LABEL A <LINE 3> | LABEL B <LINE 3> | LENGTH |
|---|---|---|---|---|---|
| 33-0515 | 510, 33-0515A | RELAY CABLE | MOCON P11 | I/O PCB P65 | 46.0 IN |
| 33-0525 | 520, 33-0525A | RELAY CABLE | MOCON P12 | I/O PCB P64 | 46.0 IN |
| 33-0535 | 530, 33-0535A | RELAY CABLE | MOCON P13 | I/O PCB P70 | 46.0 IN |
| 33-0545 | 540, 33-0545A | PRE I/O-S P3 | MOCON P14 | I/O PCB P61 | 38.0 IN |

**CABLE 510**

| | |
|---|---|
| PIN 1/2 | SERVO POWER ON/RTN |
| PIN 3/4 | PALLET UP/RTN |
| PIN 5/6 | SPARE A/RTN |
| PIN 7/8 | SPARE B/RTN |
| PIN 9/10 | 4TH AXIS BRAKE/RTN |
| PIN 11/12 | COOLANT ON/RTN |
| PIN 13/14 | AUTO POWER OFF/RTN |
| PIN 15/16 | SPINDLE COOLING (VF-0) |
| | SPINDLE LUBE |
| | SPINDLE FAN |
| | GEAR BOX OIL PUMP |
| | WAY LUBE PUMP/RTN |

**CABLE 520**

| | |
|---|---|
| PIN 1/2 | TOOL SHUTTLE IN/RTN |
| PIN 3/4 | TOOL SHUTTLE OUT/RTN |
| PIN 5/6 | TOOL TURRET CW/RTN |
| PIN 7/8 | TOOL TURRET CCW/RTN |
| PIN 9/10 | HIGH GEAR SHIFT/RTN |
| PIN 11/12 | LOW GEAR SHIFT/RTN |
| PIN 13/14 | TOOL UNCLAMP/RTN |
| PIN 15/16 | SPINDLE LOCK/RTN |

**CABLE 530**

| | |
|---|---|
| PIN 1/2 | SPIGOT FORWARD/RTN |
| PIN 3/4 | SPIGOT REVERSE/RTN |
| PIN 5/6 | SPARE A/RTN |
| PIN 7/8 | SPARE B/RTN |
| PIN 9/10 | PRECHARGE/RTN |
| PIN 11/12 | SPARE C (HTC SHUTTLE)/RTN |
| PIN 13/14 | 5TH AXIS BRAKE/RTN |
| PIN 15/16 | DOOR LOCK (EUROPE)/RTN |

## Cable 540/540A/850 I/O PCB to MCD Controls (33-1515G)

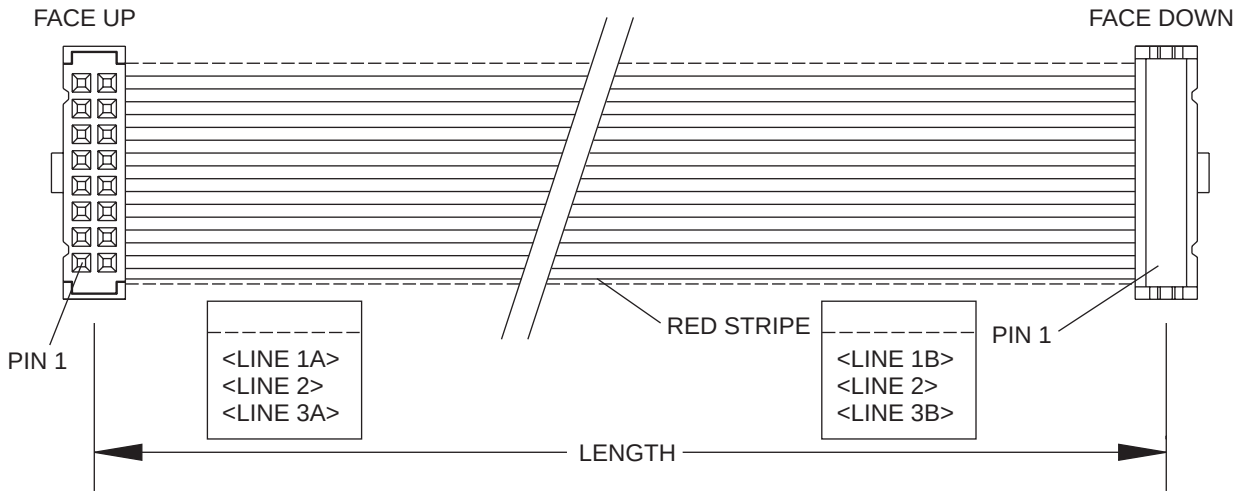


| <LINE 1A> | <LINE 1B> | <LINE 2> | <LINE 3A> | <LINE 3B> | LENGTH |
|---|---|---|---|---|---|
| 540 33-1515A | 540A 33-1515A | MCD CONTROLS | MCD PCB P1 | I/O PCB P62 | 2.00 FT |
| 540A 33-1516A | 540A 33-1516A | SMTC DRIVER | SMTC DRVR P1 | I/O PCB P62 | 1.75 FT |
| 850 33-0854A | 850 33-0854A | CSM SERIAL KBD | SKBIF P1 | PROCESSOR J4 | 2.50 FT |
| 540 33-1517A | 540A 33-1517A | MCD CONTROLS | MCD PCB P1 | I/O PCB P17 | 3.20 FT |

## Cable 550, Input I/O to MOCON - No Shield (33-0552)

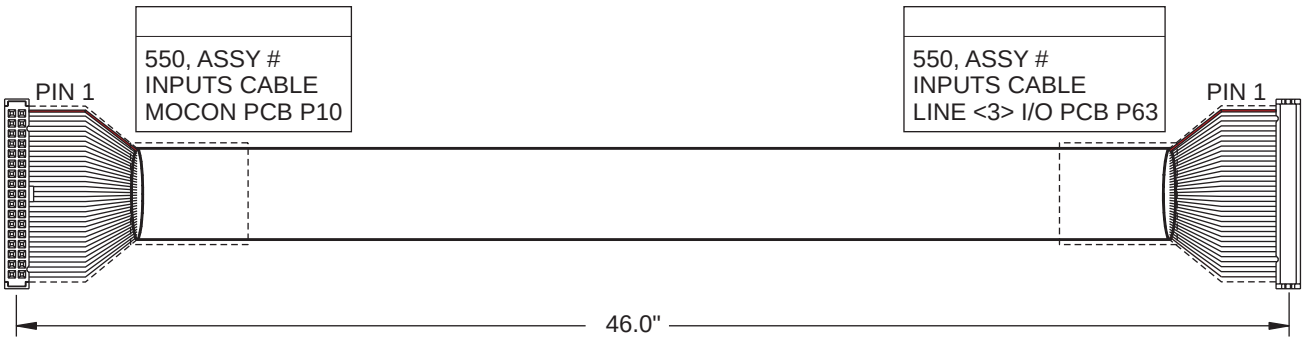


| INPUT # | SIGNAL |
|---|---|
| 00 | SHUTTLE IN (SMTC PKT DOWN) |
| 01 | SHUTTLE OUT (SMTC PKT UP) |
| 02 | TOOL #1 MARKER (SMTC TOOL #1) |
| 03 | LOW TSC COOLANT (LASER LOW ASSIST GAS PRESSURE) |
| 04 | GENEVA MARK (SMTC TC MARK) |
| 05 | IN HIGH GEAR |
| 06 | IN LOW GEAR |
| 07 | EMERGENCY STOP |
| 08 | DOOR OPEN |
| 09 | M CODE FINISH (GR PLASMA CONFIRM) |
| 10 | LOW VOLTAGE |
| 11 | LOW AIR PRESSURE (LASER LOW PURGE AIR PRESSURE) |
| 12 | LOW WAY LUBE OIL |
| 13 | OVERHEAT SERVO REGEN |
| 14 | DRAW BAR OPEN |
| 15 | DRAW BAR CLOSED |
| 16 | SPARE (3RD DB POS SW) |
| 17 | SPINDLE DRIVE FAULT |
| 18 | SPINDLE STOPPED |
| 19 | SPINDLE AT SPEED |
| 20 | LOW GEARBOX/SPINDLE OIL (VB LOW CHILL PRESSURE) |
| 21 | SPARE 1 (VB CLAMSHELL DOOR OPEN) |
| 22 | SPARE 2A (APC PIN CLR MD OPEN) |
| 23 | SPARE 2B |
| 24 | REMOTE TOOL UNCLAMP |
| 25 | LO PHASE |
| 26 | SPARE 3A (APC PAL #2 HOME, OLD MD PAL UP, NEW MD PAL UNCLAMP) |
| 27 | SPARE 3B (APC PAL #1 HOME, OLD MD PAL DOWN, EC-1600 CLAMP) |
| 28 | GROUND FAULT |
| 29 | SKIP |
| 30 | SPIGOT |
| 31 | CHIP CONVEYOR OVERCURRENT SENSE CIRUIT |
| 32 | SPARE 4A (APC #2 PIN CLR #1) |
| 33 | SPARE 4B (APC #2 PIN CLR #2) |
| 34 | SPARE 4C (APC #2 PAL #2 HOME) |
| 35 | SPARE 4D (APC #2 PAL #1 HOME) |
| 36 | SPARE 6A (AUTODOOR) |
| 37 | SPARE 6B |
| 38 | SPARE 7A (APC #2 CE DOOR OPEN) |
| 39 | SPARE 7B |
| 40 | SPARE 8A (APC #2 DOOR CLOSED) |
| 41 | SPARE 8B (APC #2 DOOR OPEN) |
| 42 | SPARE 9A (SMTC MTR STP) |
| 43 | SPARE 9B (SMTC ORIGIN) |
| 44 | SPARE 9C (SMTC CL/UNCL) |
| 45 | SPARE 9D (SMTC CL/UNCL) |
| 46 | SPARE 10A (APC DOOR CLOSED) |
| 47 | SPARE 10B (APC DOOR OPEN) |
| 48 | SPARE 10C (APC PAL CLAMPED) |
| 49 | SPARE 10D (APC PAL IN POSITION) |

## Cable 610 (620, 630), Axis Current Command (33-0610E)

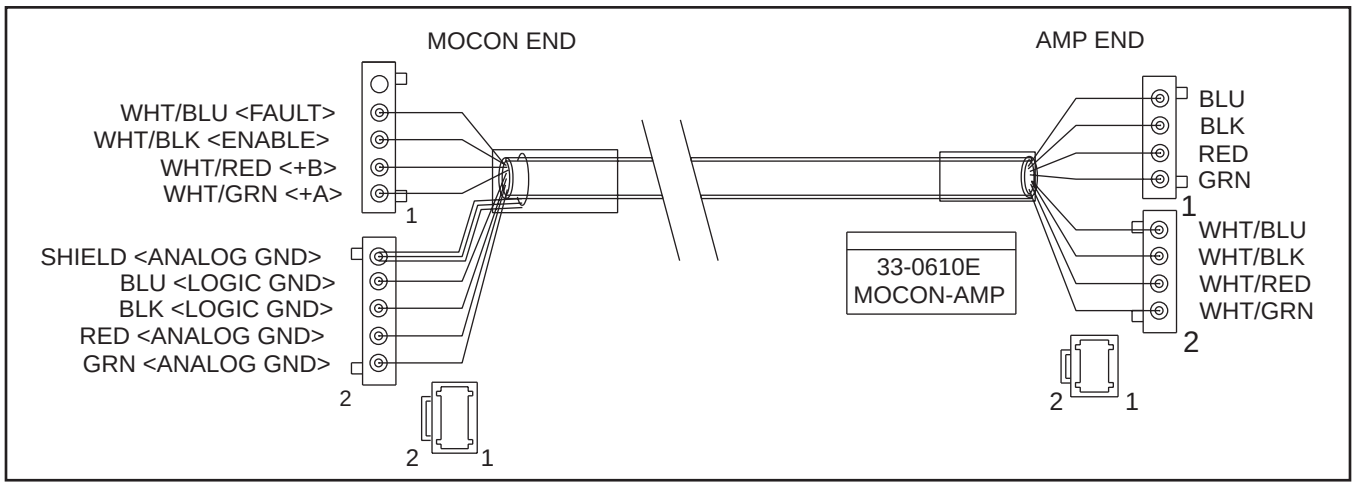


## Cable 640C, Vector Drive Current Command (33-4048B)

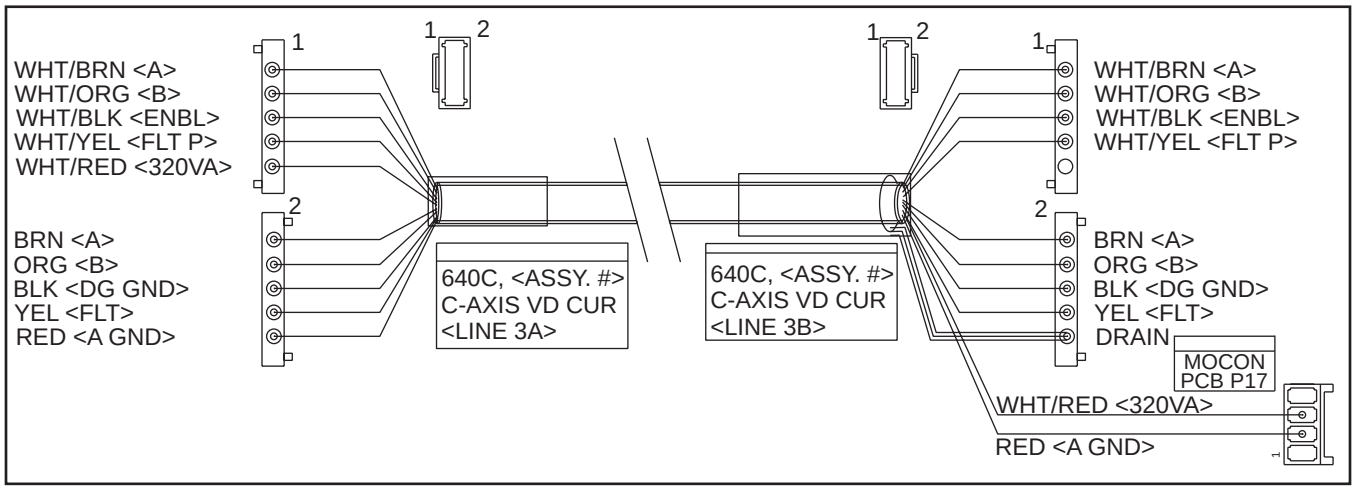

## Cable 700A, Feed Hold/Cycle Start (33-0700A)

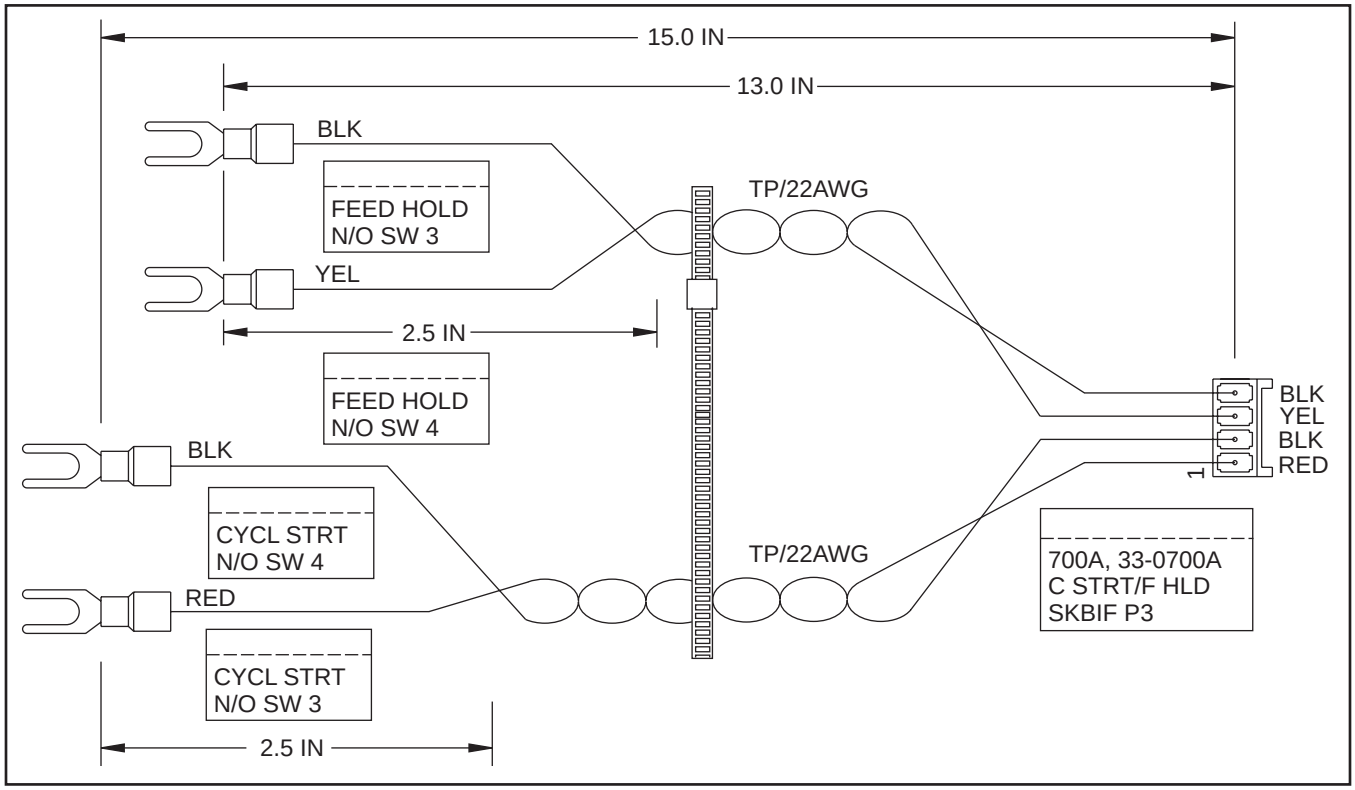


## Cable 710, Forward/Reverse Relay - OM-1 (33-8154)

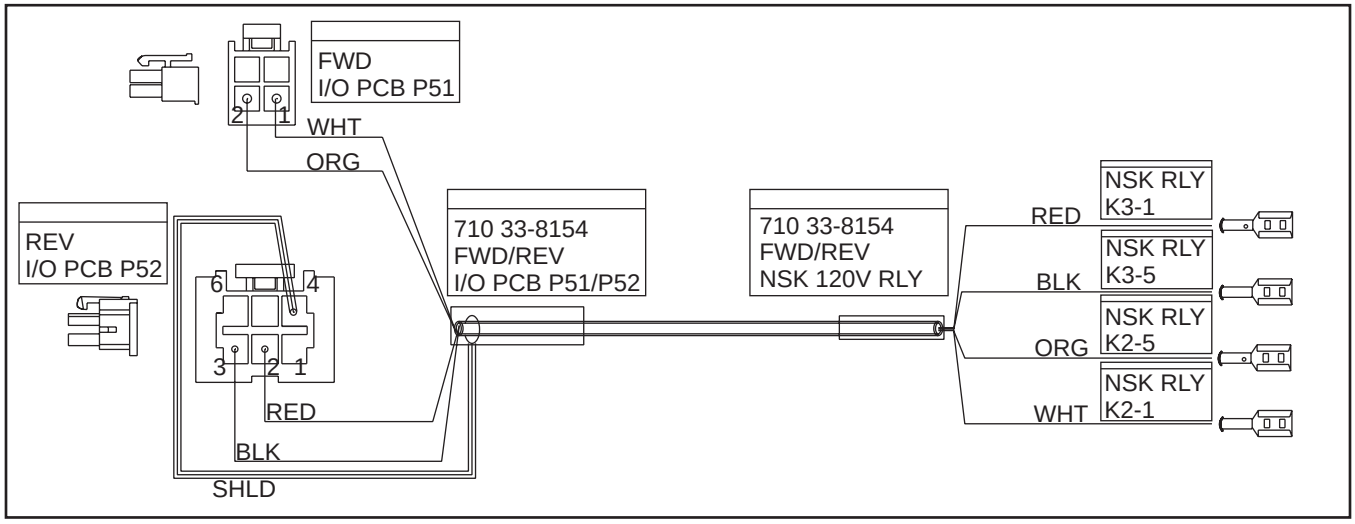

## Cable 720, Spindle Load Meter (33-0733)

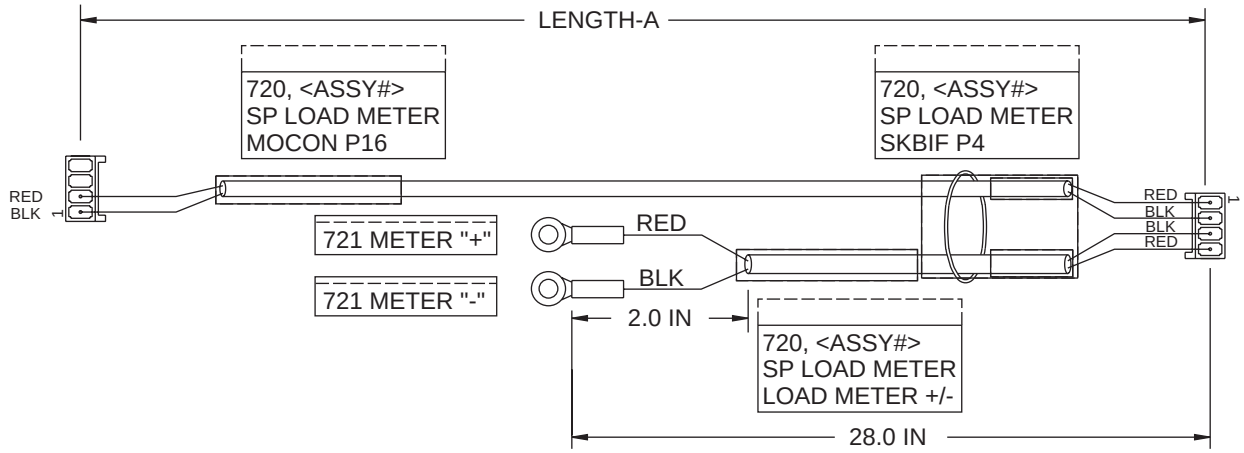


| ASSY. # | MACHINE | LENGTH-A | TOTAL LENGTH |
|---|---|---|---|
| 33-0733 | VF 0-2, VB-1 | 12.00 FT | 14.33 FT |
| 33-4733 | VF 3-5 | 15.00 FT | 17.33 FT |
| 33-2733 | TM-1/2 | 8.50 FT | 10.83 FT |
| 33-5733 | ML | 8.00 FT | 10.33 FT |
| 33-6733 | VF 6-11, SL-40 | 19.00 FT | 21.33 FT |
| 33-6737 | SL-40LB | 22.50 FT | 24.85 FT |
| 33-7733 | SL-20/30 | 14.00 FT | 16.33 FT |
| 33-8733A | HS (ALL) | 6.00 FT | 8.33 FT |

## Cable 720/730B, Spindle Drive Load (19-24016)

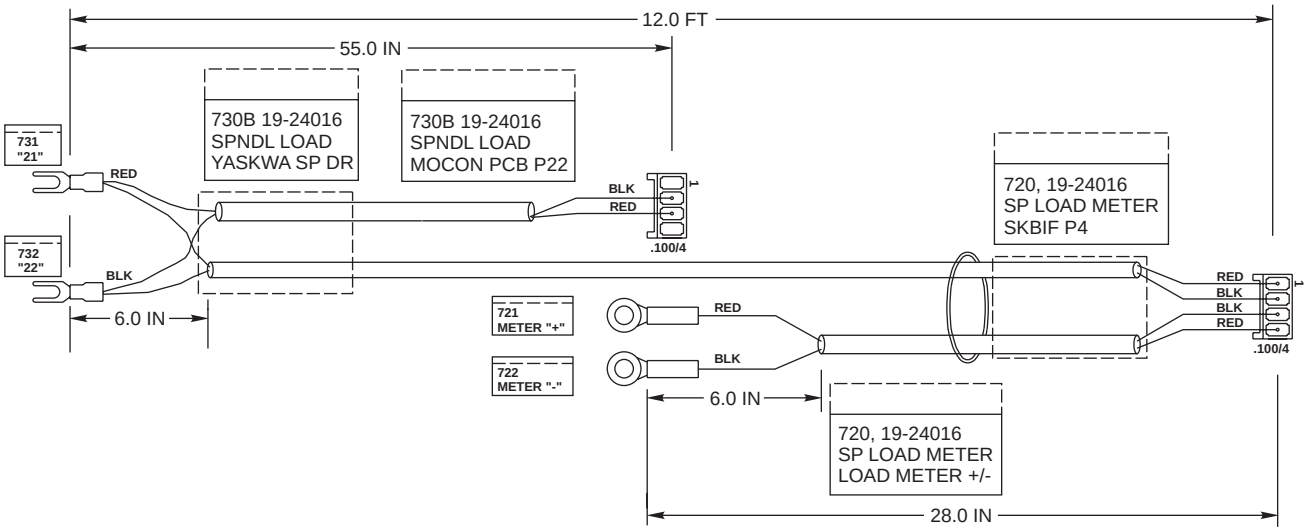

## Cable 740, On/Off F P (33-2741C)

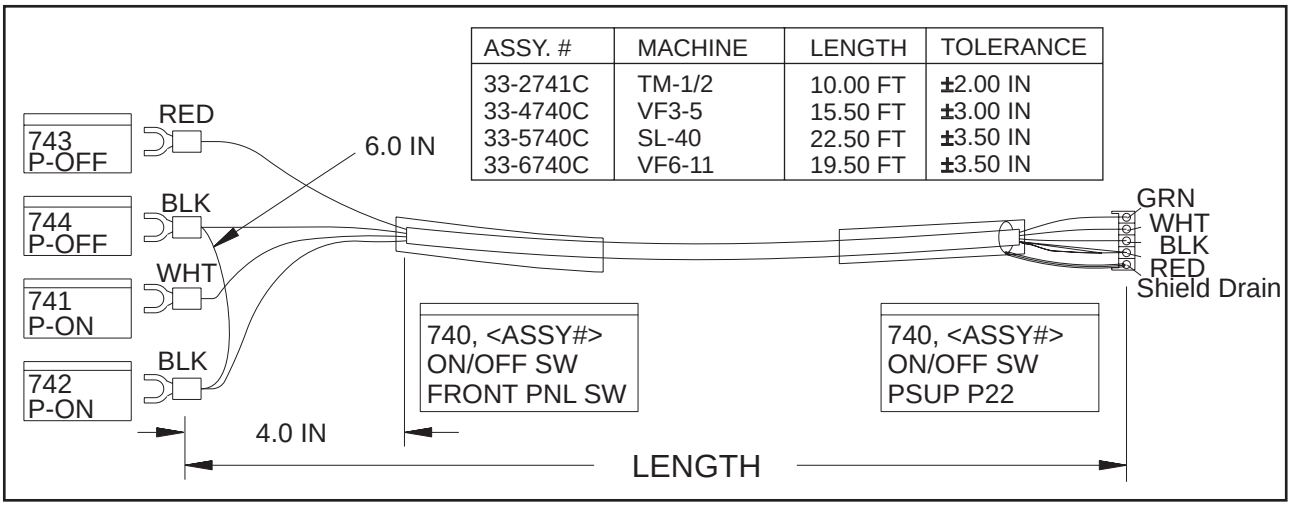


| ASSY. # | MACHINE | LENGTH | TOLERANCE |
|---|---|---|---|
| 33-2741C | TM-1/2 | 10.00 FT | ±2.00 IN |
| 33-4740C | VF3-5 | 15.50 FT | ±3.00 IN |
| 33-5740C | SL-40 | 22.50 FT | ±3.50 IN |
| 33-6740C | VF6-11 | 19.50 FT | ±3.50 IN |

## Cable 750, Remote Jog Handle Data - 11 FT (33-0750C)

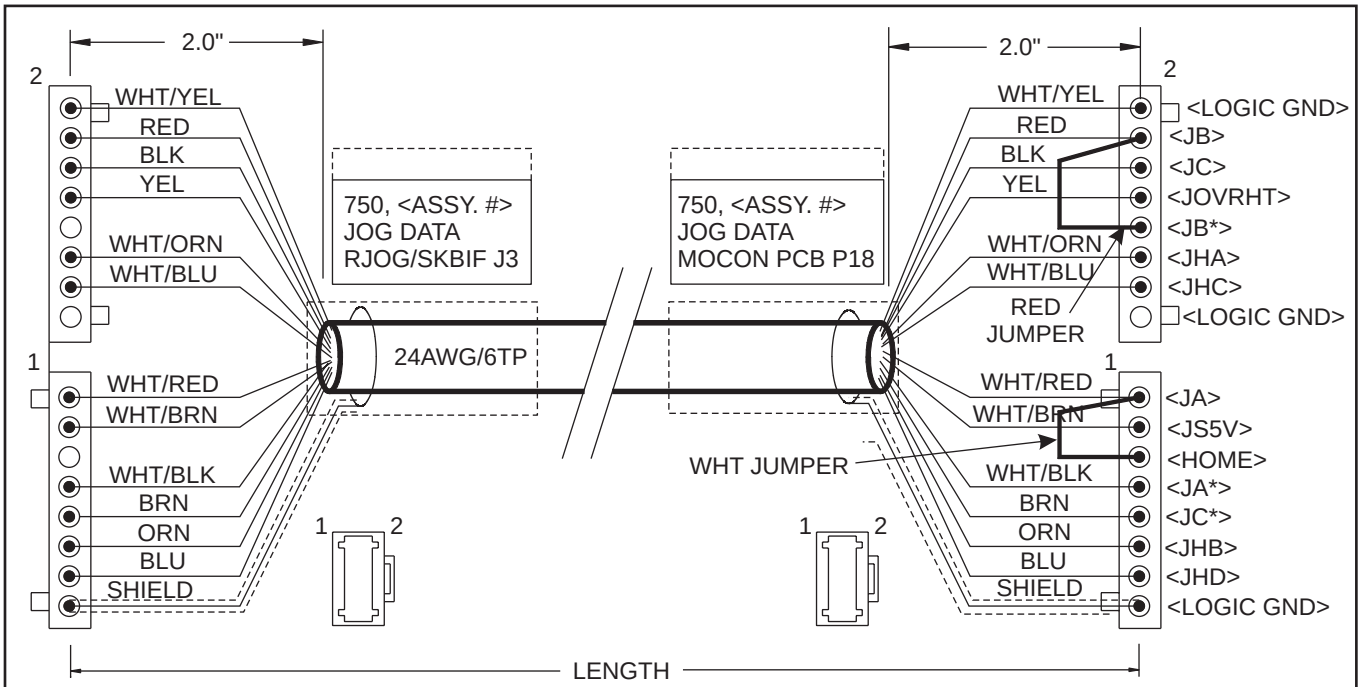


| ASSY. # | MACHINE | LENGTH | TOLERANCE |
|---|---|---|---|
| 33-0750C | TM-1/2, EC-300/400/1600, MDC-500, ML | 11.00 FT | 3.0 IN |
| 33-4750 | HS-1/2, MDC-1 | 8.00 FT | 2.0 IN |
| 33-5750C | VF3-5, VF3/4SS, SL10/20/30, TL1/2/3/15/25 VF6-11, VR8/9/11B | 18.00 FT | 3.5 IN |
| 33-5757 | SL-40 | 22.50 FT | 1.5% of Length |
| 33-6750B | SL-40LB | 24.50 FT | 1.5% of Length |
| 33-7750C | VF 0-2, MM, GRs, VF-2SS, HS-3, VB-1/3 | 13.50 FT | 3.0 IN |

## Cable 750C, Jog Handle Assembly (33-0750D)

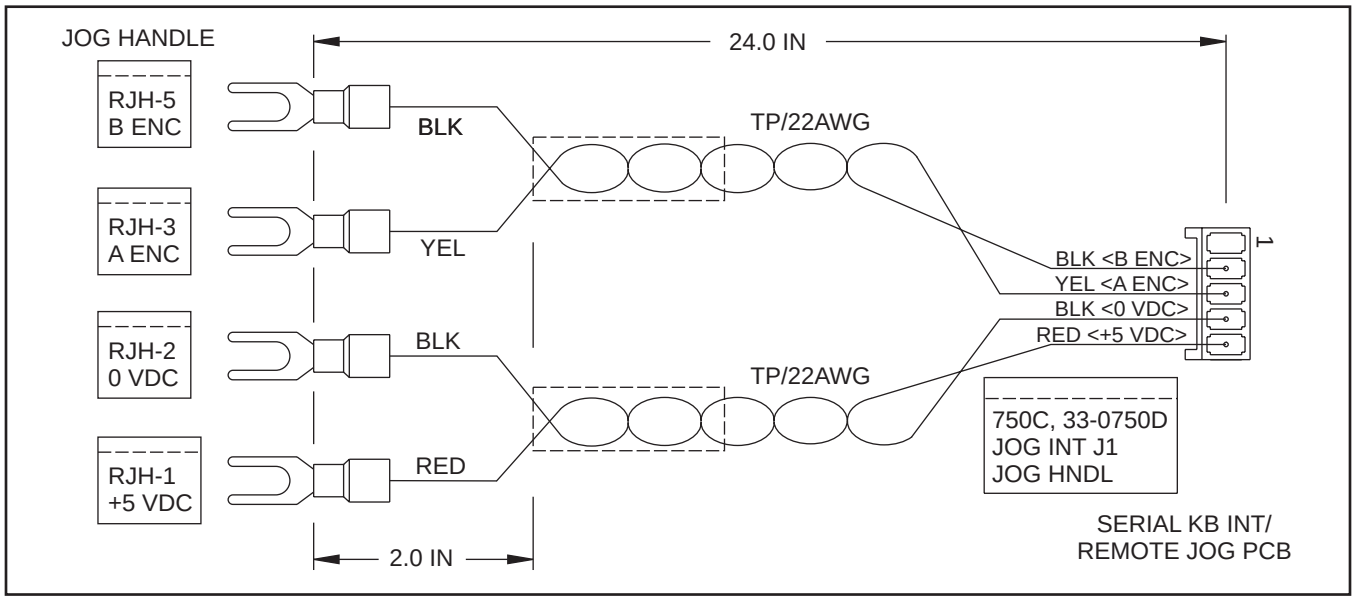


## Cable 770, Emergency Stop Input (33-0770)

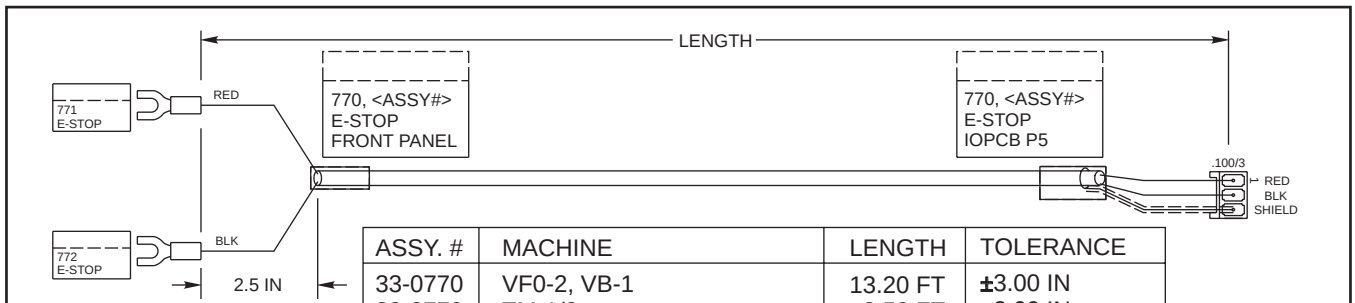


| ASSY. # | MACHINE | LENGTH | TOLERANCE |
|---|---|---|---|
| 33-0770 | VF0-2, VB-1 | 13.20 FT | ±3.00 IN |
| 33-2770 | TM-1/2 | 8.50 FT | ±2.00 IN |
| 33-4770 | VF3-5 | 17.00 FT | ±3.00 IN |
| 33-5770 | SL-40 | 22.00 FT | ±3.50 IN |
| 33-6770 | VF6-11 | 19.00 FT | ±3.50 IN |
| 33-7770 | SL-20/30 | 16.00 FT | ±3.00 IN |
| 33-8770 | HS-1/2, MDC-1, EC-300/400 | 8.0 FT | ±2.00 IN |
| 33-8772 | VS-3 | 35.50 FT | ±1.5% of Length |

## Cable 770, MOCON 2 Auxiliary E-Stop (33-0773)

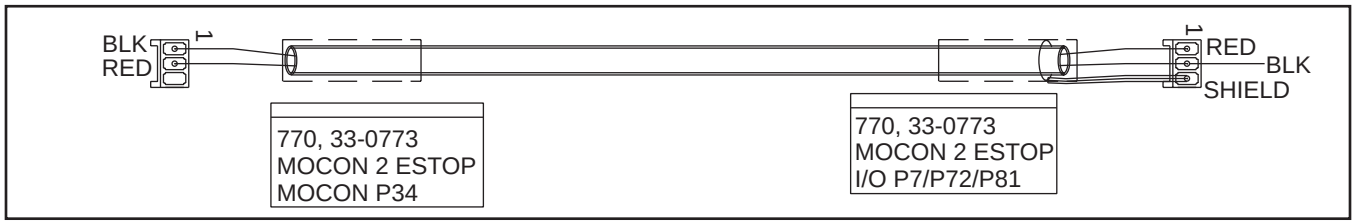

## Cable 780, Spindle Overvoltage (33-4047)

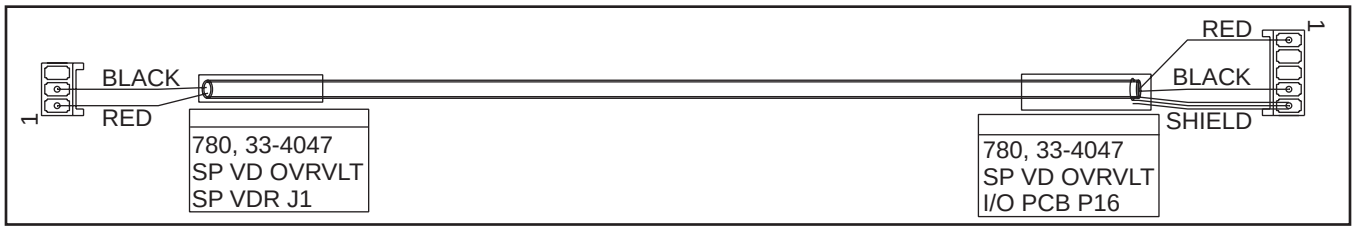


## Cable 790, Tool Presetter Home Switch "I/O S" SL-20/30 (33-0557A)

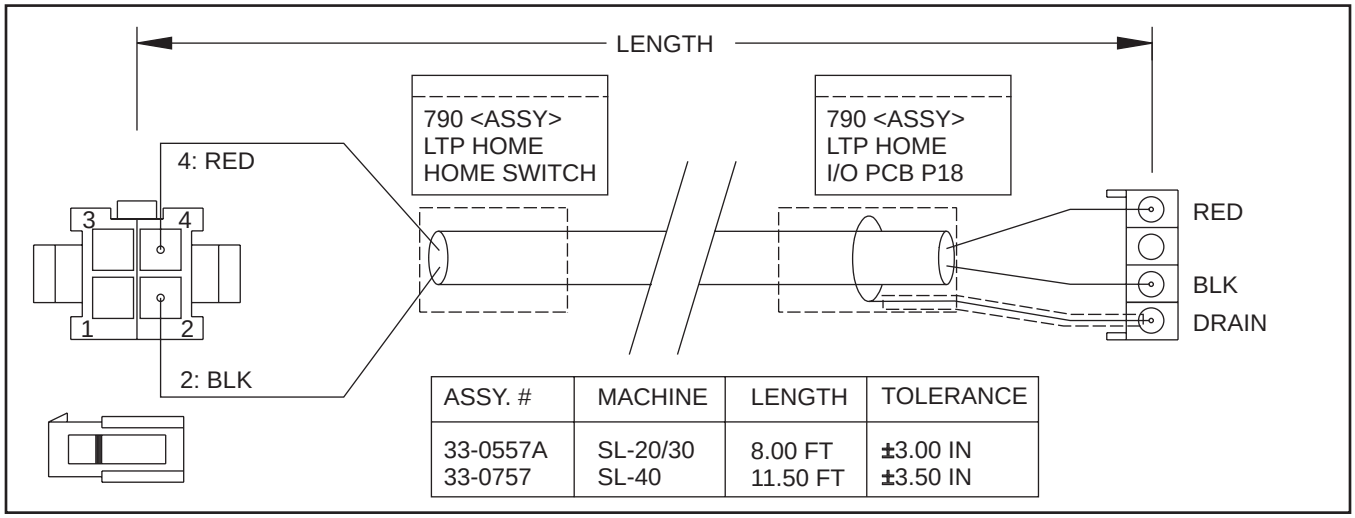


| ASSY. # | MACHINE | LENGTH | TOLERANCE |
|---|---|---|---|
| 33-0557A | SL-20/30 | 8.00 FT | ±3.00 IN |
| 33-0757 | SL-40 | 11.50 FT | ±3.50 IN |

## Cable 820, Tool Turret Status - 17 FT (32-0823)

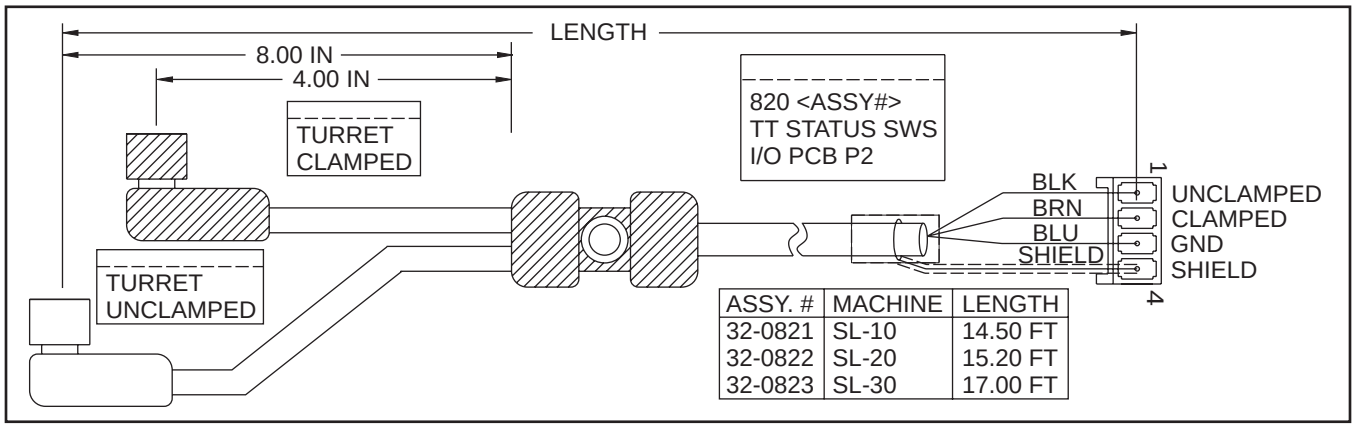


| ASSY. # | MACHINE | LENGTH |
|---|---|---|
| 32-0821 | SL-10 | 14.50 FT |
| 32-0822 | SL-20 | 15.20 FT |
| 32-0823 | SL-30 | 17.00 FT |

## Cable 820, 8-Station Tool Turret Status (33-4820A)

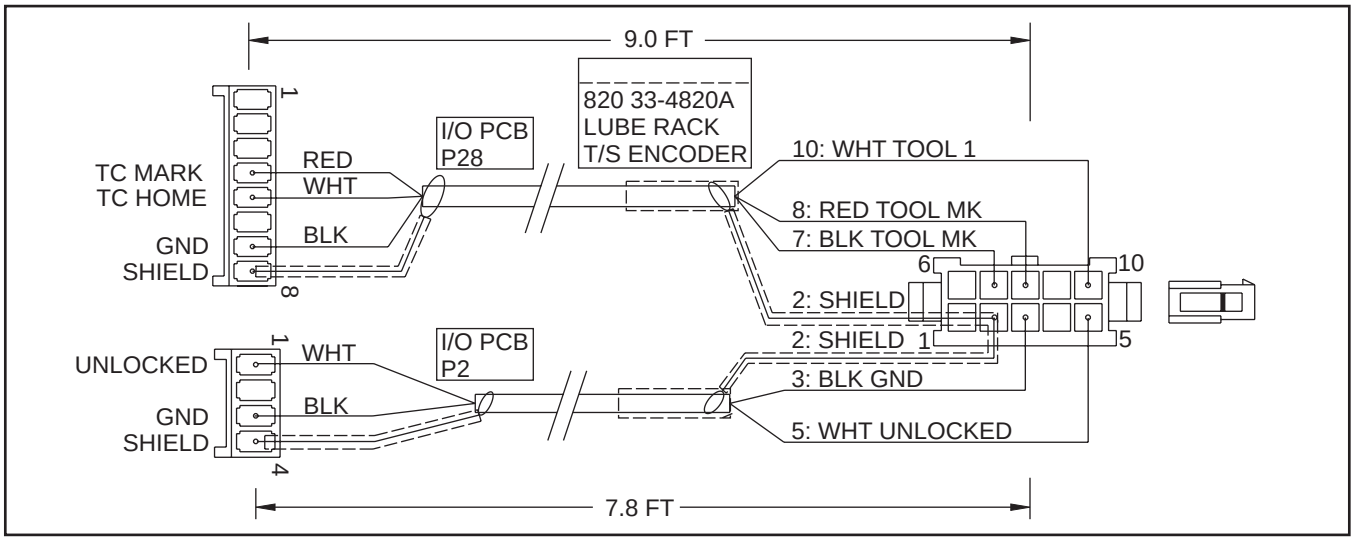


## Cable 820, C-Axis Enable/Disable SL-20/30 (33-6820A)

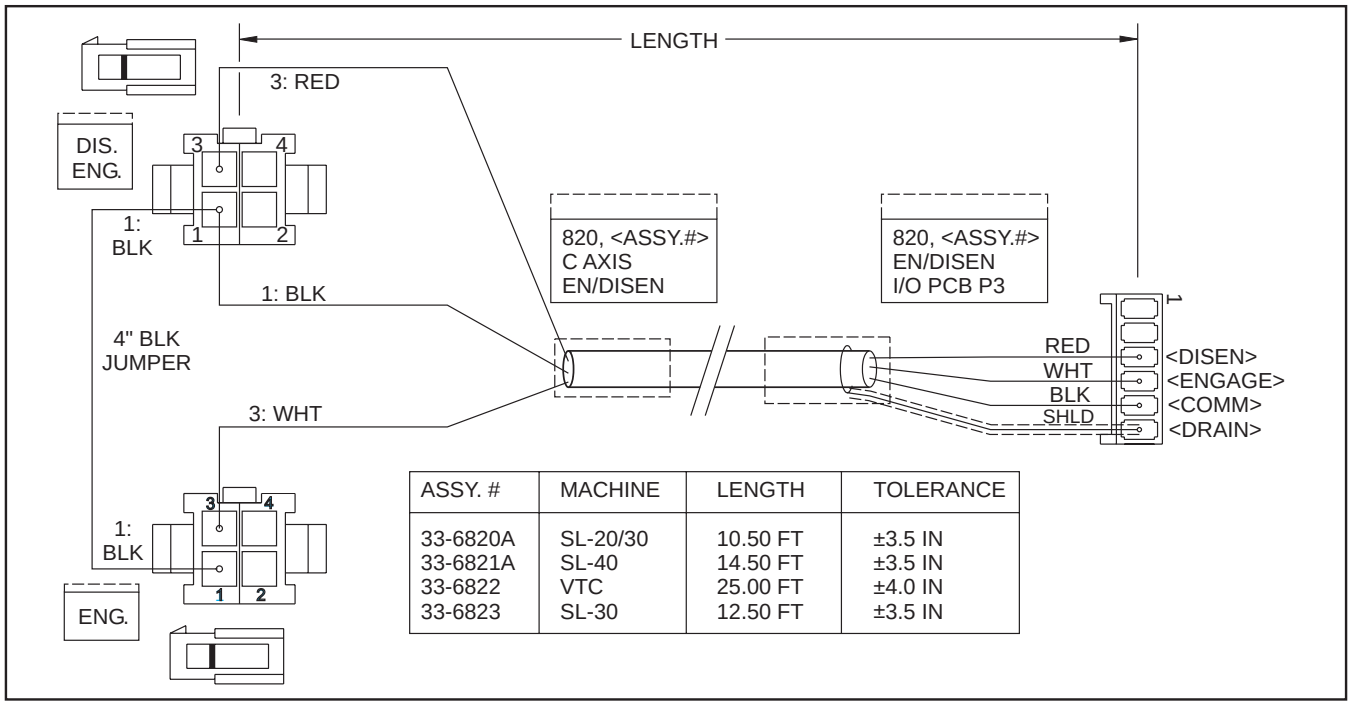


| ASSY. # | MACHINE | LENGTH | TOLERANCE |
|---|---|---|---|
| 33-6820A | SL-20/30 | 10.50 FT | ±3.5 IN |
| 33-6821A | SL-40 | 14.50 FT | ±3.5 IN |
| 33-6822 | VTC | 25.00 FT | ±4.0 IN |
| 33-6823 | SL-30 | 12.50 FT | ±3.5 IN |

## Cable 850, SKBIF (33-0700B)

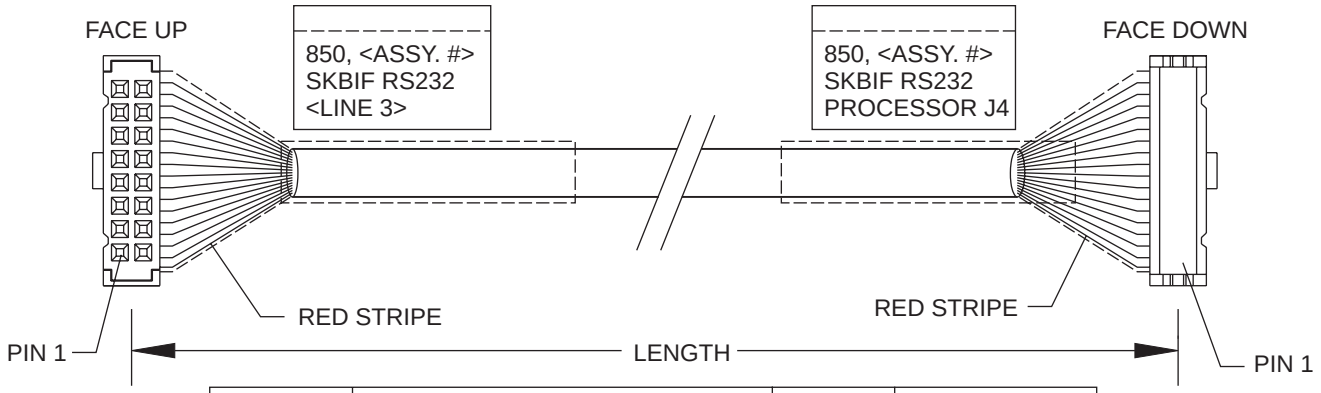


| ASSY. # | MACHINE | LENGTH | <LINE 3> |
|---|---|---|---|
| 33-0700B | VF0-2, SL-20/30, VB-1 | 12.00 FT | SKBIF P1 |
| 33-6700A | VF6-11, VF5-11/50T | 19.00 FT | SKBIF P1 |
| 33-6702 | VS-3 | 13.50 FT | BASE CARRIER |
| 33-6705 | TL-4 | 20.00 FT | SKBIF P1 |
| 33-7700A | VF3-5, SL-40 | 15.00 FT | SKBIF P1 |
| 33-8700B | EC-300/MDC-500/EC-400/EC-1600 | 8.50 FT | SKBIF P1 |

## Cable 850/850A RS-232 16-pin Ribbon Cable (33-0850)

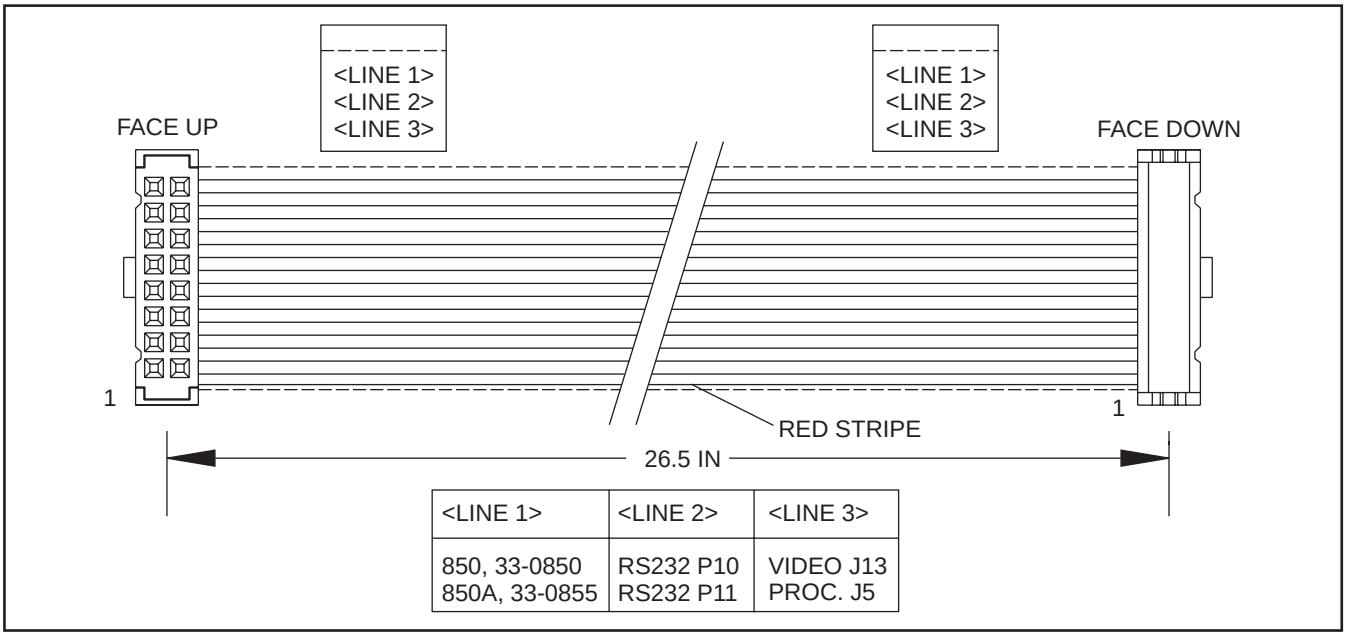


| <LINE 1> | <LINE 2> | <LINE 3> |
|---|---|---|
| 850, 33-0850<br>850A, 33-0855 | RS232 P10<br>RS232 P11 | VIDEO J13<br>PROC. J5 |

## Cable 860, +5V/+12V/-12V/GND to MOCON 1 (33-0865)

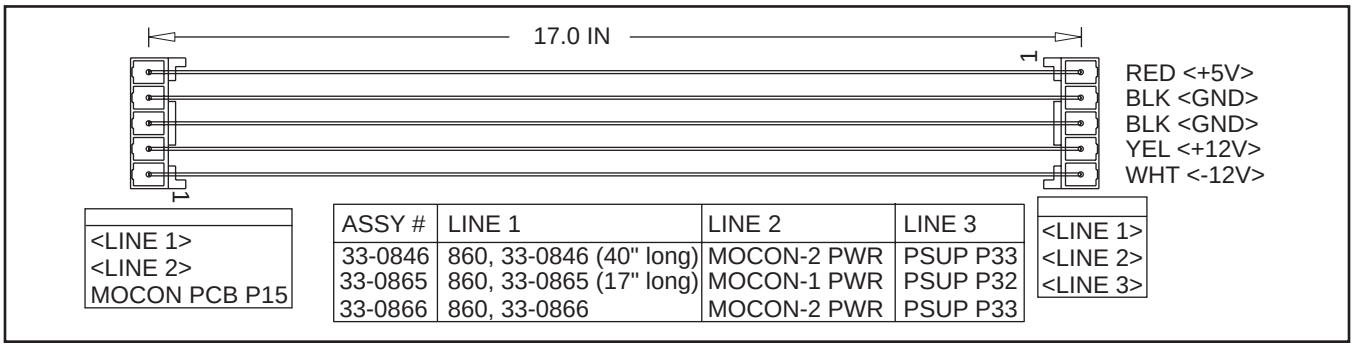


| ASSY # | LINE 1 | LINE 2 | LINE 3 |
|---|---|---|---|
| 33-0846 | 860, 33-0846 (40" long) | MOCON-2 PWR | PSUP P33 |
| 33-0865 | 860, 33-0865 (17" long) | MOCON-1 PWR | PSUP P32 |
| 33-0866 | 860, 33-0866 | MOCON-2 PWR | PSUP P33 |

## Cable 860, 12V DC - MCD Relay PCB (33-8110)

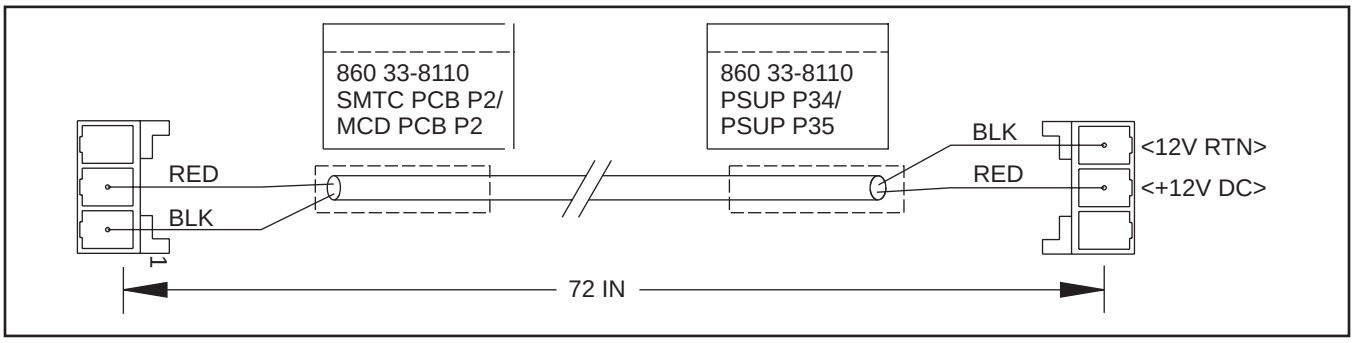


## Cable 860A, +5V/+12V/GND to I/O PCB (33-0861B)

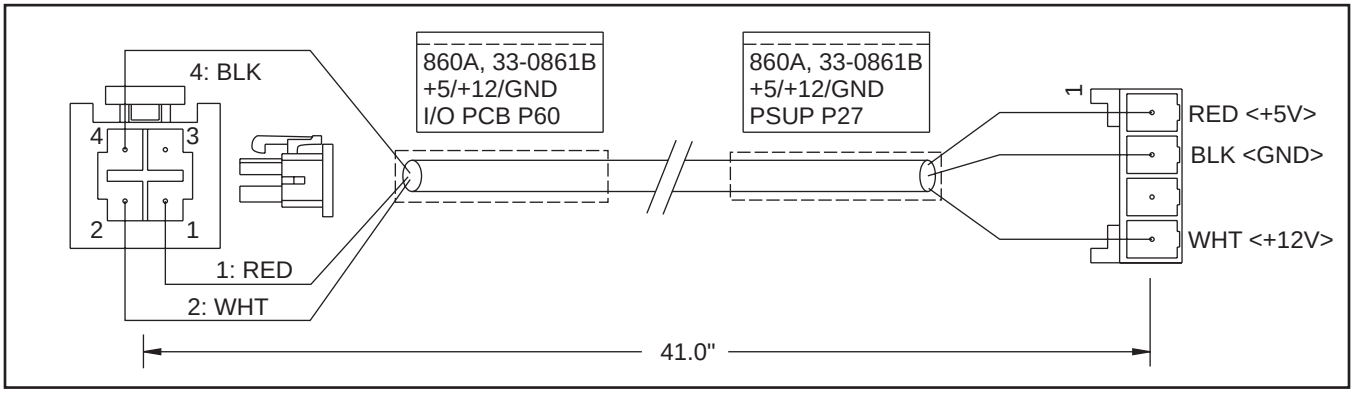

## Cable 860A, +5V/+12V/GND to I/O PCB (33-0982)

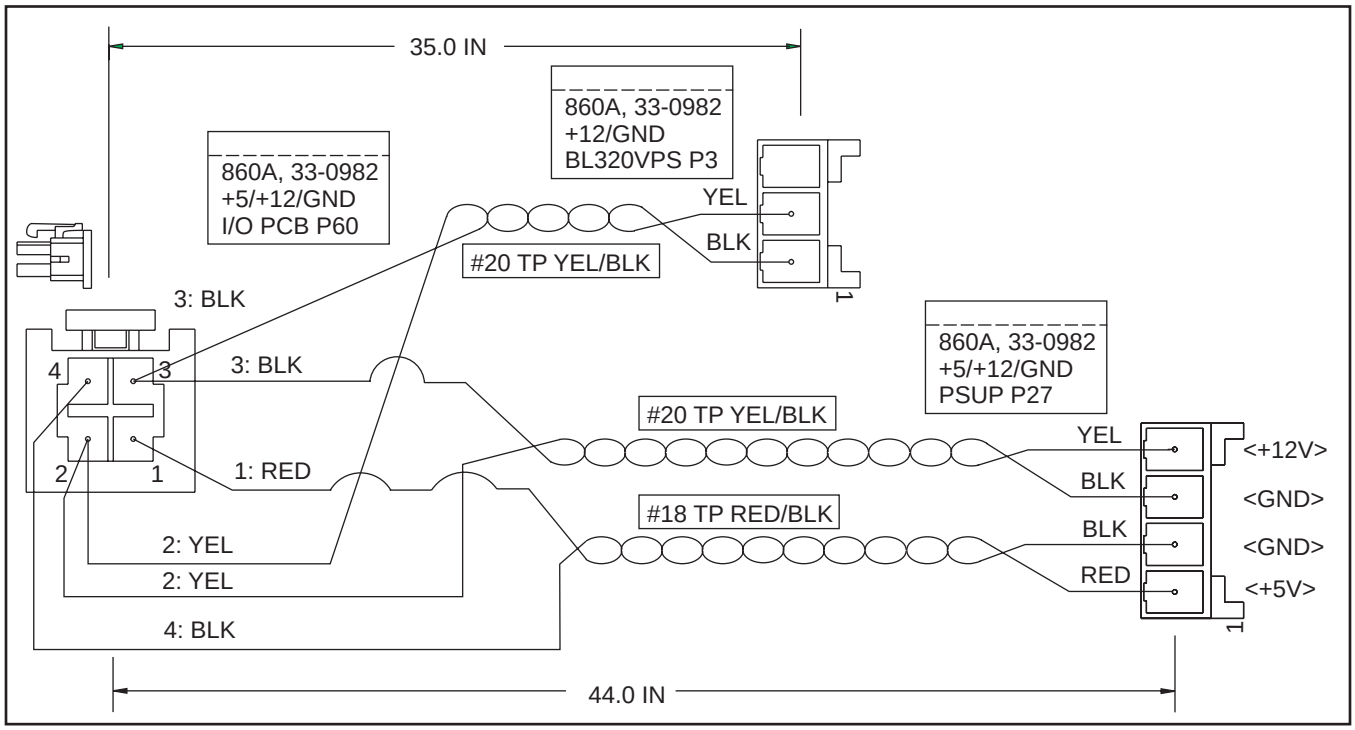


## Cable 880A, Spindle Head Solenoid (33-0881)

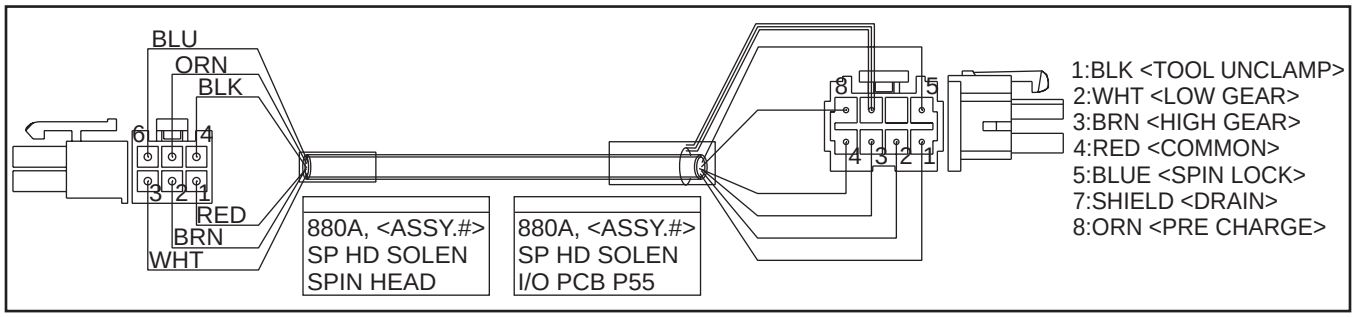


## Cable 880B, 120V AC to Gear Relay (33-0370D)

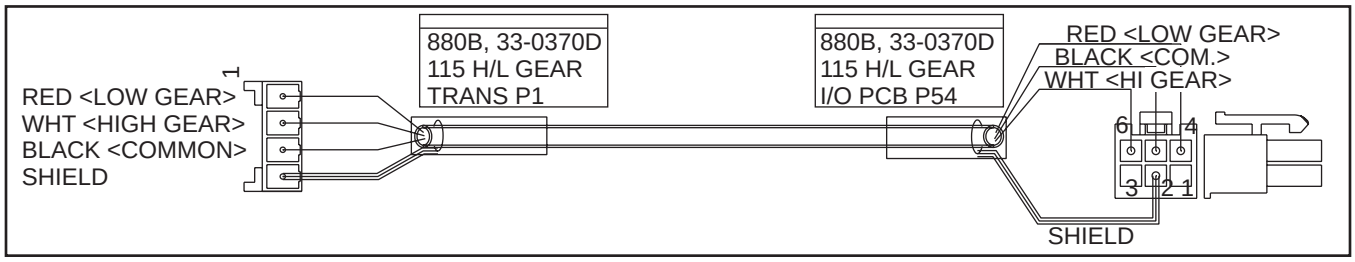

## Cable 880C, Delta/Wye Relay - 115V (33-0882A)

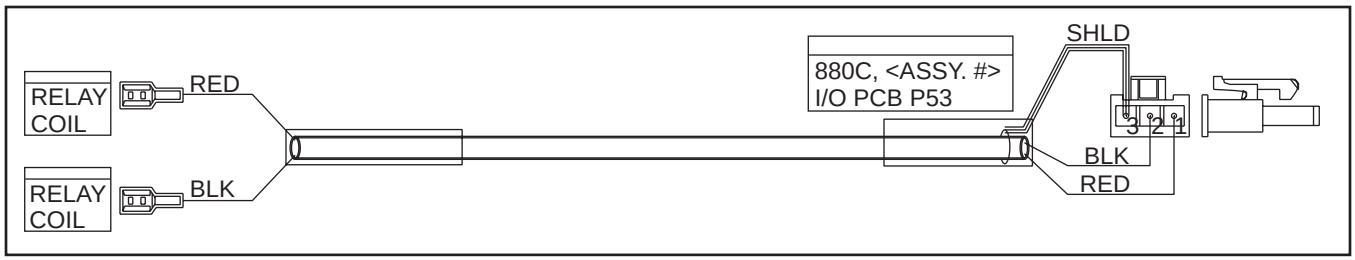


## Cable 880D External Delta/Wye Relay - 115V (33-0886C)

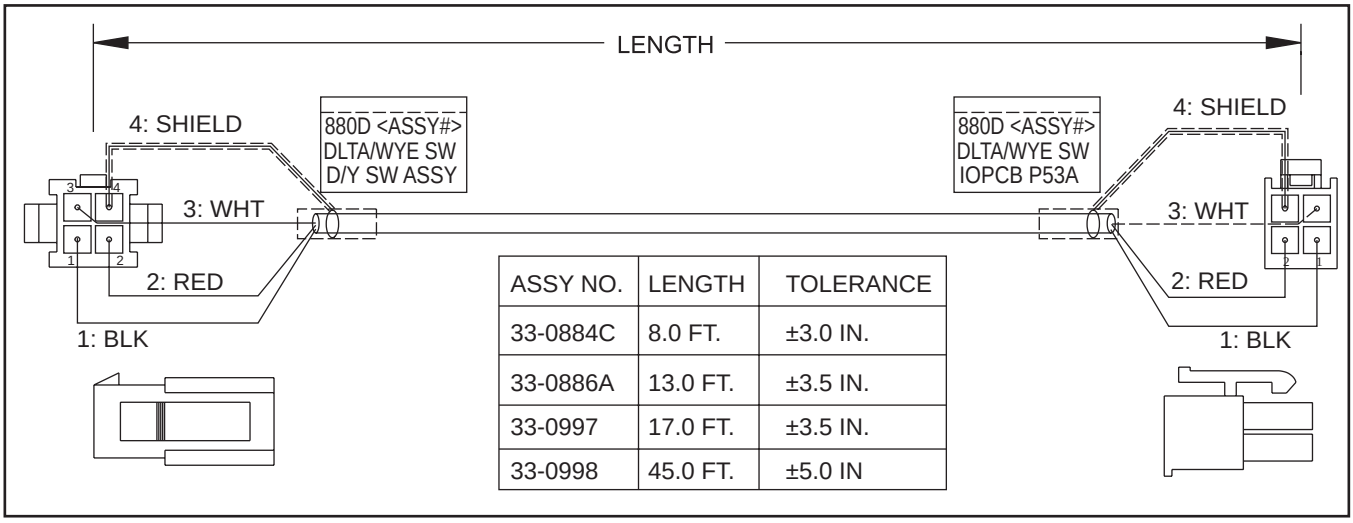


| ASSY NO. | LENGTH | TOLERANCE |
|---|---|---|
| 33-0884C | 8.0 FT. | ±3.0 IN. |
| 33-0886A | 13.0 FT. | ±3.5 IN. |
| 33-0997 | 17.0 FT. | ±3.5 IN. |
| 33-0998 | 45.0 FT. | ±5.0 IN |

## Cable 890, Spindle Status (33-0890)

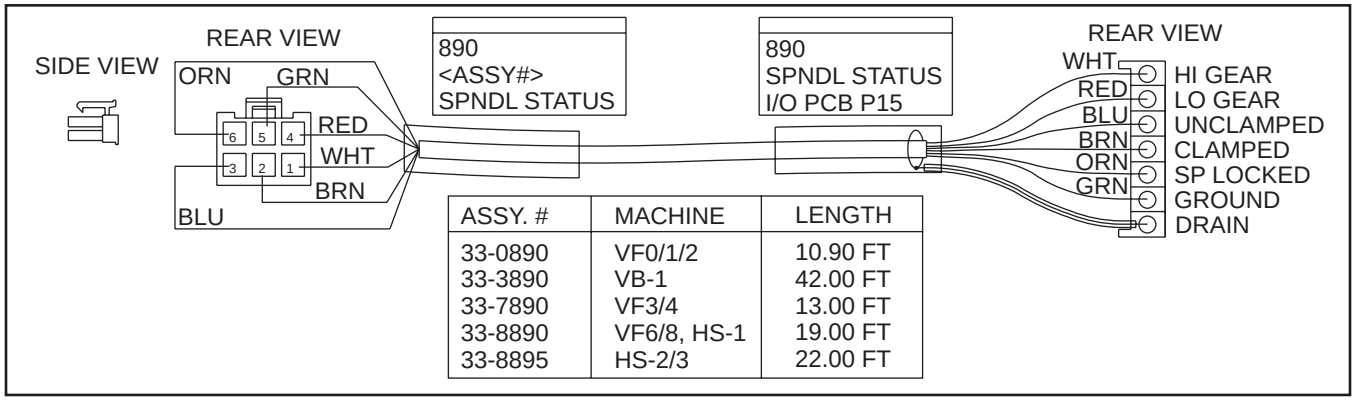


| ASSY. # | MACHINE | LENGTH |
|---|---|---|
| 33-0890 | VF0/1/2 | 10.90 FT |
| 33-3890 | VB-1 | 42.00 FT |
| 33-7890 | VF3/4 | 13.00 FT |
| 33-8890 | VF6/8, HS-1 | 19.00 FT |
| 33-8895 | HS-2/3 | 22.00 FT |

## Cable 890, Spindle Status Switch (33-0891)

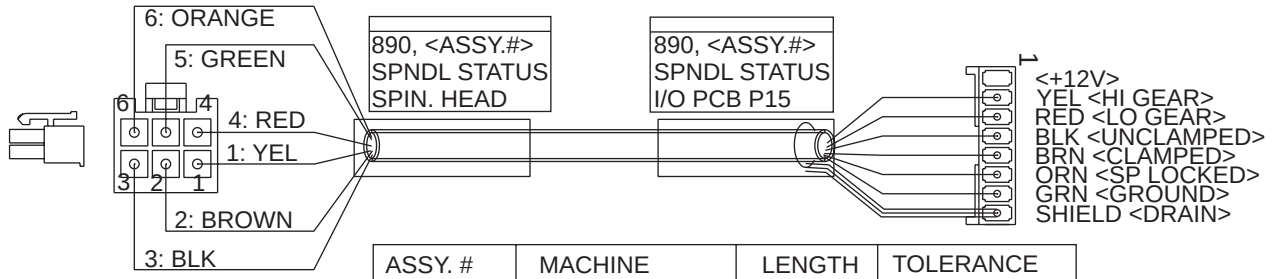


| ASSY. # | MACHINE | LENGTH | TOLERANCE |
|---|---|---|---|
| 33-0891 | VF0-2 | 10.90 FT | ±3.50 IN |
| 33-3891 | VB-1/3 | 38.50 FT | ±1.5% of Length |
| 33-6891 | HS-2/3 | 22.00 FT | ±1.5% of Length |
| 33-7891 | VF3-5 | 13.00 FT | ±3.50 IN |
| 33-7892A | GR-510/512/710 | 46.00 FT | ±1.5% of Length |
| 33-7893 | GR-712 | 48.00 FT | ±1.5% of Length |
| 33-8891 | VF6-11, HS-1 | 19.00 FT | ±3.50 IN |
| 33-8892 | VR-11B | 20.50 FT | ±1.5% of Length |
| 33-8893 | VS-3 | 28.50 FT | ±1.5% of Length |
| 33-7894 | GR-408 | 31.00 FT | ±1.5% of Length |

## Cable 900, Through the Spindle Coolant Pressure Sensor - 11.5 FT (33-0900C)

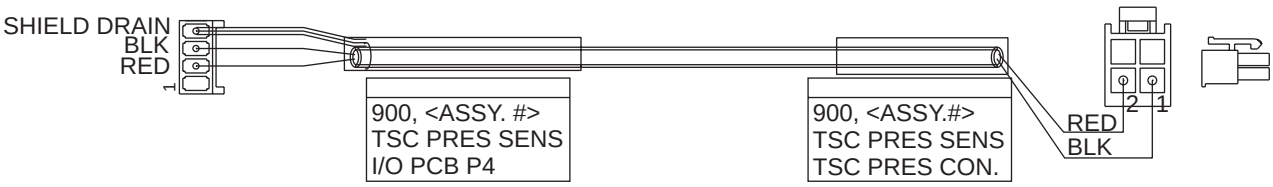


| ASSY. # | MACHINE | LENGTH | TOLERANCE |
|---|---|---|---|
| 33-0900C | VF0-3 | 11.50 FT | ±3.50 IN |
| 33-6904A | VF6, HS (ALL), VR11B | 21.50 FT | ±1.5% of Length |
| 33-8904 | VS-3 | 29.50 FT | ±1.5% of Length |
| 33-8964 | MDC-1 | 19.50 FT | ±1.5% of Length |
| 33-6907 | EC-300 | 14.00 FT | ±3.50 IN |
| 33-6912 | VB-3/X | 50.00 FT | ±1.5% of Length |

## Cable 900, TSC Low Pressure Switch (33-6908B)

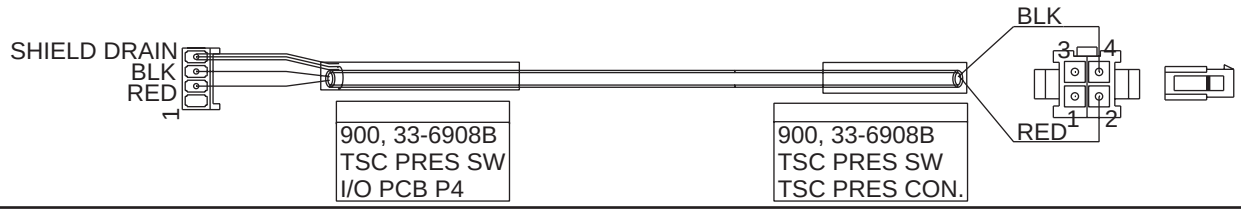

## Cable 930, 230V I/O Coolant - TSC (33-0930F)

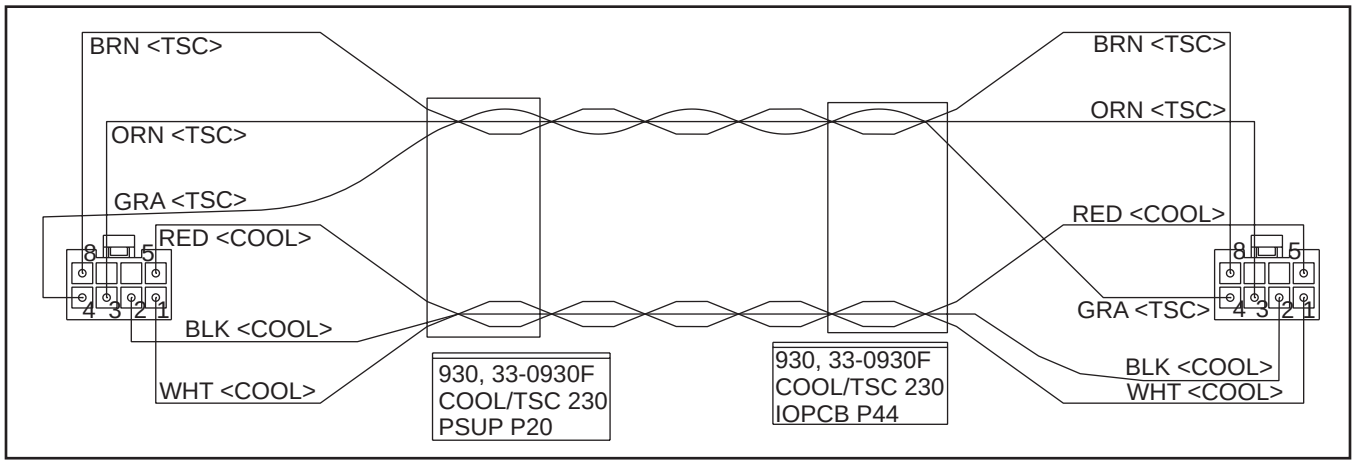


## Cable 940, Coolant Pump Receptacle (32-0942B)

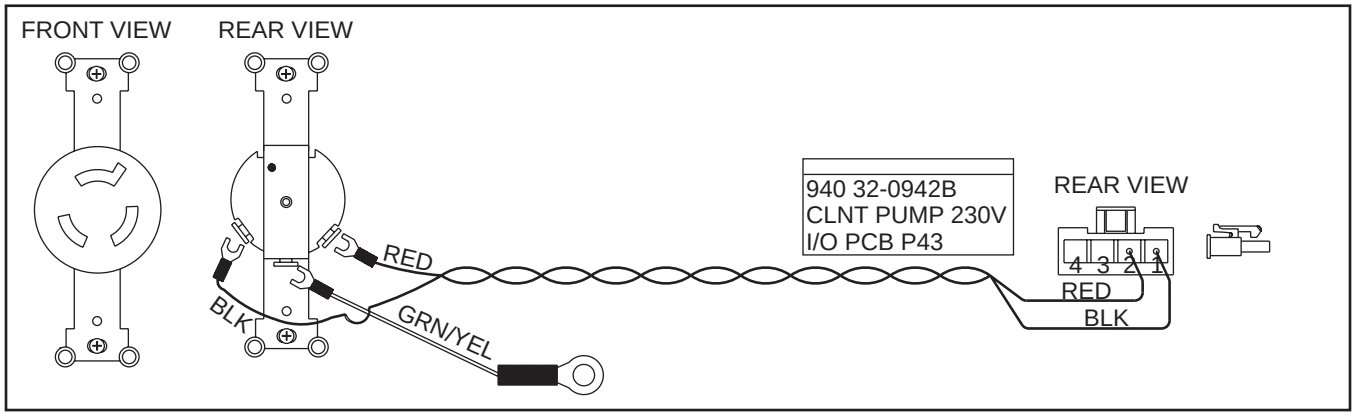


## Cable 940, Coolant Pump Receptacle - OM (32-0949)

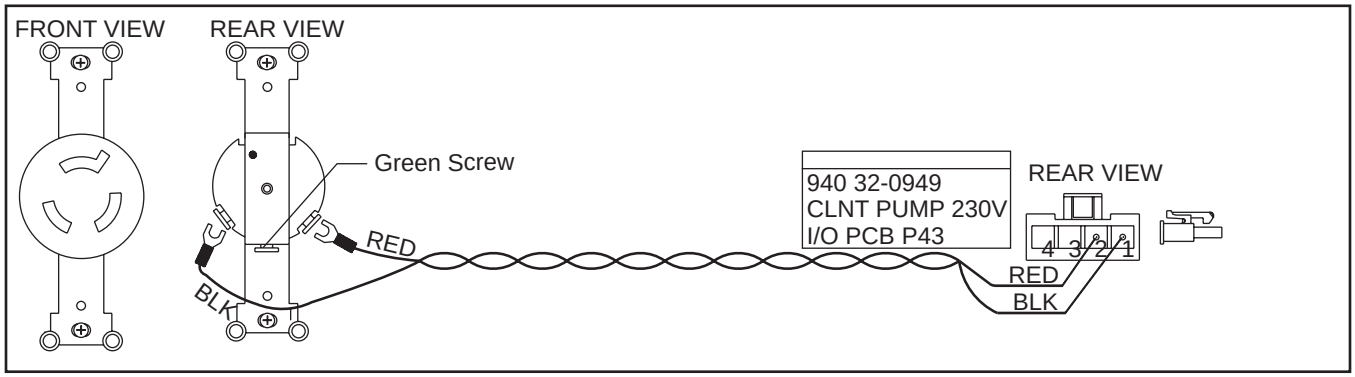

## Cable 940A, Hydraulic Pump Power (33-0340E)

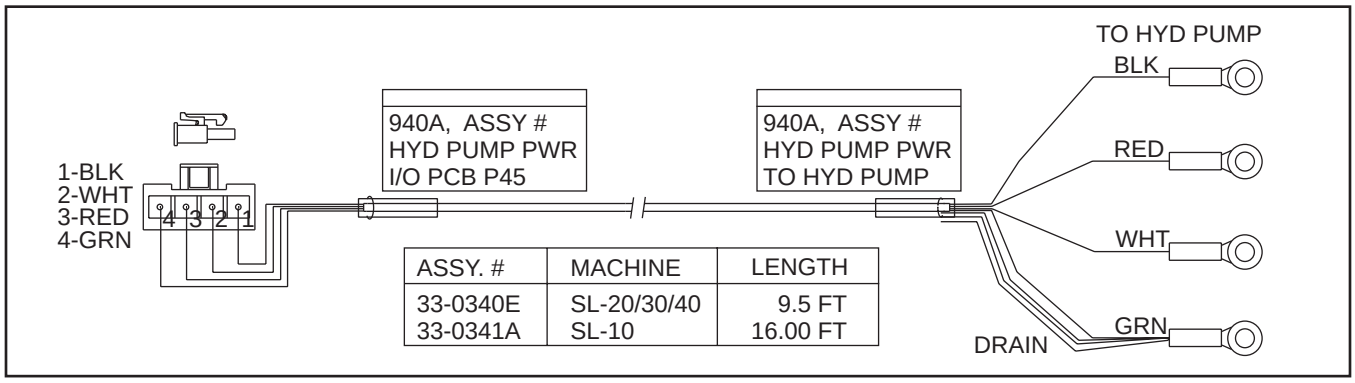


| ASSY. # | MACHINE | LENGTH |
|---|---|---|
| 33-0340E | SL-20/30/40 | 9.5 FT |
| 33-0341A | SL-10 | 16.00 FT |

## Cable 940A, TSC 1000 Ext. 23 FT (32-5126A)

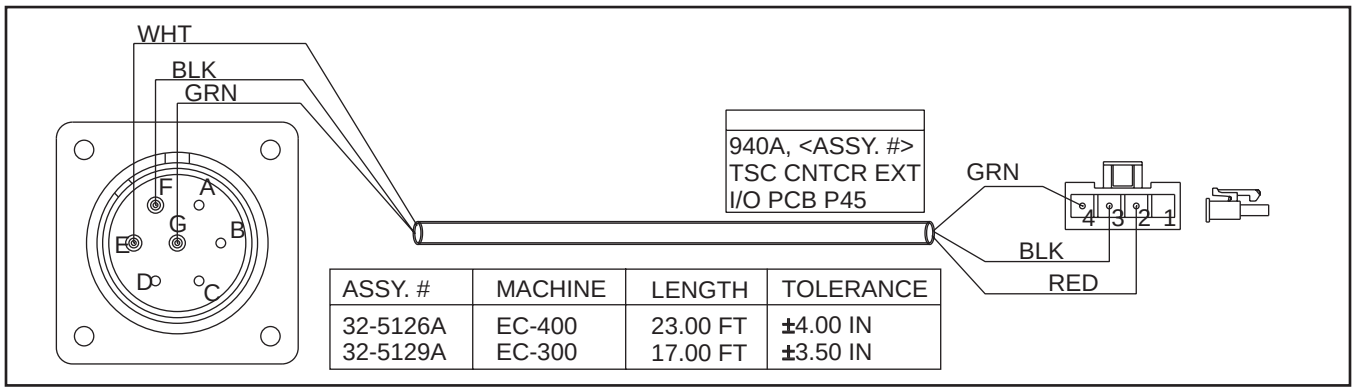


| ASSY. # | MACHINE | LENGTH | TOLERANCE |
|---|---|---|---|
| 32-5126A | EC-400 | 23.00 FT | ±4.00 IN |
| 32-5129A | EC-300 | 17.00 FT | ±3.50 IN |

## Cable 950, Low Air/Oil - 13 FT (33-9506)

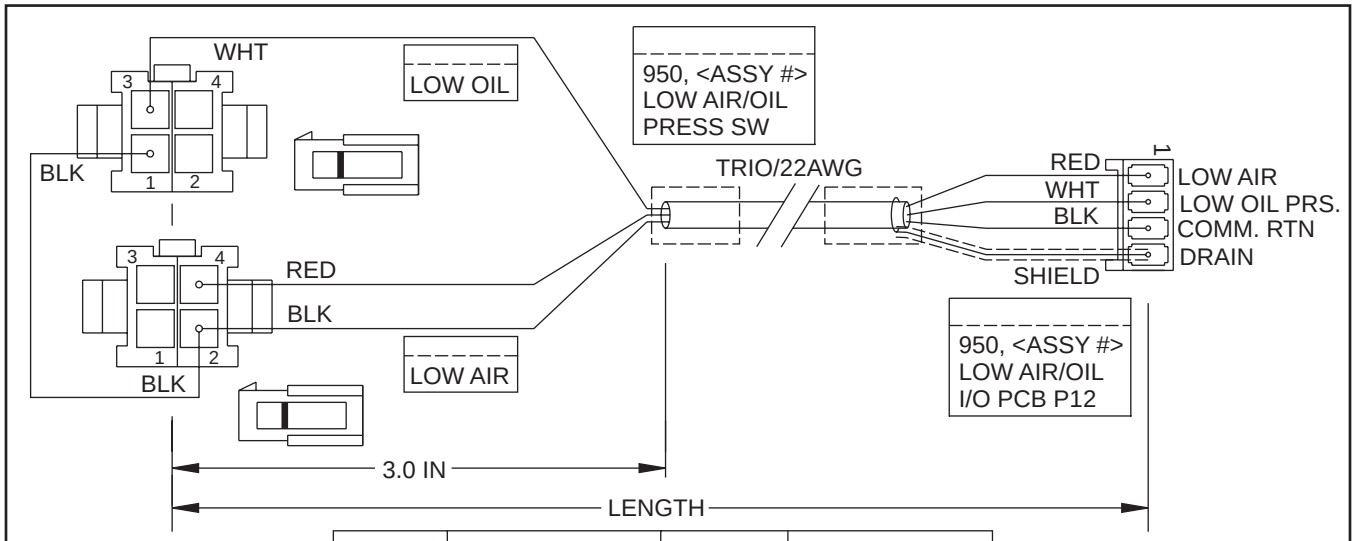


| ASSY. # | MACHINE | LENGTH | TOLERANCE |
|---|---|---|---|
| 33-9506 | VF3-5 | 13.00 FT | ±3.00 IN |
| 33-9509 | VS-1/3 | 32.00 FT | 1.5% of Length |
| 33-9512 | VF-1/2 | 10.50 FT | ±3.00 IN |
| 33-9514 | VR-11, HS3-7 | 22.75 FT | ±3.50 IN |
| 33-9515 | EC-1600, VF6-11 | 20.50 FT | ±3.50 IN |
| 33-9250 | VB-3/X | 50.00 FT | 1.5% of Length |

## Cable 960, Low Lube (33-1334)

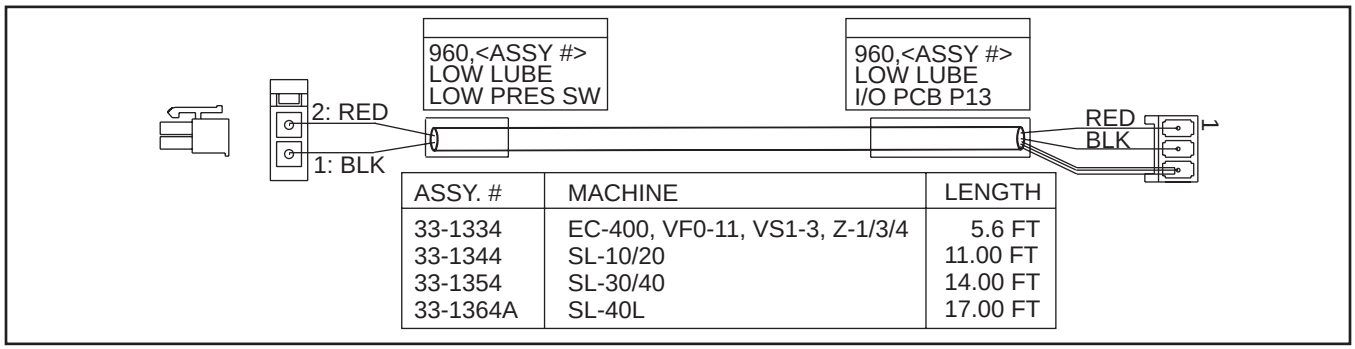


| ASSY. # | MACHINE | LENGTH |
|---|---|---|
| 33-1334 | EC-400, VF0-11, VS1-3, Z-1/3/4 | 5.6 FT |
| 33-1344 | SL-10/20 | 11.00 FT |
| 33-1354 | SL-30/40 | 14.00 FT |
| 33-1364A | SL-40L | 17.00 FT |

## Cable 960, Low Lube Spindle Pump (33-1960)

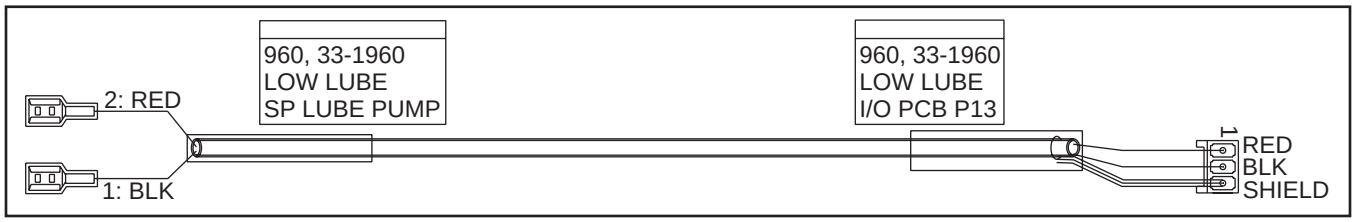


## Cable 960, Low Lube Spindle Pump (33-1961)

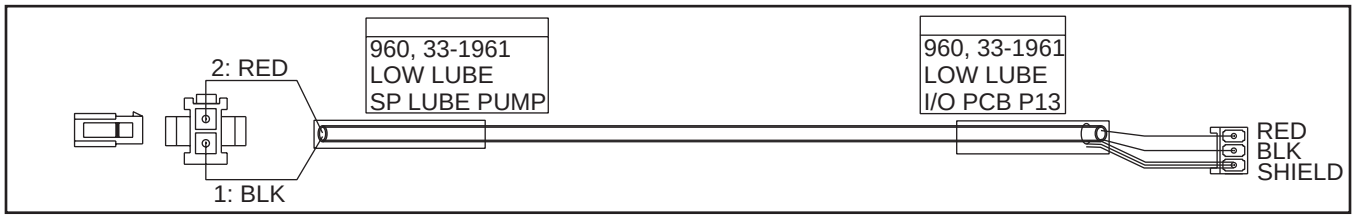


## Cable 970, Vector Drive Overvoltage (33-4049A)

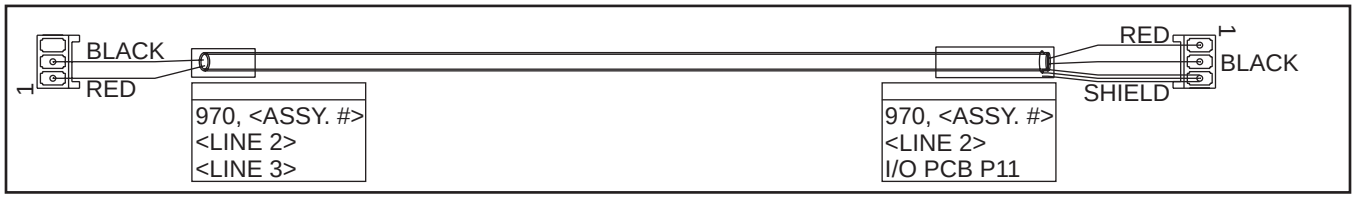


## Cable 970, Power Supply Fault - MiniMill (33-4149A)

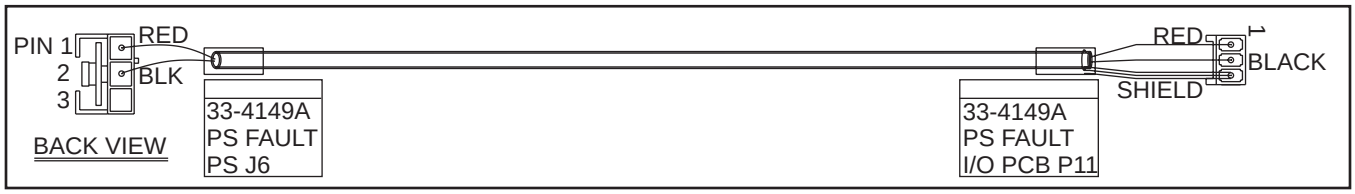

## Cable 1040, Triple Interlock Solenoid Power HCE 500 (33-1065)

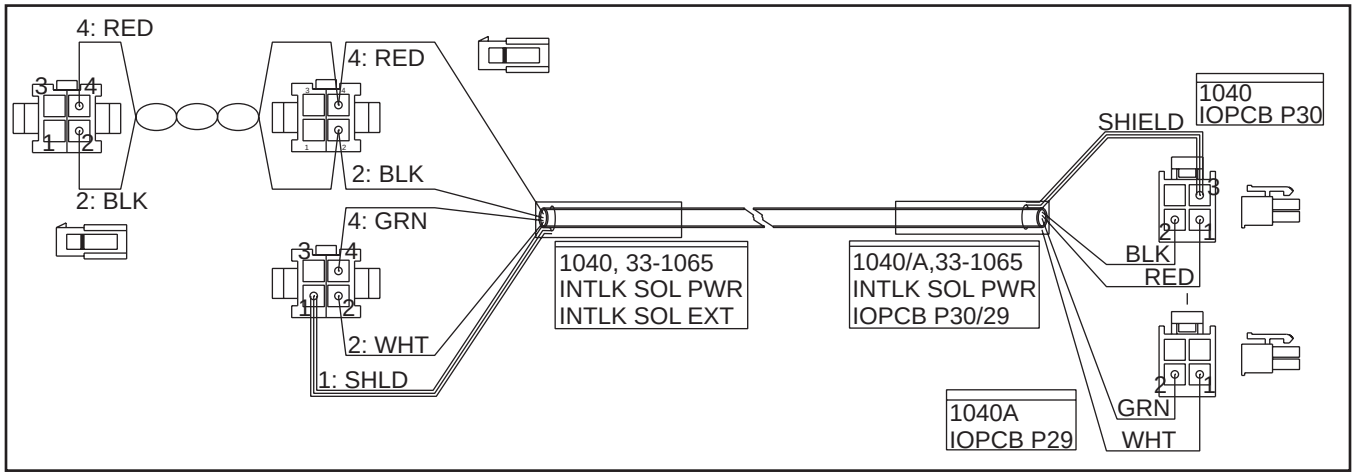


## Cable 1050, CE Interlock Switch (33-1151A)

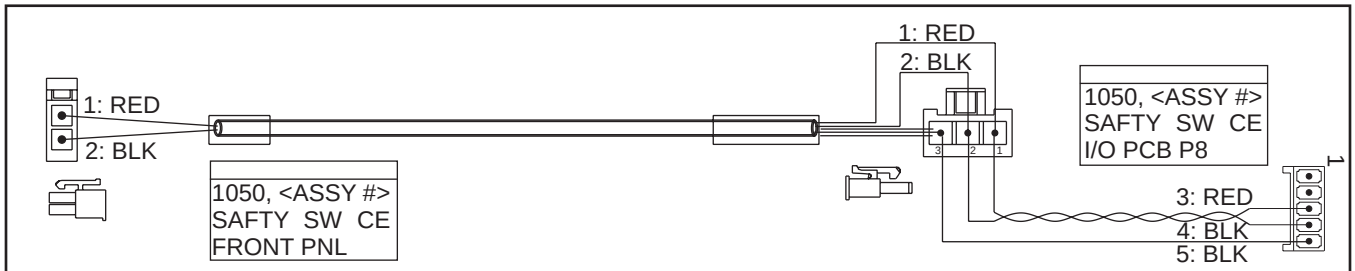


| ASSY. # | MACHINE | LENGTH | LABEL 1 <LINE 2> | LABEL 2 <LINE 2> |
|---|---|---|---|---|
| 33-1151A | TL-1/2 CE/DOM | 12.00 FT | SAFTY SW CE | SAFTY SW CE |
| 33-1153A | TL-3 CE/DOM | 14.70 FT | SAFTY SW CE | SAFTY SW CE |
| 33-1158 | TL-4 | 21.00 FT | HOLD TO RUN | HOLD TO RUN |

## Cable 1070, Skip Dual Probe (33-9103B)

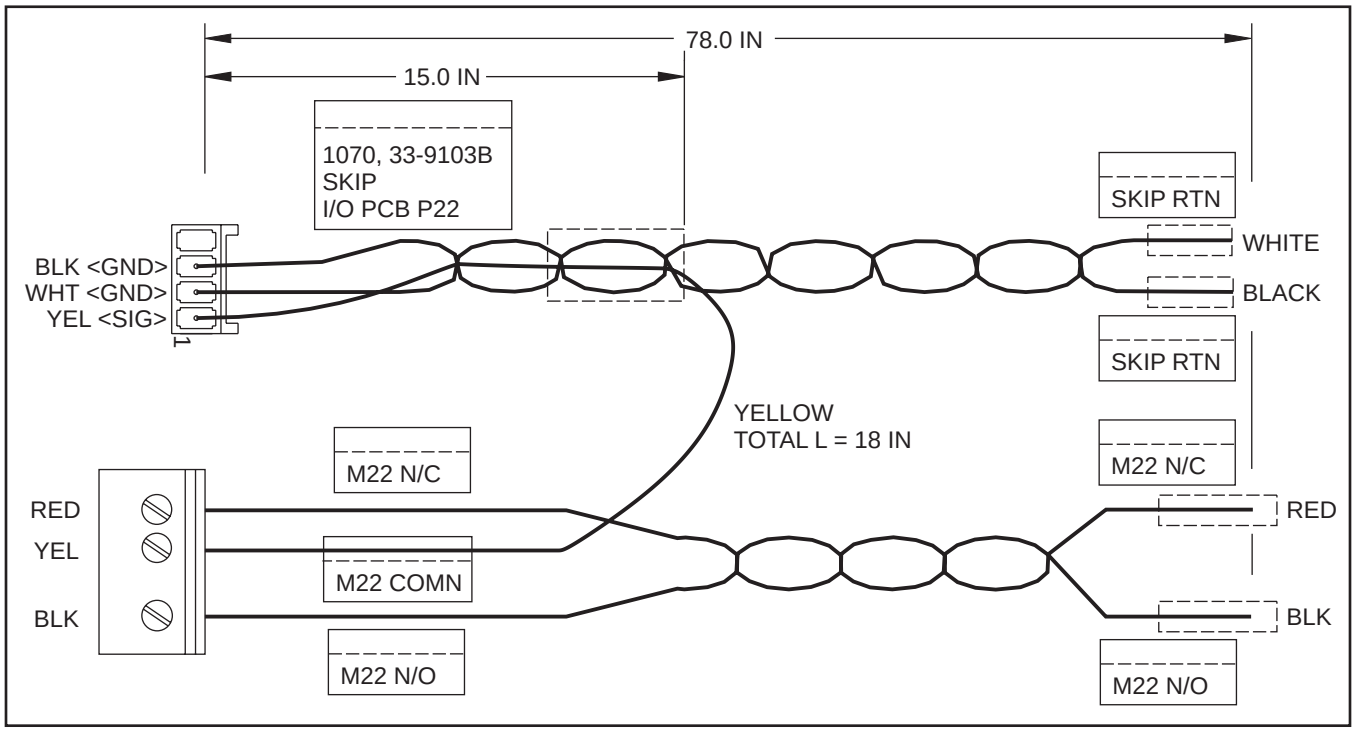


## Cable 1070, Skip Dual Probe w/8M (33-9108)

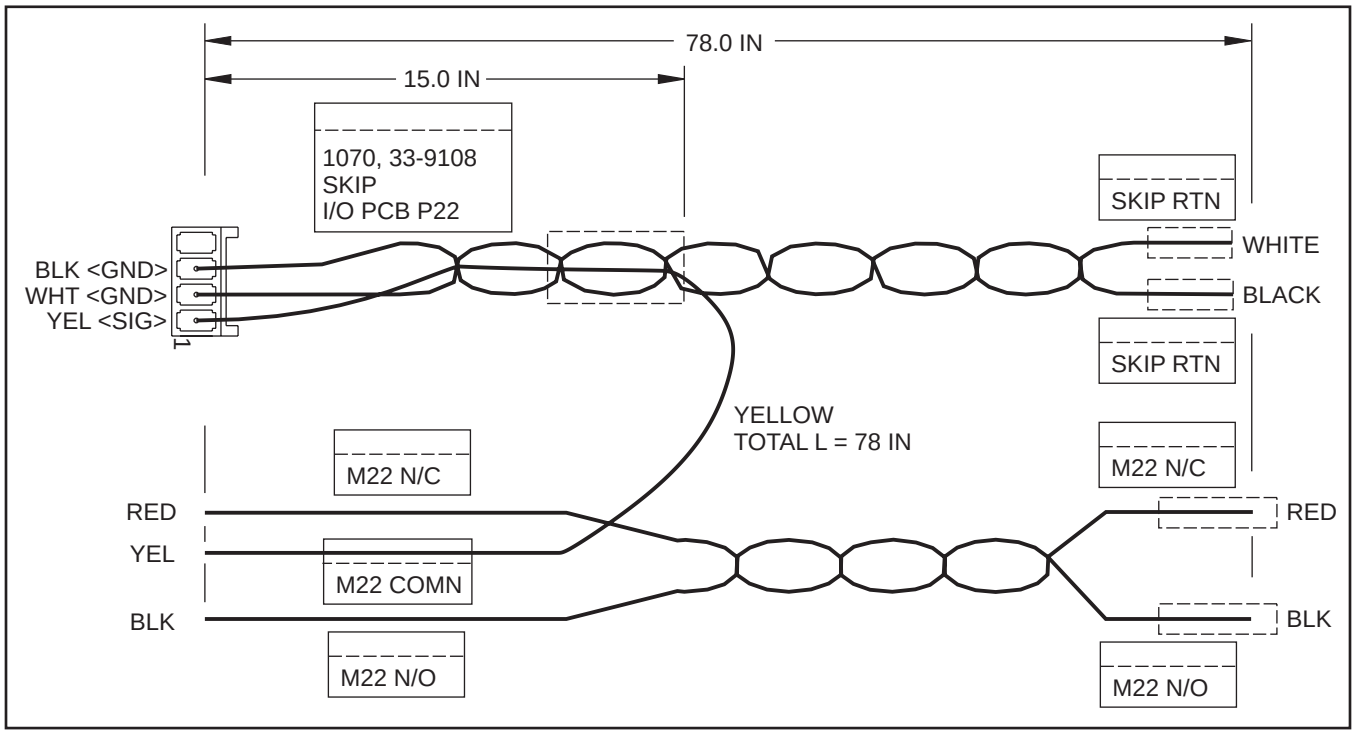

## Cable, 115V GFCI SW (33-0098C)

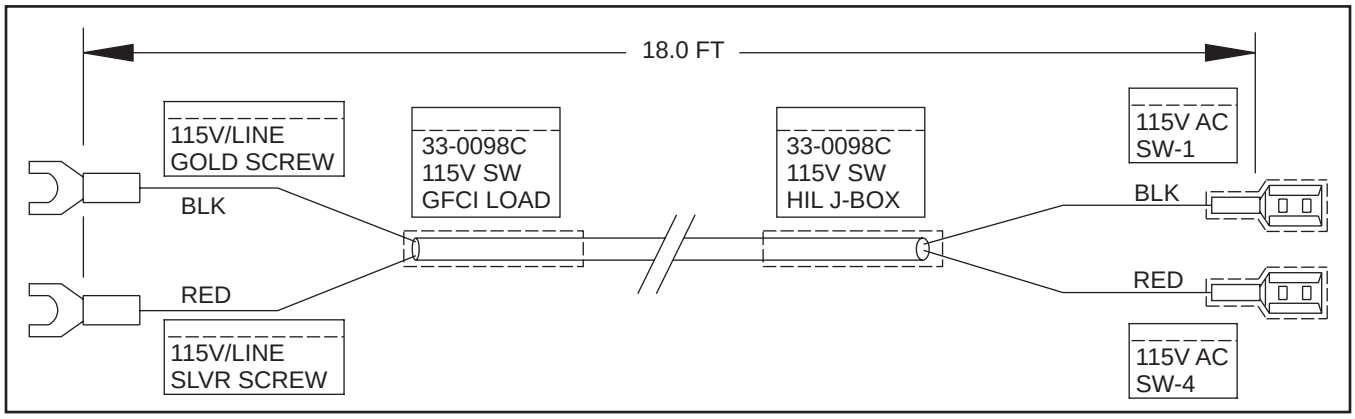


## Cable, Ethernet Data Option ICOP 3' (33-0221)

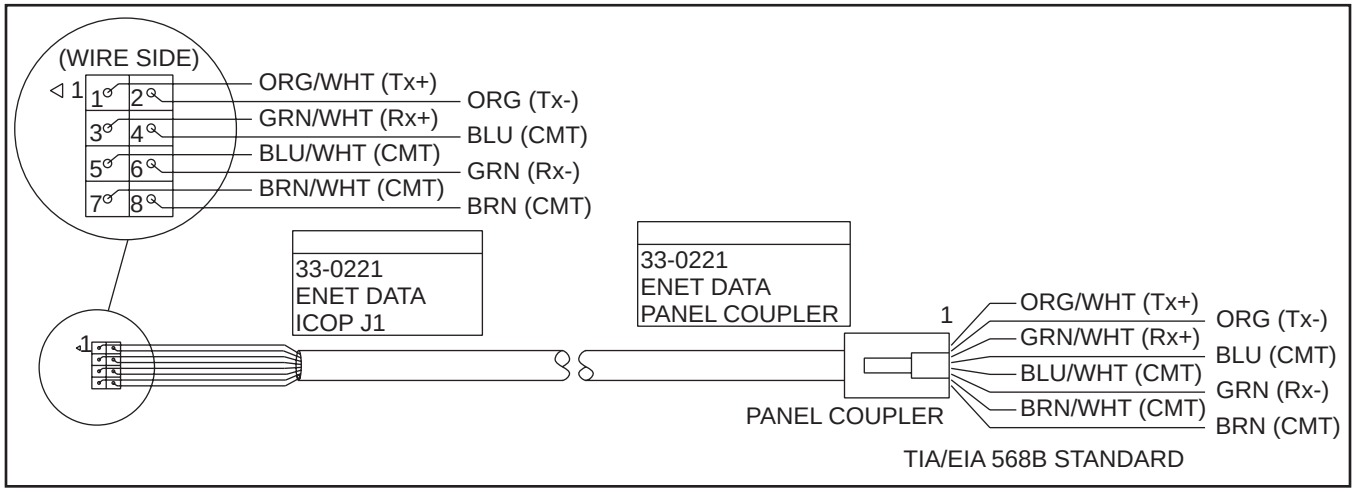

## Cable, Low Voltage Power Supply - SinPro 9 amp (33-0577A)

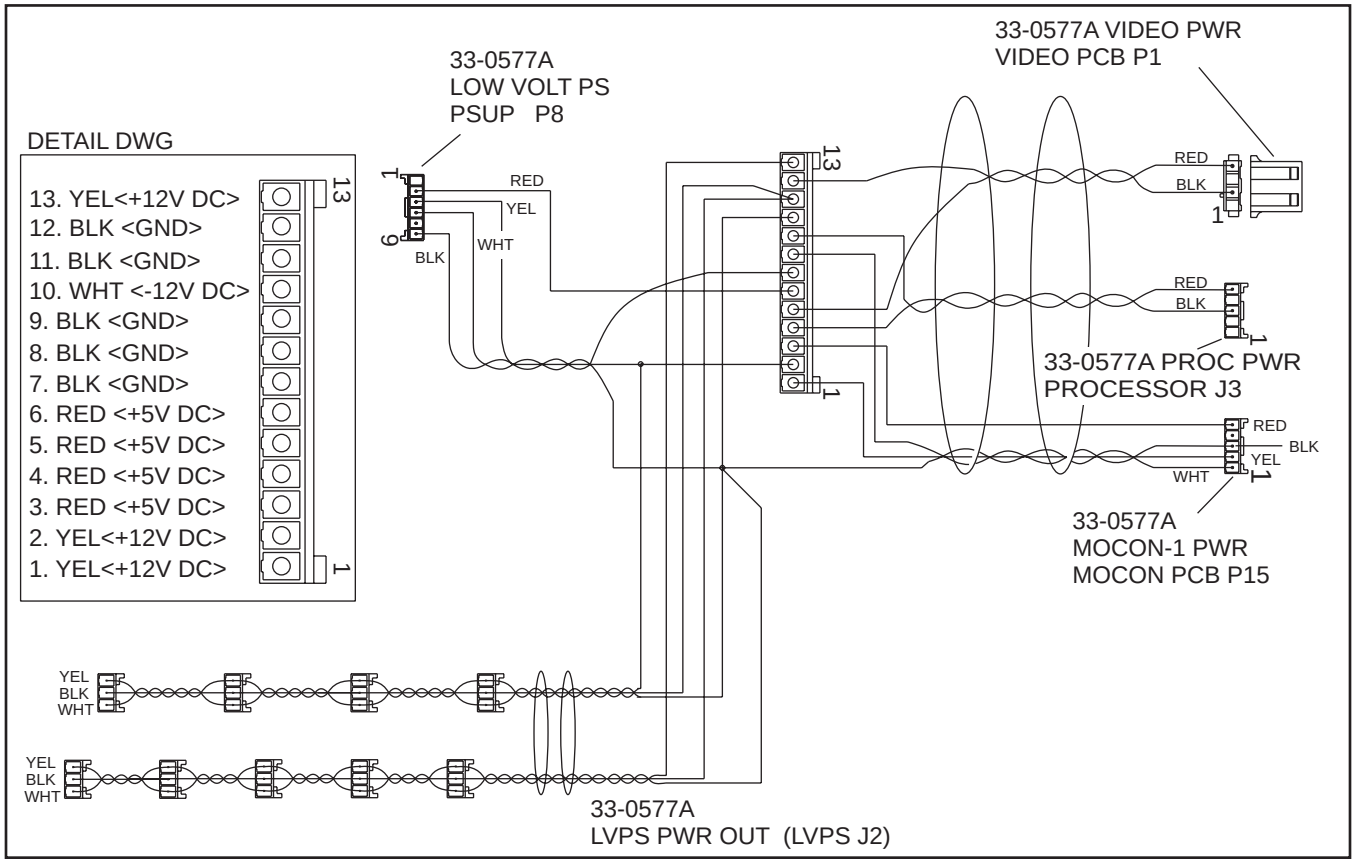


## Delta Contact - Vector Drive Cable 10hp (33-0696A)

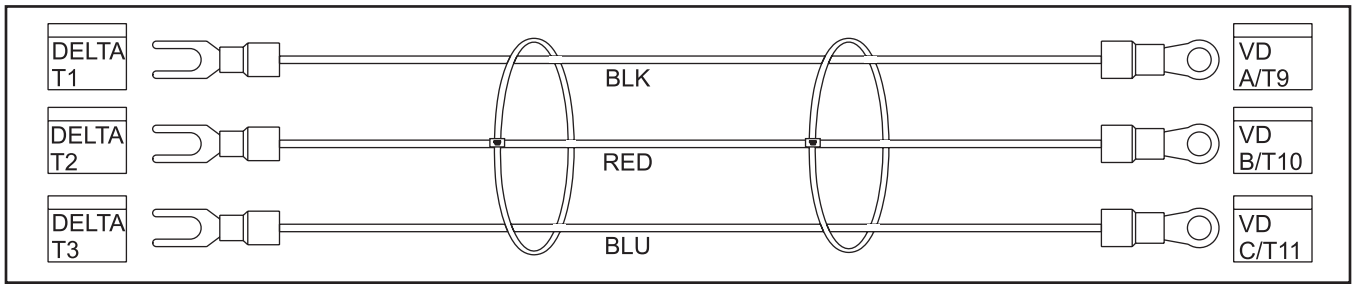


## 12V Beeper Cable (33-0705A)

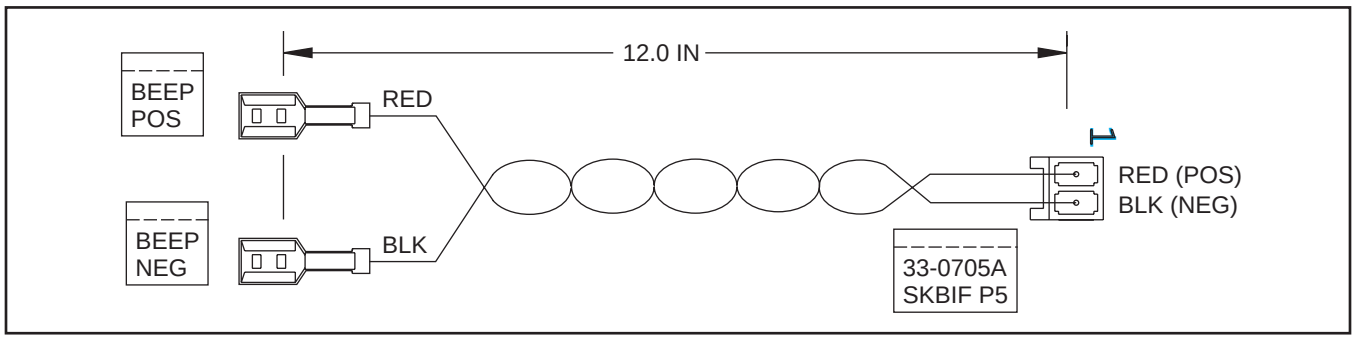

## Side-Mount Tool Changer Brake Resistor Cable (33-0815B)

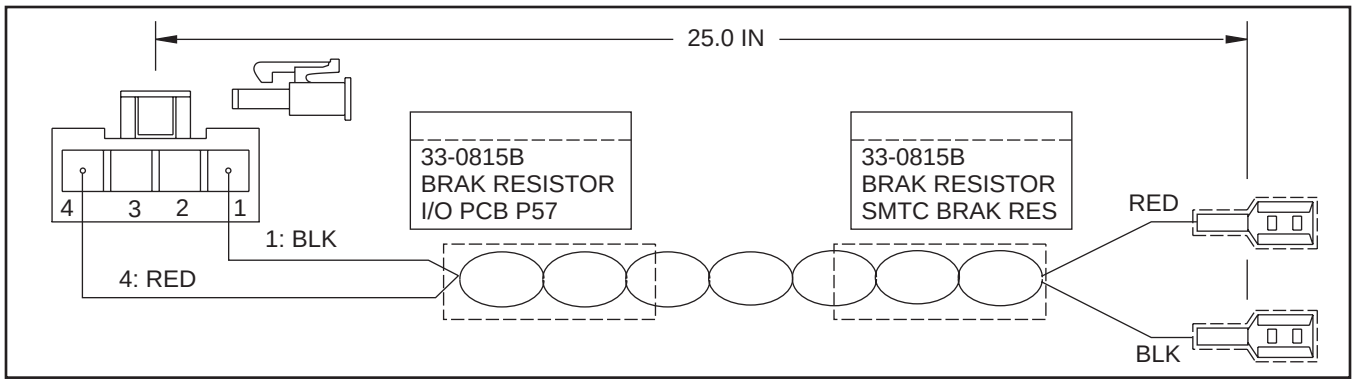


## Cable, USB Assembly - ICOP (32-0859)

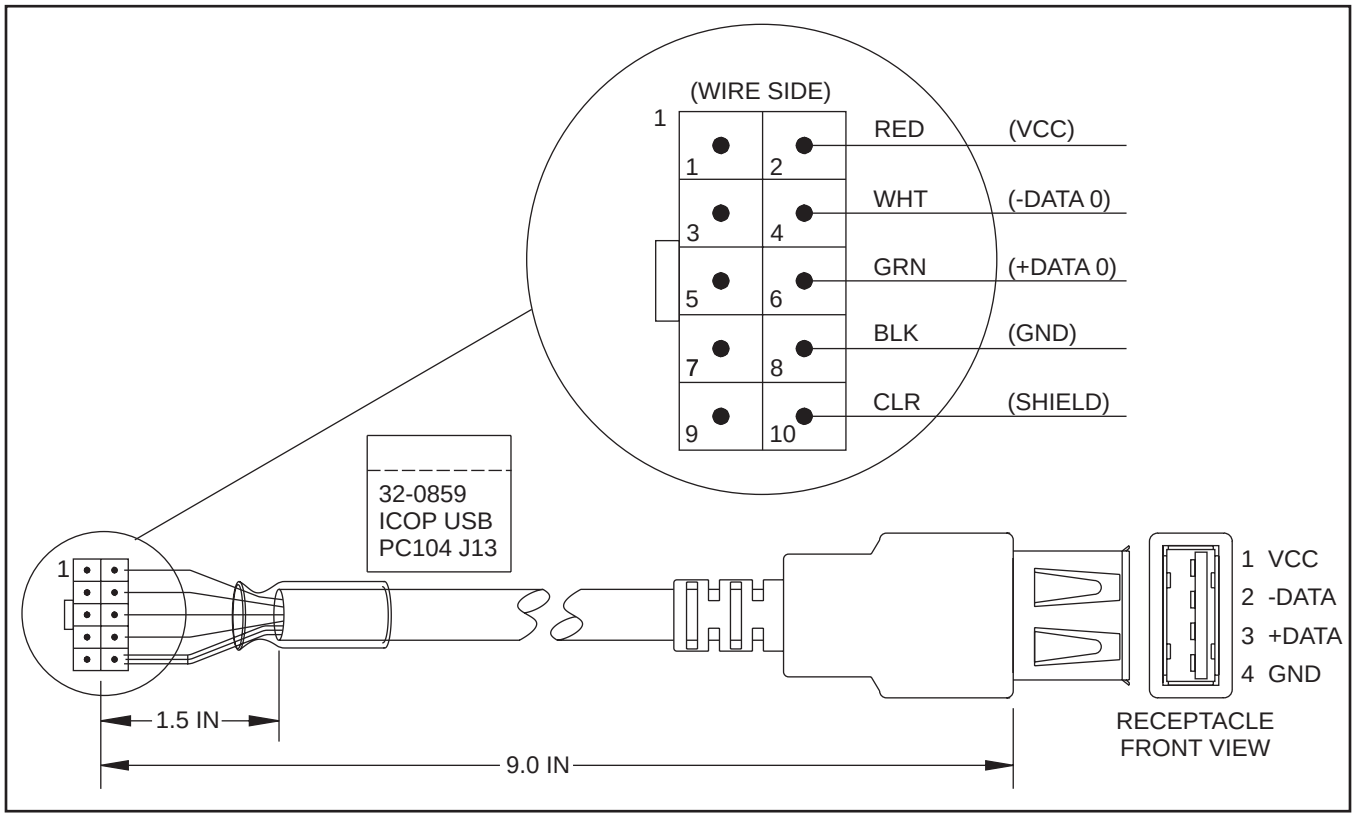

## Cable, Axis Motor/Encoder - 41.25 FT (32-1422B)

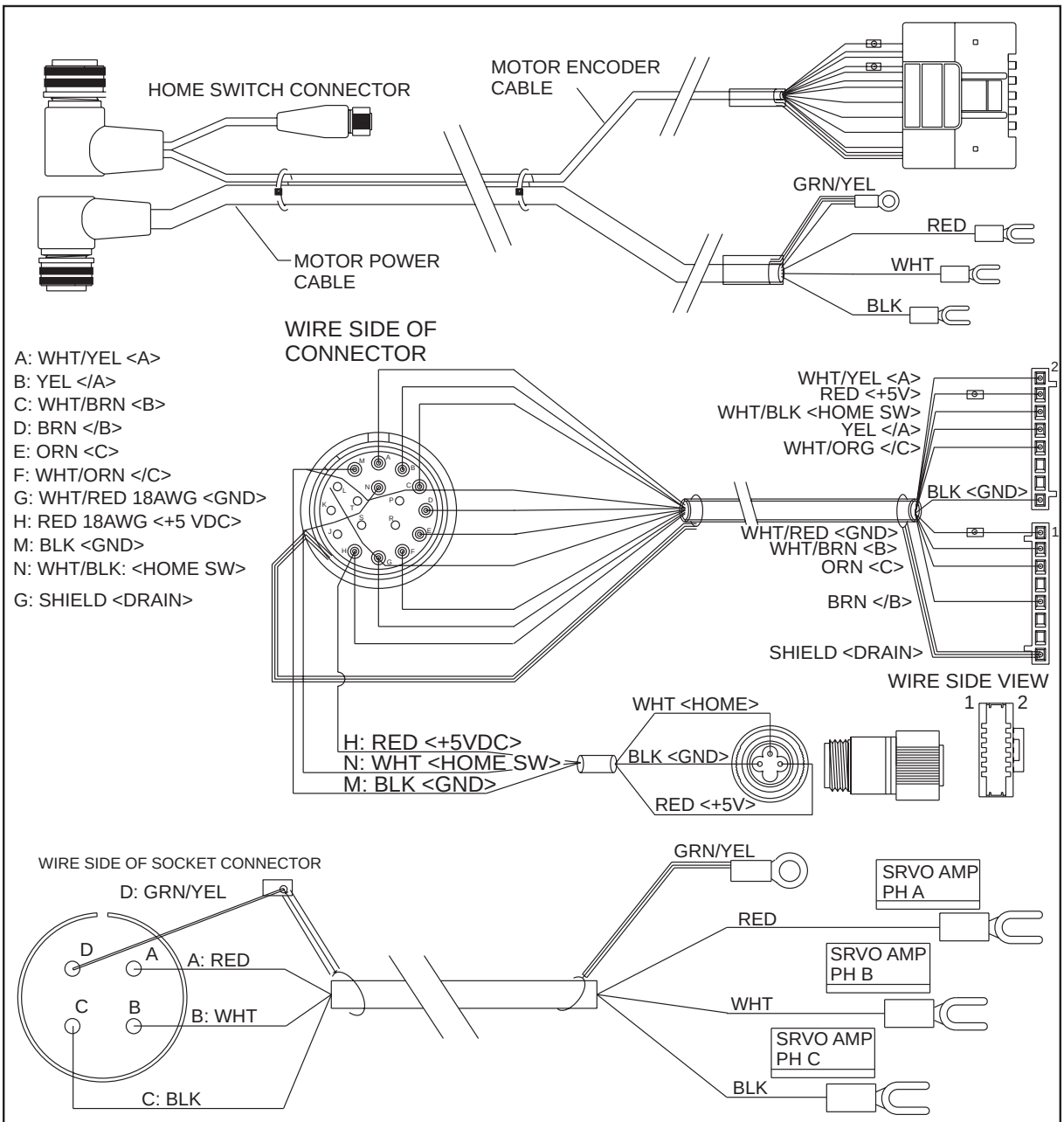





| ASSY. # | MACHINE | LENGTH | TOLERANCE |
|---|---|---|---|
| 32-1422B | Y-AXIS GR510/512/710/712 | | |
| | Encoder Cable | 43.00 FT | ±1.5% of Length |
| | Motor Cable | 41.25 FT | ±1.5% of Length |
| 32-1424D | U-AXIS APL20/20T, SL-20BAPL/TBAPL | | |
| | Encoder Cable | 32.50 FT | ±1.5% of Length |
| | Motor Cable | 30.60 FT | ±1.5% of Length |
| 32-2830C | TT-AXIS SL-40L | | |
| | Encoder Cable | 34.60 FT | ±1.5% of Length |
| | Motor Cable | 33.00 FT | ±1.5% of Length |
| 32-2831 | Y-AXIS SR-200 | | |
| | Encoder Cable | 39.00 FT | ±1.5% of Length |
| | Motor Cable | 38.00 FT | ±1.5% of Length |

## Cable, Axis Motor/Encoder - 14.25 FT (32-1425F)

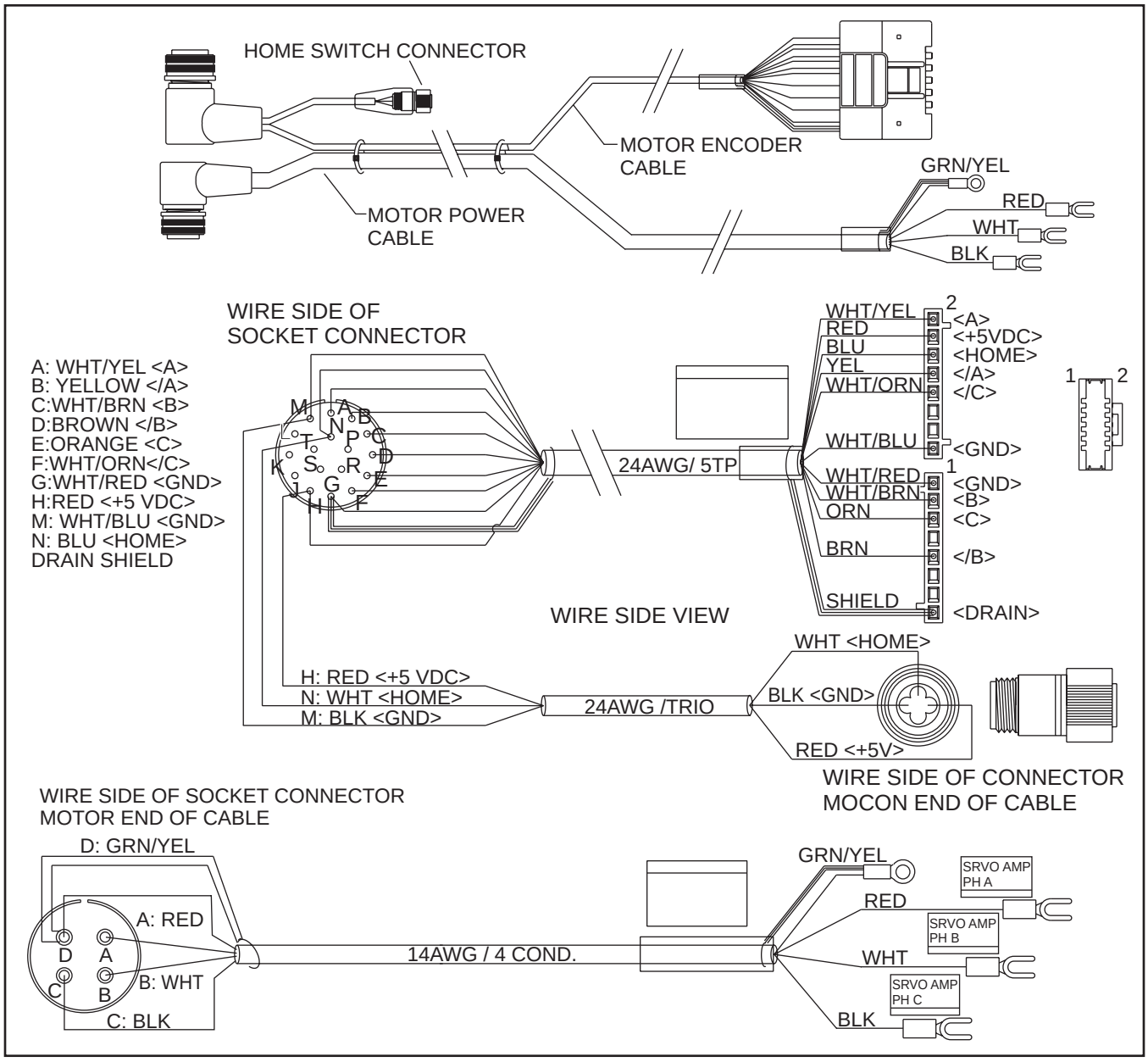

## Cable, Axis Motor/Encoder - 14.25 FT (32-1425F) Table

| ASSY. # | MACHINE | LENGTH | TOLERANCE |
|---|---|---|---|
| 32-1425F | X-AXIS VF1/2, VM2, VF2SS, GRs, MM, SMM | | |
| | Y-AXIS VF6-11 | | |
| | Encoder Cable | 16.00 FT | ±3.00 IN |
| | Motor Cable | 14.25 FT | ±3.00 IN |
| 32-1429F | X-AXIS VF6-11, VR-8/9/11, EC-1600 | | |
| | Encoder Cable | 28.50 FT | ±4.00 IN |
| | Motor Cable | 27.00 FT | ±4.00 IN |
| 32-1437F | X-AXIS VF-3/4/5, VF-3/4SS, VM3 | | |
| | Encoder Cable | 20.25 FT | ±3.50 IN |
| | Motor Cable | 18.50 FT | ±3.50 IN |
| 32-1557A | X-AXIS TL-3/3W | | |
| | Encoder Cable | 14.25 FT | ±3.00 IN |
| | Motor Cable | 12.50 FT | ±3.00 IN |
| 32-1609A | X-AXIS GT-20 | | |
| | Encoder Cable | 8.20 FT | ±2.00 IN |
| | Motor Cable | 9.50 FT | ±2.00 IN |
| 32-1625 | PC-AXIS EC-630 | | |
| | Encoder Cable | 26.25 FT | ±1.5% of Length |
| | Motor Cable | 23.50 FT | ±1.5% of Length |
| 32-1438F | Y-AXIS VF1-5, VM3, VF2-4SS, TM1/2 | | |
| | Encoder Cable | 9.75 FT | ±2.00 IN |
| | Motor Cable | 8.00 FT | ±2.00 IN |
| 32-1528A | Y-AXIS MM, SMM | | |
| | Encoder Cable | 14.00 FT | ±2.50 IN |
| | Motor Cable | 12.25 FT | ±2.50 IN |
| 32-1426F | Z-AXIS SL-10 (ALL) | | |
| | Encoder Cable | 7.80 FT | ±2.00 IN |
| | Motor Cable | 11.70 FT | ±2.00 IN |
| 32-1428F | Z-AXIS VF-5/50 | | |
| | Encoder Cable | 7.00 FT | ±2.00 IN |
| | Motor Cable | 8.00 FT | ±2.00 IN |
| 32-1508B | Z-AXIS EC-400/500/400PP | | |
| | Encoder Cable | 20.00 FT | ±3.00 IN |
| | Motor Cable | 18.25 FT | ±3.00 IN |
| 32-1530A | Z-AXIS VF6-11/50, VR8/9/11 | | |
| | Encoder Cable | 11.00 FT | ±2.50 IN |
| | Motor Cable | 12.00 FT | ±2.50 IN |
| 32-1541B | Z-AXIS TL-1/2/3/3W | | |
| | Encoder Cable | 9.50 FT | ±2.00 IN |
| | Motor Cable | 7.75 FT | ±2.00 IN |
| 32-1539A | V-AXIS APL20/T, SL-20BAR/TBAPL | | |
| | Encoder Cable | 18.00 FT | ±2.50 IN |
| | Motor Cable | 15.40 FT | ±2.50 IN |
| 32-1549B | Y-AXIS MDC-500 | | |
| | Encoder Cable | 17.00 FT | ±2.50 IN |
| | Motor Cable | 18.90 FT | ±2.50 IN |
| 32-2800G | A-AXIS SL-10 (ALL) | | |
| | Encoder Cable | 13.50 FT | ±2.50 IN |
| | Motor Cable | 18.00 FT | ±2.50 IN |
| 32-2802A | TT-AXIS SL-40B/TB | | |
| | TS-AXIS TL25/B | | |
| | Encoder Cable | 22.10 FT | ±1.5% of Length |
| | Motor Cable | 20.00 FT | ±1.5% of Length |
| 32-2810H | TS-AXIS TL-15/B | | |
| | Encoder Cable | 19.30 FT | ±2.50 IN |
| | Motor Cable | 17.70 FT | ±2.50 IN |
| 32-1630 | Z-AXIS VF-3&4/50 | | |
| | Encoder Cable | 11.00 FT | ±2.00 IN |
| | Motor Cable | 12.00 FT | ±2.00 IN |

## Cable, Axis Motor/Encoder Brake - 28.9 FT (32-1434D)

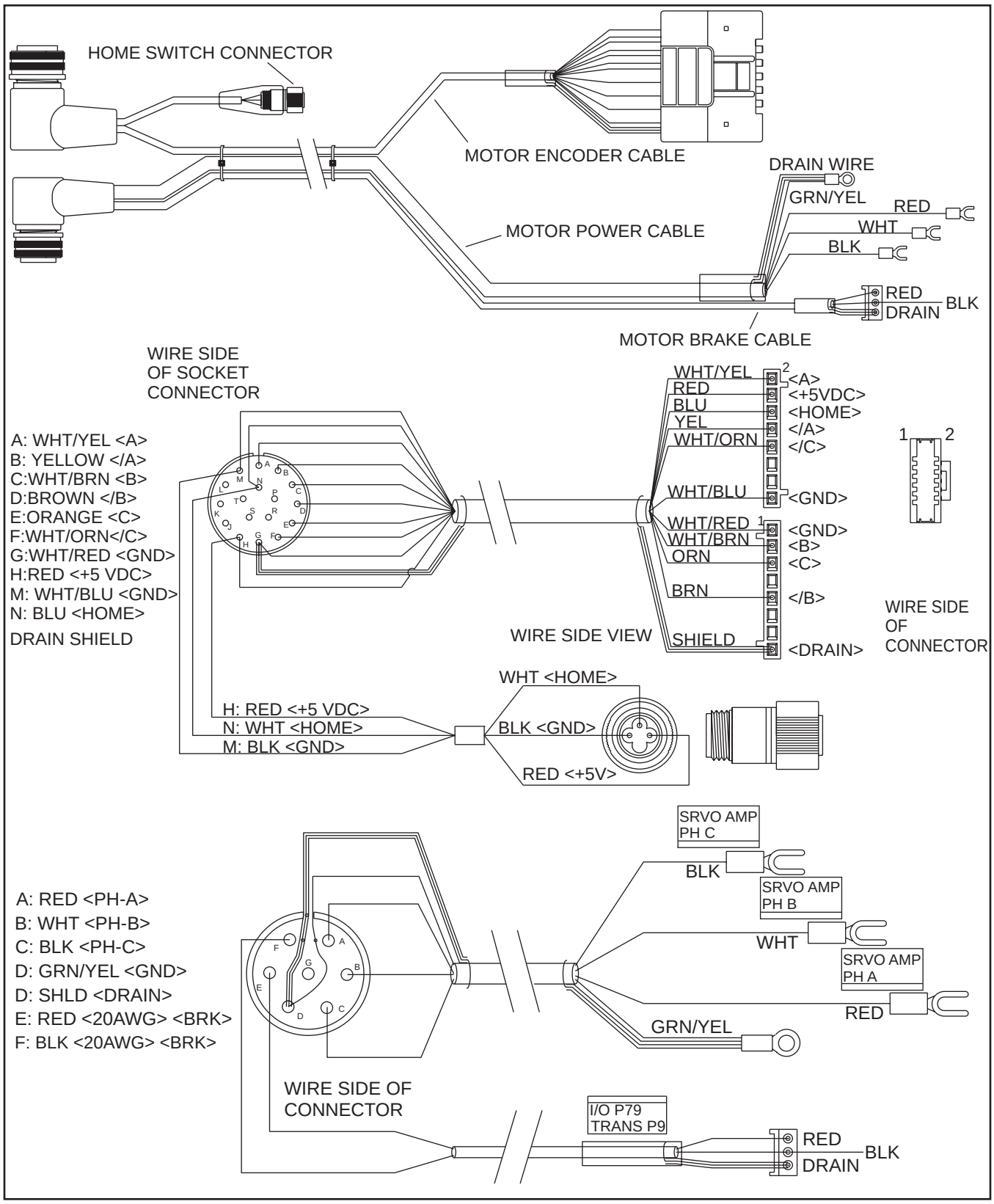

## Cable, Axis Motor/Encoder Brake - 28.9 FT (32-1434D) Table

| ASSY. # | MACHINE | LENGTH | TOLERANCE |
|---|---|---|---|
| 32-1434D | X-AXIS SL-40L | | |
| | Encoder Cable | 30.70 FT | ±1.5% of Length |
| | Motor Cable | 28.90 FT | ±1.5% of Length |
| | Motor Brake Cable | 28.90 FT | ±1.5% of Length |
| 32-1448D | W-AXIS APL20T/SL20BAPL/SL20TBAPL | | |
| | Encoder Cable | 28.00 FT | ±1.5% of Length |
| | Motor Cable | 26.00 FT | ±1.5% of Length |
| | Motor Brake Cable | 26.00 FT | ±1.5% of Length |
| 32-1449C | X-AXIS SL-20/T/B/BAPL/TBAPL, TL-15/B, SL-30/T/B/TB, TL-25/B | | |
| | Encoder Cable | 19.60 FT | ±3.50 IN |
| | Motor Cable | 17.90 FT | ±3.50 IN |
| | Motor Brake Cable | 17.90 FT | ±3.50 IN |
| 32-1534C | X-AXIS SL-10 (ALL) | | |
| | Encoder Cable | 14.75 FT | ±3.00 IN |
| | Motor Cable | 17.00 FT | ±3.00 IN |
| | Motor Brake Cable | 17.00 FT | ±3.00 IN |
| 32-1536B | Z-AXIS VF1-4, MM, SMM, VF2SS, VM2 | | |
| | Encoder Cable | 7.00 FT | ±2.00 IN |
| | Motor Cable | 8.00 FT | ±2.00 IN |
| | Motor Brake Cable | 8.00 FT | ±2.00 IN |
| 32-1537A | X-AXIS SL-40B/TB | | |
| | Encoder Cable | 25.00 FT | ±1.5% of Length |
| | Motor Cable | 23.00 FT | ±1.5% of Length |
| | Motor Brake Cable | 23.00 FT | ±1.5% of Length |
| 32-1509B | Y-AXIS EC-400/500/400PP | | |
| | Encoder Cable | 17.10 FT | ±1.5% of Length |
| | Motor Cable | 19.00 FT | ±1.5% of Length |
| | Motor Brake Cable | 19.00 FT | ±1.5% of Length |

## Cable, Axis Motor/Encoder - 8.25 FT (32-1491B)

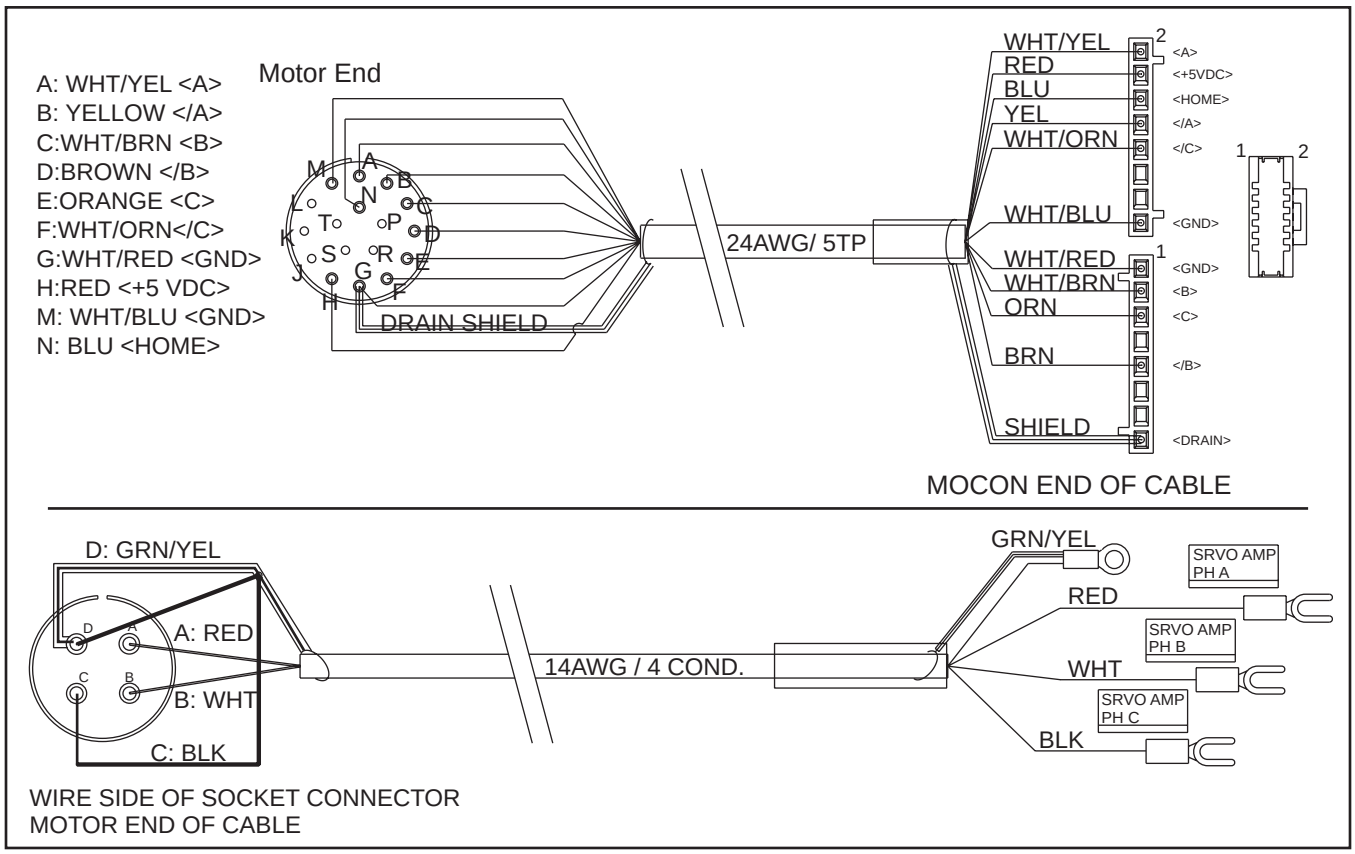


## Cable, Axis Motor/Encoder - 8.25 FT (32-1491B) Table

| ASSY. # | MACHINE | LENGTH | TOLERANCE |
|---|---|---|---|
| 32-1491B | TC-AXIS VF-2/3/4SS, VF-2/3SSYT | | |
| | Encoder Cable | 8.25 FT | ±2.00 IN |
| | Motor Cable | 9.25 FT | ±2.00 IN |
| 32-1597 | TC-AXIS VF-6SS | | |
| | Encoder Cable | 13.50 FT | ±3.00 IN |
| | Motor Cable | 14.50 FT | ±3.00 IN |
| 32-1506A | TC-AXIS EC-300/1600/2000, MDC-500 | | |
| | LT-AXIS SL-40/B | | |
| | Encoder Cable | 22.00 FT | ±3.00 IN |
| | Motor Cable | 20.25 FT | ±3.00 IN |
| 32-1602A | TC-AXIS EC-400/500 | | |
| | Encoder Cable | 25.00 FT | ±3.00 IN |
| | Motor Cable | 23.25 FT | ±3.00 IN |
| 32-1517A | C-AXIS SL20/B/T/TB, TL15/B, APL20/T | | |
| | Encoder Cable | 17.00 FT | ±3.00 IN |
| | Motor Cable | 14.80 FT | ±3.00 IN |
| 32-1518A | C-AXIS SL30/B/T/TB, TL-25/B | | |
| | Encoder Cable | 19.00 FT | ±3.50 IN |
| | Motor Cable | 16.80 FT | ±3.50 IN |
| 32-1519A | C-AXIS SL-40B/TB, SL-40L | | |
| | Encoder Cable | 21.00 FT | ±1.5% of Length |
| | Motor Cable | 18.80 FT | ±1.5% of Length |
| 32-1532A | LT-AXIS SL-30B/TB | | |
| | Encoder Cable | 19.90 FT | ±3.00 IN |
| | Motor Cable | 17.50 FT | ±3.00 IN |
| 32-1533A | LT-AXIS SL-40L | | |
| | Encoder Cable | 26.10 FT | ±1.5% of Length |
| | Motor Cable | 23.70 FT | ±1.5% of Length |

## Contactor Interconnection Cable - 10hp (33-1963)

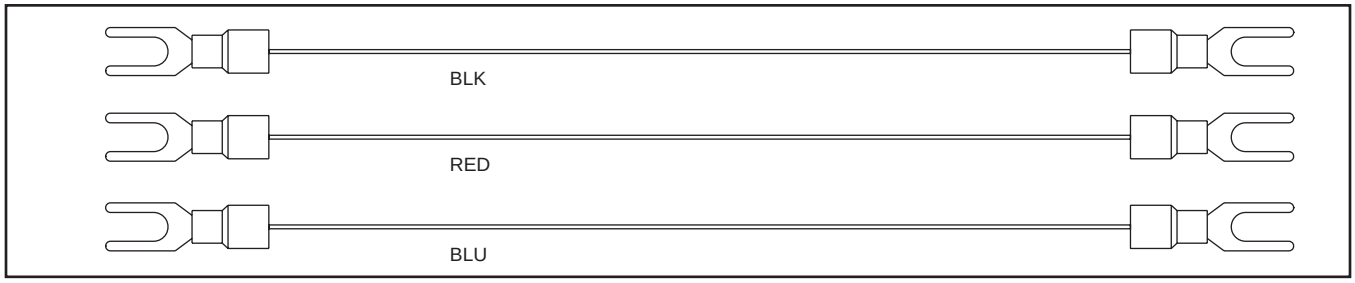


## Cable, Remote Jog Handle Assembly - Molded (33-5751F)

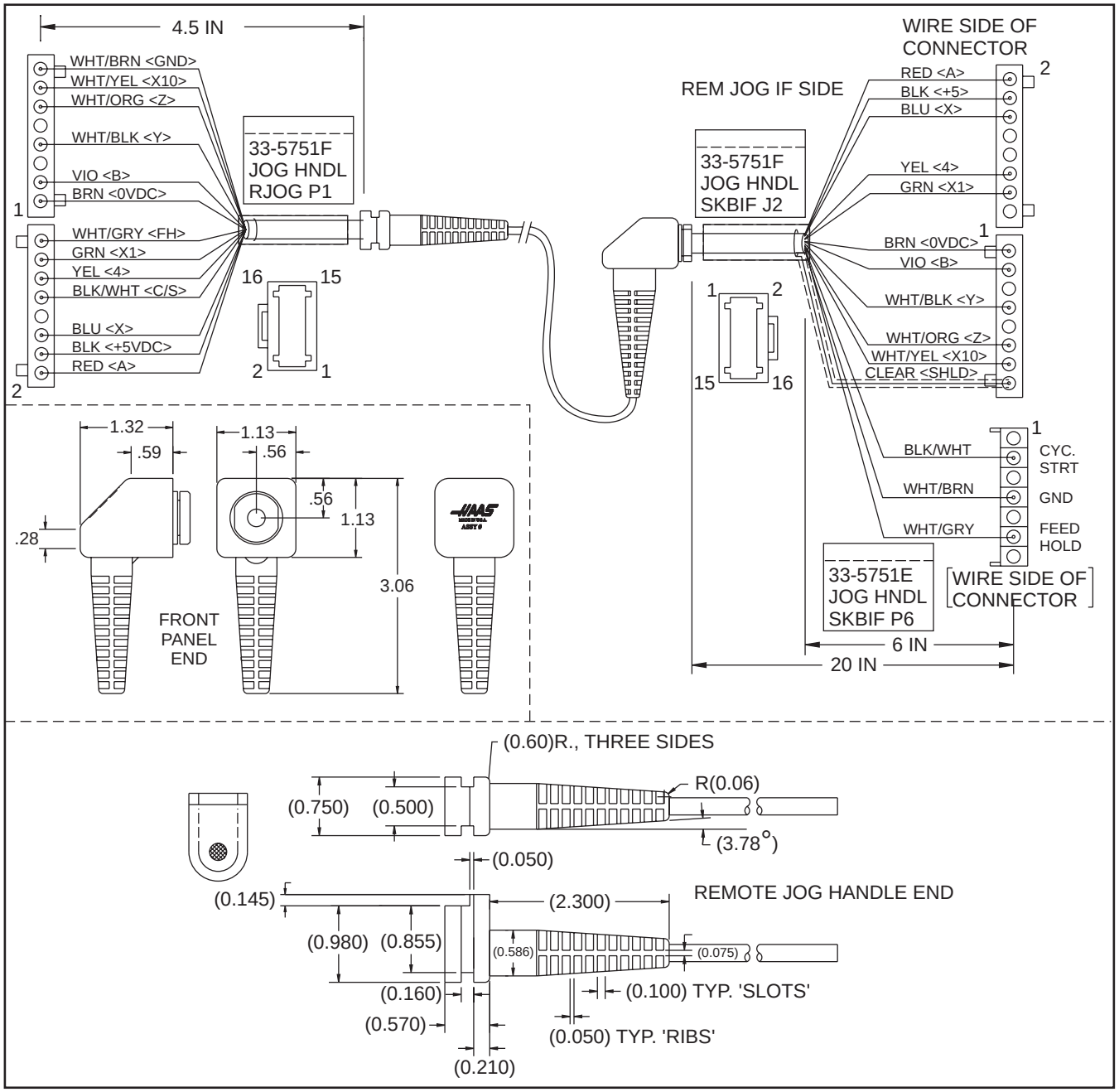

## Cable, +12V/+5V/GND LCD 30W Power Supply Unit (33-8260C)

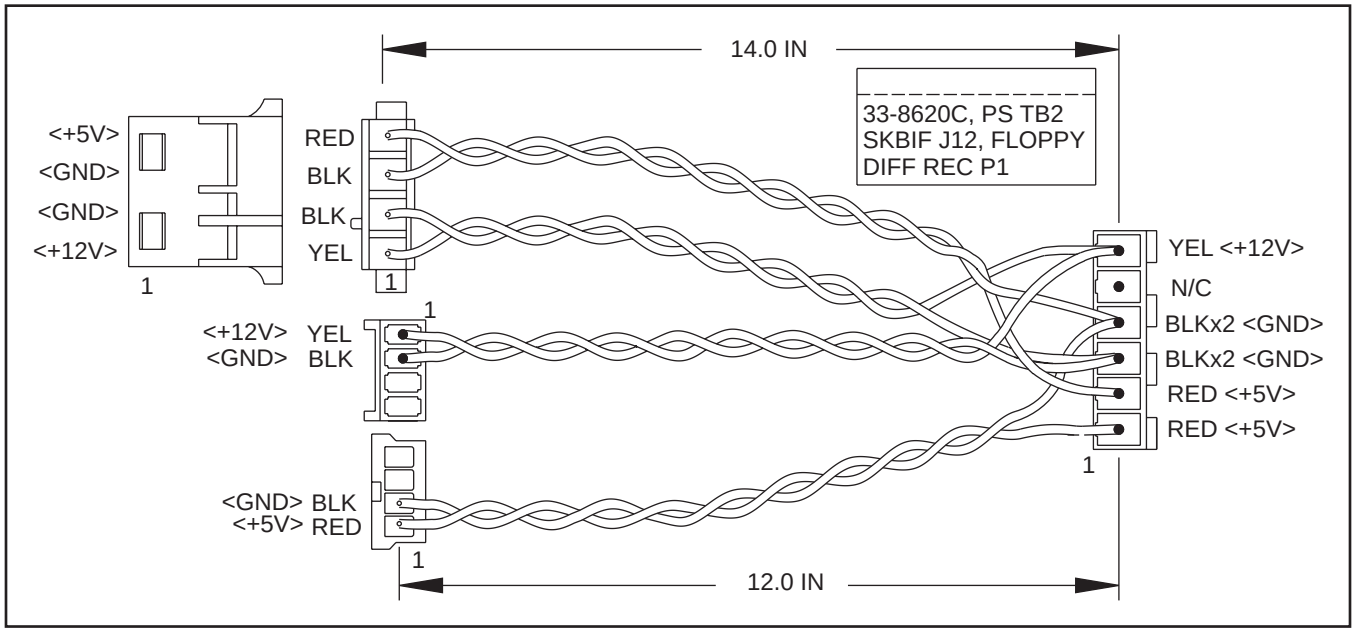

## LVDS Video Data Cable (33-8264A)

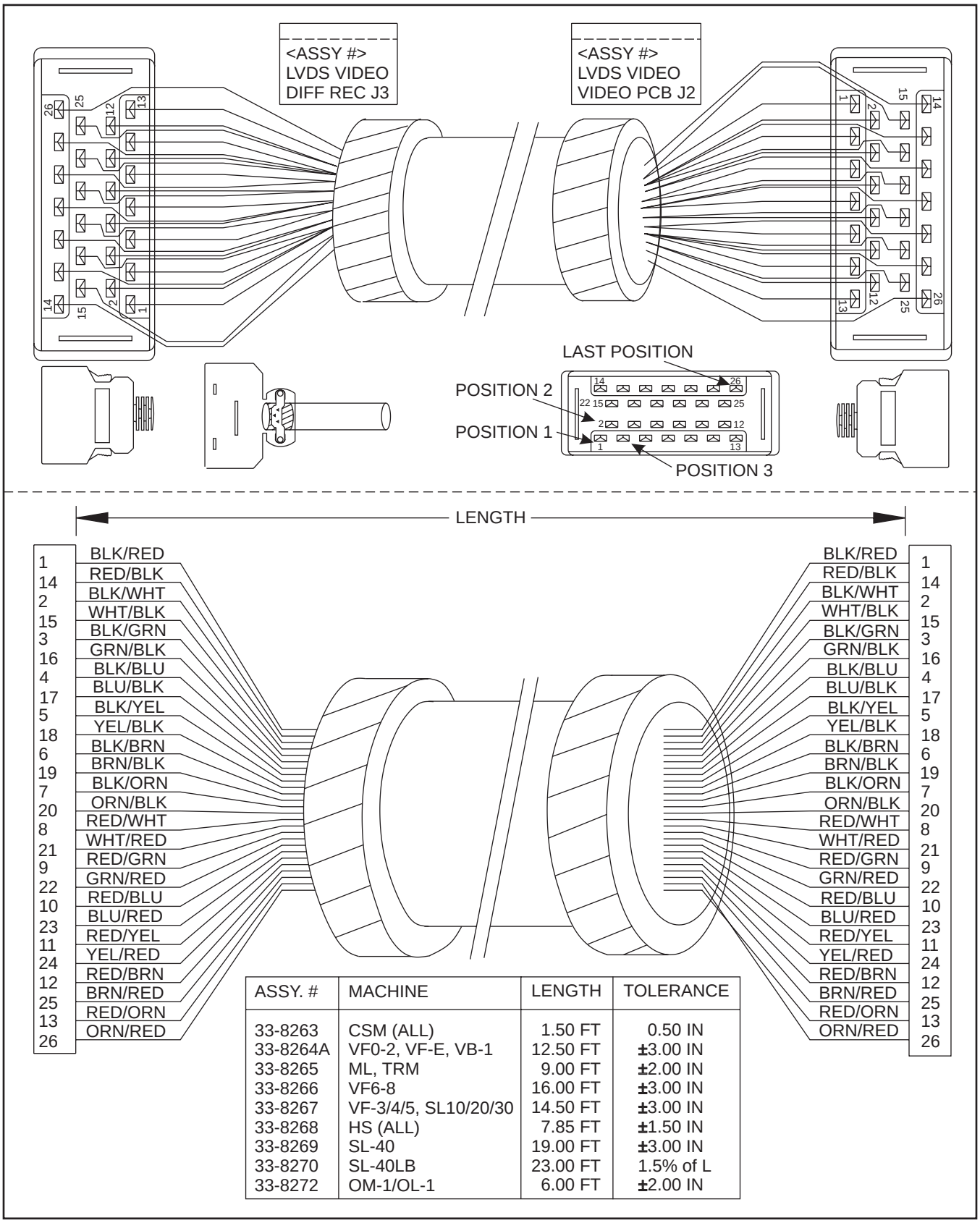


| ASSY. # | MACHINE | LENGTH | TOLERANCE |
|---|---|---|---|
| 33-8263 | CSM (ALL) | 1.50 FT | 0.50 IN |
| 33-8264A | VF0-2, VF-E, VB-1 | 12.50 FT | ±3.00 IN |
| 33-8265 | ML, TRM | 9.00 FT | ±2.00 IN |
| 33-8266 | VF6-8 | 16.00 FT | ±3.00 IN |
| 33-8267 | VF-3/4/5, SL10/20/30 | 14.50 FT | ±3.00 IN |
| 33-8268 | HS (ALL) | 7.85 FT | ±1.50 IN |
| 33-8269 | SL-40 | 19.00 FT | ±3.00 IN |
| 33-8270 | SL-40LB | 23.00 FT | 1.5% of L |
| 33-8272 | OM-1/OL-1 | 6.00 FT | ±2.00 IN |

## Cable, Mori 60 Tool Changer Receptacle Outputs (32-8156A)

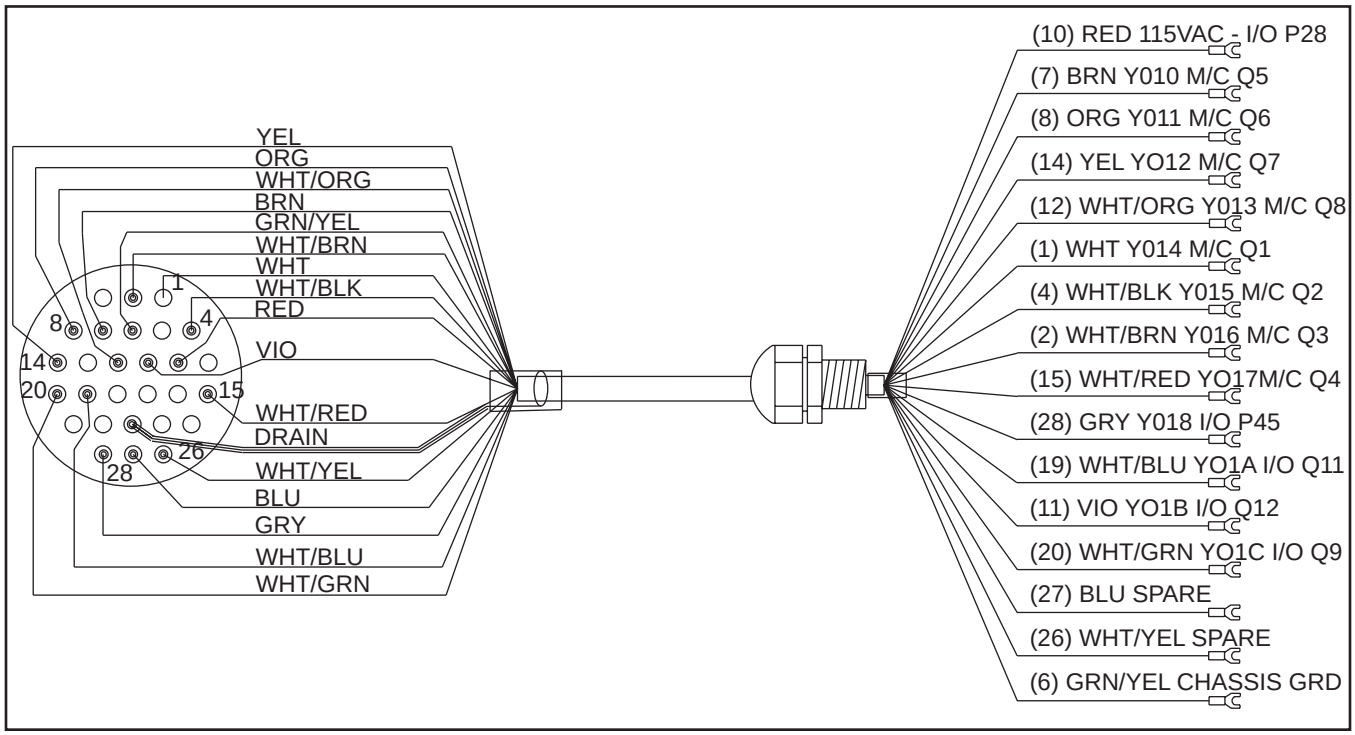

## Front Enclosure Signal Cable (32-6662D)

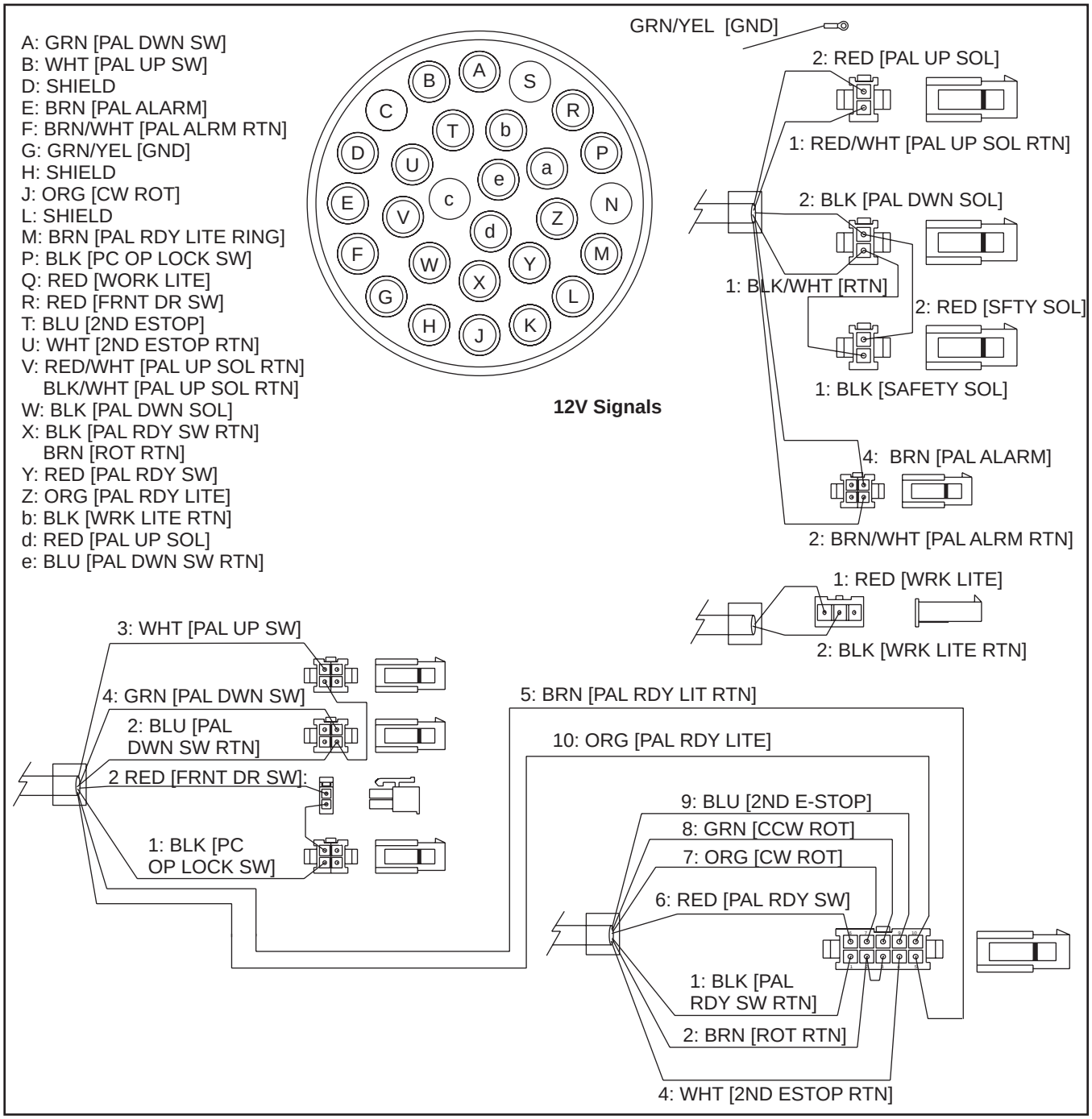

## Remote Jog Handle Encoder Cable (33-5755)

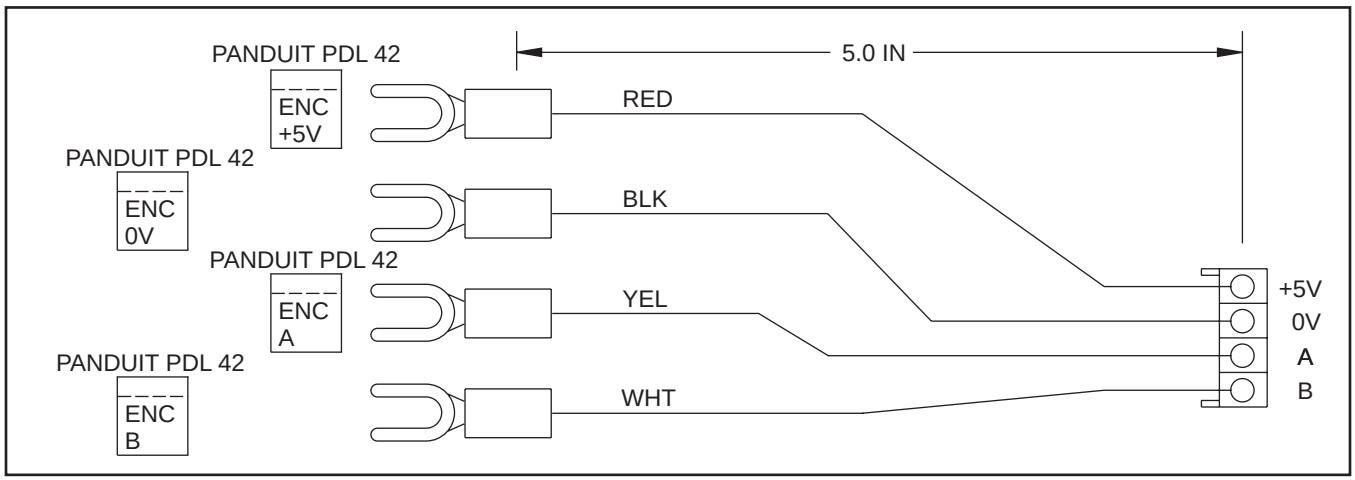


## Cable, CE/Key/2nd Home/Auto Door (33-6039A)

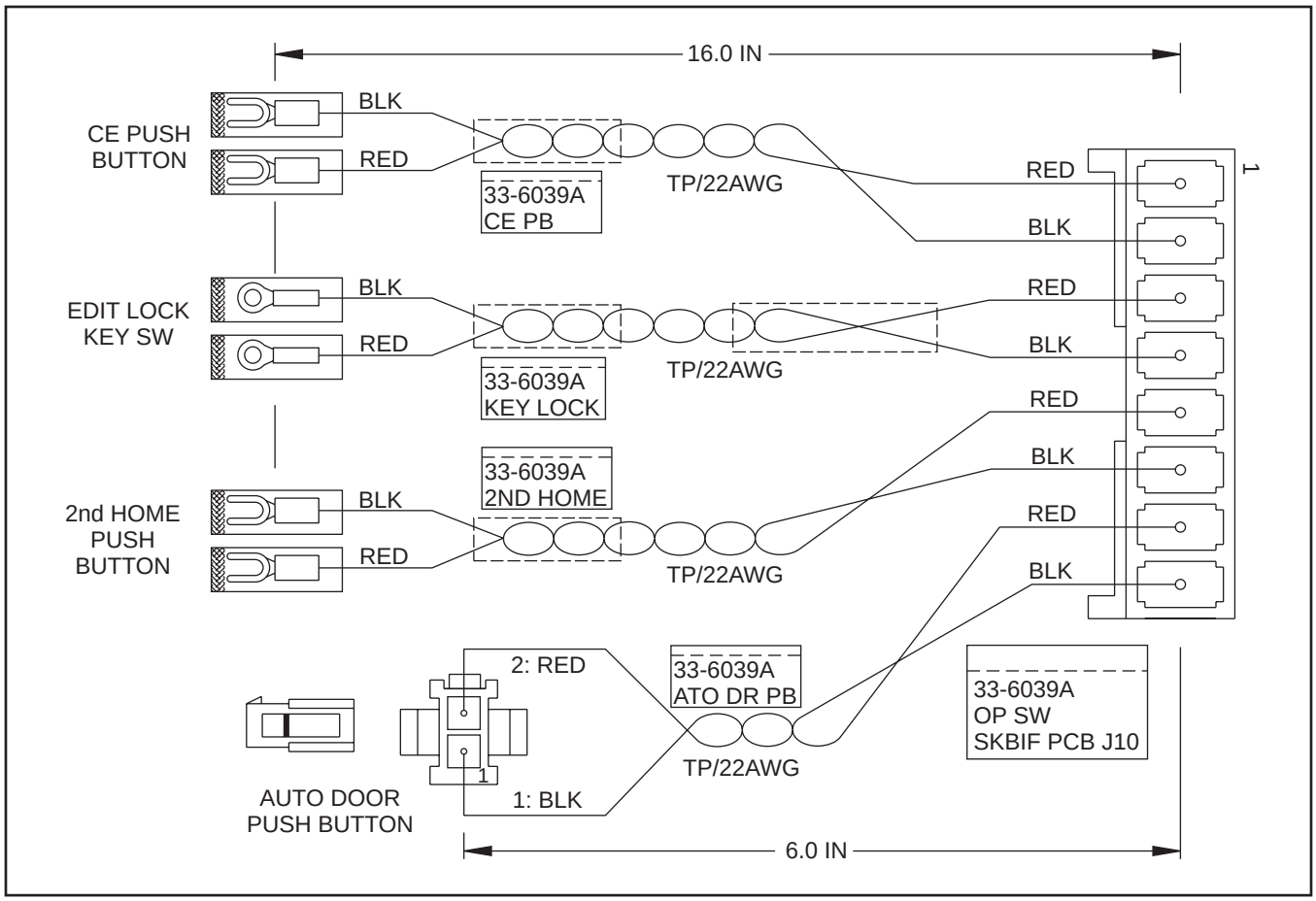

## Alarms

Any time an alarm is present, the lower left hand corner of the screen will have a blinking alarm. Push the ALARM display key to view the current alarm. All alarms are displayed with a reference number and a complete description. If the Reset key is pressed, one alarm will be removed from the list of alarms. If there are more than 18 alarms, only the last 18 are displayed and the Reset must be used to see the rest. The presence of any alarm will prevent the operator from starting a program.

The **Alarms Display** can be selected at any time by pressing the Alarm Mesgs button. When there are no alarms, the display will show No Alarm. If there are any alarms, they will be listed with the most recent alarm at the bottom of the list. The Cursor and Page Up and Page Down buttons can be used to move through a large number of alarms. Cursor **right** and **left** buttons can be used to turn on and off the Alarm history display.

Note that tool changer alarms can be easily corrected by performing a tool changer recovery. First, correct any mechanical problem, press Reset until the alarms are clear, select Zero Ret mode, and select Auto All Axes. Some messages are displayed while editing to tell the operator what is wrong, but these are not alarms.

The following alarm list shows alarm numbers, text displayed along with the alarm, and a detailed description of the alarm, what can cause it, when it can happen, and how to correct it. If alarm numbers have different meanings between lathes and mills, it is indicated with a **(L)** or a **(M)** directly after the alarm number or wording to which the text pertains. **(L)** and **(M)** do not appear in the alarm numbers on the machine display.

**100** - NO ALARM

**101 MOCON COMM. FAILURE** - A self-test of communications between the MoCon and Main Processor failed. This can be caused by a software error or a hardware failure. Check the software release notes. Check cable/power connections and re-seat or replace address and data bus cables. This alarm can also be caused by a MoCon memory fault. Check status lights.

**102 SERVOS OFF** - Indicates that the servo motors are off, the tool changer is disabled, the coolant pump is off, and the spindle motor is stopped. Caused by Emergency Stop, motor fault, or power failure. Will also appear upon start up of machine as an informative alarm. Press RESET to power servos on.

**103 X SERVO ERROR TOO LARGE** - Load on X-axis Servomotor has exceeded parameter 9 X-axis Max Error. Servos are turned off and you must push RESET to clear the alarm and turn on the servos. Dull cutting tools or an incorrect program is exceeding the Max Load for this axis. Lathe: Servo brake on X axis motor may not be disengaging. 24VDC is needed to release brake. Servo brake power is supplied from Trans/Brake PCB P5/P9, or on I/O PCB P78/P79 when servos are powered on. Verify power to hydraulic card.

**104 Y SERVO ERROR TOO LARGE** - Load on Live Tool Servomotor has exceeded parameter 23 Y-axis Max Error. Servos are turned off and you must push RESET to clear the alarm and turn on the servos. Dull cutting tools or an incorrect program is exceeding the Max Load for this axis. Horizontal mill: Servo brake may not be disengaging. 24VDC is needed to release brake. Power for servo brake is supplied from Trans/Brake PCB P5/P9, or on I/O PCB P78/P79 when servos are powered on. Verify power to AMP +/- 12 325VDC Buss.

**105 Z SERVO ERROR TOO LARGE** - Load on Z-axis Servomotor has exceeded parameter 37 Z-axis Max Error. Servos are turned off and you must push RESET to clear the alarm and turn on the servos. Dull cutting tools or an incorrect program is exceeding the Max Load for this axis. **Vertical mill**: Servo brake may not be disengaging. 24VDC is needed to release brake. Power for servo brake is supplied from Trans/Brake PCB P5/P9, or on I/O PCB P78/P79 when servos are powered on. Verify power to AMP +/- 12 325VDC Buss.

**106 A SERVO ERROR TOO LARGE** - Load on the A-axis Servomotor has exceeded parameter 51 A-axis Max Error. The servos will be turned off and you must push RESET to clear the alarm and turn on the servos. This is the Turret Index Servo; this alarm indicates that there is a problem with the Turret. The Turret may have hit something while trying to index, or a mechanical problem that prevents normal movement may have occurred. Verify power to AMP +/- 12 325VDC Buss.

**Lathe:** Turret may need motor coupling adjustment (See mechanical service manual for details). Turret may have rotated before being completely unclamped. Check adjustment of Turret Locked/Unlocked switches.

**107 EMERGENCY OFF** - Emergency Stop button was pressed. Servos are also turned off. After the E-Stop is released, the Reset button must be pressed at least twice to correct this; once to clear the E-Stop alarm and once to clear the Servo Off alarm. This alarm will also be generated if there is a low pressure condition in the hydraulic counterbalance system. In this case, the alarm will not reset until the condition has been corrected.

**108 X SERVO OVERLOAD** - The load limit on the X-axis Servo motor has been exceeded. Adjust your program to reduce the tool load placed on the X-axis. **Lathe:** Servo brake on X axis motor may not be disengaging. 24VDC is needed to release brake. Power for servo brake is supplied from Trans/Brake PCB P5/P9, or on I/O PCB P78/P79 when servos are powered on. Verify power to AMP +/- 12 325VDC Buss.

**109 Y SERVO OVERLOAD** - The load limit on the Y-Axis Servo motor has been exceeded. Adjust your program to reduce the tool load placed on the Live Tool Servo. **Horizontal mill:** Servo brake may not be disengaging. 24VDC is needed to release brake. Power for servo brake is supplied from Trans/Brake PCB P5/P9, or on I/O PCB P78/P79 when servos are powered on. Verify power to AMP +/- 12 325VDC Buss.

**110 Z SERVO OVERLOAD** - The load limit on the Z-axis Servo motor has been exceeded. Adjust your program to reduce the tool load placed on the Z-axis. **Vertical mill:** Servo brake may not be disengaging. 24VDC is needed to release brake. Power for servo brake is supplied from Trans/Brake PCB P5/P9, or on I/O PCB P78/P79 when servos are powered on. Verify power to AMP +/- 12 325VDC Buss.

**111 A SERVO OVERLOAD** - Excessive load on A-axis servo. Something is obstructing the turret; this is an indication that there is a problem with the Turret Index Servo. **Vertical mill with rotary:** Rotary brake system may not be releasing. Test brake system by temporarily disconnecting supplied air to brake. Verify correct rotary model is selected in setting `30. Verify rotary parameters are correct.

**112 NO INTERRUPT** - Electronics fault. No communication between processor and Mocon. Power failure can be verified if Status LED on Mocon blinks four times at power up. Test +12 / -12 VDC to Mocon PCB from LVPS.

**113 (L) TURRET UNLOCK FAULT** - The turret took longer to unlock and come to rotation position than allowed for in Parameter 62. The value in Parameter 62 is in milliseconds. This may occur if the air pressure is too low, the tool turret clamp switch is faulty or needs adjustment, or there is a mechanical problem.

**113 (M) SHUTTLE IN FAULT** - Tool changer is not completely to the right. During tool changer operation, the tool in/out shuttle failed to get to the in position. Parameters 62 and 63 can adjust the time-out times. Verify parameters 62 and 63 are set to Haas specifications. This alarm can be caused by anything that jams the motion of the slide, the presence of a tool in the pocket facing the spindle, incorrect spindle orientation or a loss of power to the tool changer. Check relays K9-K12 and fuse F1 on I/O PCB. Check the shuttle arm clutch for wear. Check shuttle motor for rotation during tool change. Check motor brushes and test for power at motor.

**114 (L) TURRET LOCK FAULT** - The turret took longer to lock and seat than allowed for in Parameter 63. The value in Parameter 63 is in milliseconds. This may occur if the air pressure is too low, the tool turret clamp switch is faulty or needs adjustment, or there is a mechanical problem. If the Turret has not rotated to the correct position, the motor coupling may need adjustment. Debris between the male and female turret couplings can prevent the turret from locking completely.

**114 (M) SHUTTLE OUT FAULT** - Tool changer is not completely to the left. During a tool changer operation the tool in/out shuttle failed to get to the out position. Parameters 62 and 63 can adjust the time-out times. Verify parameters 62 and 63 are set to Haas specifications. This alarm can be caused by anything that jams the motion of the slide, the presence of a tool in the pocket facing the spindle (not when moving away from the spindle), a loss of power to the tool changer. Check the shuttle arm clutch for wear. Check shuttle motor for rotation during tool change. Check motor brushes and test for power at motor. Check relays K9-K12 on and fuse F1 on I/O PCB.

Recover: Make sure shuttle is clear to move away from the spindle. Place something soft under the spindle to catch a tool, which may fall. Press ZERO RET, then ALL to manually move shuttle to the left.

**115 (L) TURRET ROTATE FAULT** - Tool motor not in position. During a tool changer operation the tool turret failed to start moving or failed to stop at the right position. Parameters 62 and 63 can adjust the time-out times. This alarm can be caused by anything that jams the rotation of the turret. A loss of power to the tool changer can also cause this, so check CB5, relays 1-8, 2-3, and 2-4.

**115 (M) TURRET ROTATE FAULT** - Tool carousel motor not in position. During a tool changer operation, the tool turret failed to start moving or failed to stop at the right position. Turret motor may have rotated too fast or too slow, causing the turret to stop in an incorrect position. Parameters 60 and 61 can adjust the time-out times. This alarm can be caused by anything that jams the rotation of the turret, or a loss of power to the tool changer. Check relays K9-K12 and fuse F1 on I/O PCB. Check turret motor brushes.

**116 SPINDLE ORIENTATION FAULT** - Spindle did not orient correctly. During a spindle orientation function, the spindle rotated but never achieved proper orientation. This can be caused by failure of encoder, cables, belts, MOCON or vector drive. Parameter 257 Spindle Orient Offset may not be set correctly, causing misalignment with toolchangers.

**117 SPINDLE HIGH GEAR FAULT** - Gearbox did not shift into high gear. During a change to high gear, the spindle is rotated slowly while air pressure is used to move the gears but the high gear sensor was not detected in time. Parameters 67, 70 and 75 can adjust the time-out times for troubleshooting only. Check the air pressure, the circuit breaker CB4 for the solenoids, and the spindle drive. In Diagnostics, check the status of discrete inputs Spindle Hi Gear and Spindle Low Gear. One bit should read 0, the other a 1, then the bits should change status when a gear change has completed.

**118 SPINDLE LOW GEAR FAULT** - Gearbox did not shift into low gear. During a change to low gear, the spindle is rotated slowly while air pressure is used to move the gears but the low gear sensor was not detected in time. Parameters 67, 70 and 75 can adjust the time-out times for troubleshooting only. Check the air pressure, the solenoid's circuit breaker CB4, and the spindle drive. In Diagnostics, check the status of discrete inputs Spindle Hi Gear and Spindle Low Gear. One bit should read 0, the other a 1, then the bits should change status when a gear change has completed.

**119 OVERVOLTAGE** - Incoming line voltage is above maximum. The servos are turned off and the spindle, tool changer, and coolant pump stop. If this condition persists, an automatic shutdown begins after the interval specified by Parameter 296. Under certain conditions, SMTC Recovery must be performed to clear the alarm. Incorrect power or loss of power to MOCON can also cause this alarm. For office machines and all other machines that use the 320V power supply, Parameter 315 bit 8 (Mini power supply) needs to be set to 1.

**120 LOW AIR PRESSURE** - Air pressure dropped below 80 psi for period defined by Parameter 76. The Low Air PR alarm appears on the screen as soon as the pressure gets low, and this alarm appears after some time has elapsed. Check your incoming air pressure for at least 100 psi and ensure that the regulator is set at 85 psi. Test the I/O by jumpering pins 1 to 3 on P12 and watch diagnostics bit Low Air Press. Under certain conditions, SMTC Recovery must be performed to clear the alarm.

**121 LOW LUBE OR LOW PRESSURE** - Way lube is low or empty or there is no lube pressure or too high a pressure. Check tank at rear of machine and below control cabinet. Also check connector on the side of the control cabinet. Check that the lube lines are not blocked. Test the lube pressure by manually operating the pump by hand and watching the oil pressure gauge. With a full stroke of the pump, the pressure should read 35-40psi and should drop gradually to zero between 8-10 minutes. The pressure switch should also change state when pump is cycled and its status can be viewed in diagnostics. Test the I/O by jumpering pins 1 to 2 on P13 and watch diagnostics.

**122 REGEN OVERHEAT** - The regenerative load temperature is above a safe limit. This alarm will turn off the servos, spindle drive, coolant pump, and tool changer. One common cause of this overheat condition is an input line voltage too high. If this condition persists, an automatic shutdown will begin after the interval specified by Parameter 297. It can also be caused by a high start/stop duty cycle of spindle.

**123 SPINDLE DRIVE FAULT** - Failure of spindle drive, motor or regen load. This can be caused by a shorted motor, overvoltage, overcurrent, undervoltage, failure of drive or shorted or open regen load. Undervoltage and overvoltage of DC bus are also reported as alarms 160 and 119, respectively

**124 LOW BATTERY** - Memory battery needs replacing within 30 days. This alarm is only generated at power on and indicates that the 3V Lithium battery is below 2 volts. If this is not corrected within about 30 days, you may lose your stored programs, parameters, offsets, and settings. Back up memory before replacing the battery as follows: Mill version 15 software and Lathe version 8 or earlier: Go to the position page, type a file name, then press F2 to save parameters, offsets, and settings onto a floppy or USB device. Mill 16 and Lathe 9 or later: Go to List Programs, select the USB Device or NET drive tab, press F4, highlight Save All- Back Up, and press Write/Enter.

**125 (L) TOOL TURRET FAULT** - Turret has not seated itself properly. There may be something obstructing the turret between the housing and the turret itself.

**125 (M) SHUTTLE FAULT** - Tool shuttle not initialized at power on, Cycle Start, or spindle motion command. This means that the tool shuttle was not fully retracted to the Out position. The shuttle In/Out switches may not be functioning normally. This alarm can be caused by anything that jams the motion of the slide, a loss of power to the tool changer. Check the shuttle arm clutch for wear. Check shuttle motor for rotation. Check motor brushes and test for power at motor. Check relays K9-K12 on and fuse F1 on I/O PCB.

**126 GEAR FAULT** - Gearshifter is out of position when a command is given to start a program or rotate the spindle. This means that the two speed gear box is not in either high or low gear but is somewhere in between. Check the air pressure, the solenoid's circuit breaker CB4, and the spindle drive. Use the Power Up/ Restart button to correct the problem.

**127 (L) DOOR FAULT** - The machine has detected a problem with the Auto Door. The door either did not Close or Open as commanded. An obstruction or a faulty proximity switch can cause this.

**127 (M) NO TURRET MARK** - Tool carousel motor not in position. The Auto All Axes button will correct this, but be sure afterwards that the pocket facing the spindle does not contain a tool. M39 can be used to command the turret to rotate if the pocket facing the spindle contains a tool.

**128 (M) SUPER TRAVEL ENABLED ON MULTIPLE AXES** - Two or more axes are enabled for super travel. Only one axis is allowed super travel capability. Super travel is enabled when a tool change offset parameter is greater than or less than normal travel limits. Check the Zero Axis TC, Max Travel, and Tool Change Offset parameter values for the X and Y axes.

**129 M FIN FAULT** - M-Fin was active at power on. Check the wiring to your M code interfaces. This test is only performed at power-on. Parameter 734 bit M-CODE FINISH may be inverted.

**130 (L) CHUCK UNCLAMPED** - The Cycle Start Button was push while the chuck was unclamped. Clamp the Chuck and Re-Start the cycle. Check setting #92 for proper chuck clamping.

**130 (M) TOOL UNCLAMPED** - The tool appeared to be unclamped during spindle orientation, a gear change, a speed change, or TSC start-up. The alarm is also generated if the tool release piston is energized during Power Up. This can be caused by incorrect TRP switch function or adjustment, an air solenoid fault, relays on the I/O assembly, draw bar assembly, or the wiring.

**131 (M) TOOL NOT CLAMPED** - When clamping or powering up the machine, the Tool Release Piston is not Home. Check TRP switches for correct operation and adjustment. There is a possible fault in the air solenoids, relays on the I/O Assembly, drawbar assembly, or wiring.

**132 POWER DOWN FAILURE** - Machine did not turn off when an automatic power-down was commanded. Check wiring to Power Interface (POWIF) card on power supply assembly, relays on the I/O assembly, and the main contact K1.

**133 (L) SPINDLE BRAKE ENGAGED** - The Spindle was commanded to start while the spindle was clamped (M14) correct your part program (M15) to unclamp the spindle.

**133 (M) SPINDLE INOPERATIVE** - Spindle does not respond when spindle motion is commanded. This can be caused by failure of encoder, cables, belts, MOCON, or vector drive.

**134 (L) LOW HYDRAULIC PRESSURE** - Hydraulic pressure is sensed to be low or has not come up to pressure within the time allowed in parameter 222. Check pump pressure and hydraulic tank oil level. Verify proper pump and machine phasing. Also check 3-phase power phasing. Phase detector on power card should have green light under PASS when machine is powered up.

**134 (M) TOOL CLAMP FAULT** - While unclamping, the tool did not release from spindle when commanded. Check air pressure, solenoid circuit breaker CB4, and for maladjustment of the draw bar assembly.

**135 X-AXIS MOTOR OVERHEAT** - Servo motor overheat. The temperature sensor in the motor indicates over 150° F (65° C). This can be caused by an extended overload of the motor; such as leaving the slide at the stops for several minutes.

**136 Y-AXIS MOTOR OVERHEAT** - Servo motor overheat. The temperature sensor in the motor indicates over 150° F (65° C). This can be caused by an extended overload of the motor; such as leaving the slide at the stops for several minutes.

**137 Z-AXIS MOTOR OVERHEAT** - Servo motor overheat. The temperature sensor in the motor indicates over 150° F (65° C). This can be caused by an extended overload of the motor; such as leaving the slide at the stops for several minutes.

**138 A-AXIS MOTOR OVERHEAT** - Servo motor overheat. The temperature sensor in the motor indicates over 150° F (65° C). This can be caused by an extended overload of the motor; such as leaving the slide at the stops for several minutes. (Mill) Check parameter 43 bit OVER TEMP NC. Make sure the correct model rotary has been selected in setting 30.

**139 X-AXIS MOTOR Z FAULT** - Encoder marker pulse count failure. This alarm usually means that the encoder has been damaged and encoder position data is unreliable. It can also be caused by damaged motor cable or a loose encoder cable connection on motor or encoder input on the Mocon PCB.

**140 Y-AXIS MOTOR Z FAULT** - Encoder marker pulse count failure. This alarm usually means that the encoder has been damaged and encoder position data is unreliable. It can also be caused by damaged motor cable or a loose encoder cable connection on motor or encoder input on the Mocon PCB.

**141 Z-AXIS MOTOR Z FAULT** - Encoder marker pulse count failure. This alarm usually means that the encoder has been damaged and encoder position data is unreliable. It can also be caused by damaged motor cable or a loose encoder cable connection on motor or encoder input on the Mocon PCB.

**142 A-AXIS MOTOR Z FAULT** - Encoder marker pulse count failure. This alarm usually means that the encoder has been damaged and encoder position data is unreliable. It can also be caused by damaged motor cable or a loose encoder cable connection on motor or encoder input on the Mocon PCB. (Mill) Check A-axis cable connection on side of electrical cabinet.

**143 (L) SPINDLE ORIENTATION LOST** - Spindle orientation lost during a fine spindle control motion. This can be caused by failure of encoder, cables, belts, MOCON, or vector drive. It can also be caused by failure to orient spindle prior to G05, Fine Spindle Control Motion. Be sure to run M19 before G05.

**143 (M) SPINDLE ORIENTATION LOST** - Spindle orientation lost during a tool change operation. This can be caused by failure of encoder, cables, belts, MOCON, or vector drive.

**144 TIMEOUT - CALL YOUR DEALER** - Time allocated for use prior to payment exceeded. Call your dealer.

**145 X LIMIT SWITCH** - Axis hit limit switch or switch disconnected. Home switch input changed state while machine was in use. Stored stroke limits should stop the slides before they hit the limit switches. Verify the value of Parameter 125, Grid Offset, and check the wiring to the limit switch. Can also be caused by a loose encoder shaft at the back of the motor or coupling of motor to the screw. X limit switch may need replacement.

**146 Y LIMIT SWITCH** - Live Tooling hit limit switch or switch disconnected. Home switch input changed state while machine was in use. Stored stroke limits should stop slides before they hit the limit switches. Verify the value of Parameter 126, Grid Offset, and check the wiring to the limit switch. Can also be caused by a loose

encoder shaft at the back of the motor or coupling of motor to the screw. Y limit switch may need replacement.

**147 Z LIMIT SWITCH** - Axis hit limit switch or switch disconnected. Home switch input changed state while machine was in use. Stored stroke limits should stop the slides before they hit the limit switches. Verify the value of Parameter 127, Grid Offset, and check the wiring to the limit switch. Can also be caused by a loose encoder shaft at the back of the motor or coupling of motor to the screw. Z limit switch may need replacement.

**148 A LIMIT SWITCH** - Normally disabled for rotary axis.

**149 (L) SPINDLE TURNING** - The machine has detected that the spindle is still turning when it expects it to be stopped. This is most likely cause by an incorrect parameter setting. Call your dealer for assistance correcting this problem.

**149 (M) SPINDLE TURNING** - A signal from spindle drive indicating that 'spindle drive is stopped' is not present while a tool change operation is going on.

**150 (L) I_MODE OUT OF RANGE** - Cycle power on the machine. If the alarm reoccurs, call your dealer and report the sequence of events that led to the alarm.

**150 (M) Z AND TOOL INTERLOCKED** - Tool changer not at home and either the Z or A or B axis (or any combination) is not at machine zero position. If RESET, E-STOP, or POWER OFF occurs during tool change, Z-axis motion and tool changer motion may not be safe. Check the position of the tool changer and remove the tool if possible. Re-initialize with the AUTO ALL AXES button but be sure that the pocket facing the spindle afterwards does not contain a tool. For machines initialized as VR parameters 212 and 213 tool change offset need to be set and parameters 269 and 270 Bit 4 both need to be 1 for a tool change to occur without this alarm. This alarm can occur after a software upgrade with incorrect parameters.

**151 (L) HPC LOW PRESSURE** - A low coolant pressure condition has been detected. To disable this alarm, set Parameter 209 Common Switch 2 DSBL CLNT IN to 1.

**151 (M) LOW THRU SPINDLE COOLANT** - For mills with Through the Spindle Coolant only. This alarm will shut off the coolant spigot, feed, and pump all at once. It will turn on purge, wait for the amount of time specified in Parameter 237, and then turn off the purge. Check for low coolant tank level, any filter or intake strainer clogging, or for any kinked or clogged coolant lines. Verify proper pump and machine phasing. If no problems are found with any of these, and none of the coolant lines are clogged or kinked, call your dealer.

**152 SELF TEST FAIL** - Control has detected an electronics fault. All motors and solenoids are shut down. This is most likely caused by a fault of the processor board stack at the top left of the control. Call your dealer.

**153 X AXIS Z CH MISSING** - Z Reference signal from encoder was not received as expected. All servos are turned off. Can be caused by loose connections, encoder contamination, or parameter error.

**154 Y AXIS Z CH MISSING** - Z Reference signal from encoder was not received as expected. All servos are turned off. Can be caused by loose connections, encoder contamination, or parameter error.

**155 Z AXIS Z CH MISSING** - Z Reference signal from encoder was not received as expected. All servos are turned off. Can be caused by loose connections, encoder contamination, or parameter error.

**156 A AXIS Z CH MISSING** - Z Reference signal from encoder was not received as expected. Can be caused by loose connections, encoder contamination, or parameter error.

**157 MOCON WATCHDOG FAULT** - The self-test of the MOCON has failed. Call your dealer. Test +12, -12, and +5 volt power at MOCON PCB. Unreliable power from LVPS can cause this alarm. Check alarm history for Axis Drive Faults. A faulty axis driver can cause fluctuated or imbalanced low volt power to logic stack. Problem may be caused by a shorted coolant level sensor, voltage sensor from vector drive, or thermocouple sensor from X-axis ballscrew (lathe). Disconnecting cables, one at a time, on P34, P26, P27, P28, P17, P21, and P22, may isolate the problem.

**158 VIDEO/KEYBOARD PCB FAILURE** - During power-on tests, the control has detected a problem in either the keyboard or the video memory. Call your dealer.

**159 KEYBOARD FAILURE** - Keyboard shorted or button pressed at power on. A power-on test of the membrane keypad has found a shorted button. It can also be caused by a short in the cable from the main cabinet or by holding a switch down during power-on.

**160 LOW VOLTAGE** - The line voltage to machine is too low. Line voltage to machine is more than 10% lower than the expected nominal value..

**161 X AXIS DRIVE FAULT** - Current in X servo motor beyond limit. Possibly caused by a stalled or overloaded motor. The servos are turned off. Can be caused by running the axis into a mechanical stop, a short in the motor, or a short of one motor lead to ground.

**162 Y AXIS DRIVE FAULT** - (L) Current in Live Tooling servo motor beyond limit, (M) Current in Y servo motor beyond limit. Possibly caused by a stalled or overloaded motor. The servos are turned off. Can be caused by running the axis into a mechanical stop, a short in the motor, or a short of one motor lead to ground.

**163 Z AXIS DRIVE FAULT** - Current in Z servo motor beyond limit. Possibly caused by a stalled or overloaded motor. The servos are turned off. Can be caused by running the axis into a mechanical stop, a short in the motor, or a short of one motor lead to ground.

**164 A AXIS DRIVE FAULT** - Current in A servo motor beyond limit. Possibly caused by a stalled or overloaded motor. The servos are turned off. Can be caused by running the axis into a mechanical stop, a short in the motor, or a short of one motor lead to ground.

**165 X ZERO RET MARGIN TOO SMALL** - This alarm will occur if the home/limit switches move or are misadjusted. It indicates that the zero return position may not be consistent from one zero return to the next. The encoder Z channel signal must occur between 1/8 and 7/8 revolution of where the home switch releases. This will not turn the servos off, but will stop the zero return operation. Check grid offset.

**166 Y ZERO RET MARGIN TOO SMALL** - This alarm will occur if the home/limit switches move or are misadjusted. It indicates that the zero return position may not be consistent from one zero return to the next. The encoder Z channel signal must occur between 1/8 and 7/8 revolution of where the home switch releases. This will not turn the servos off, but will stop the zero return operation. Check grid offset.

**167 Z ZERO RET MARGIN TOO SMALL** - This alarm will occur if the home/limit switches move or are misadjusted. It indicates that the zero return position may not be consistent from one zero return to the next. The encoder Z channel signal must occur between 1/8 and 7/8 revolution of where the home switch releases. This will not turn the servos off, but will stop the zero return operation. Check grid offset.

**168 A ZERO RET MARGIN TOO SMALL** - This alarm will occur if the home/limit switches move or are misadjusted. It indicates that the zero return position may not be consistent from one zero return to the next. The encoder Z channel signal must occur between 1/8 and 7/8 revolution of where the home switch releases. This will not turn the servos off, but will stop the zero return operation. Check grid offset.

**169 SPINDLE DIRECTION FAULT** - Problem with rigid tapping hardware. The spindle started turning in the wrong direction.

**170(M) ENABLED AXIS NEEDS MOCON2** - An axis is enabled that has its MOCON channel parameter set to a channel on MOCON 2 but a MOCON 2 was not detected.

**171 (L) rpm TOO HIGH TO UNCLAMP** - The spindle speed exceeded the max speed allow in Parameter 248 to unclamp. Reduce the speed of the spindle to a value less than or equal to Parameter 248.

**171 (M) APC-PALLET CLAMP TIMEOUT** - The pallet in the mill did not clamp in the time allowed. Check for foreign objects under the pallet and between the pallet and the clamp plate. Verify an adequate supply of air pressure and volume. Check air solenoids for sticking and air release ports for clogging. Check pallet position switch for correct operation, the switch and wiring for damage, and pallet alignment. Check the pallet clamp mechanism for correct operation. After determining cause and correcting problem, run M50 P1 in MDI to recover the pallet changer and continue operation. Parameter 320 specifies the pallet clamp timeout period.

**172 (L) DOOR IS OPEN AND SPINDLE IS TURNING** - The chuck is not allowed to unclamp while the door is open and the spindle is on.

**172 (M) APC-PALLET UNCLAMP TIMEOUT** - The pallet in the mill did not unclamp in the time allowed. Check for foreign objects between the pallet and the clamp plate. Verify there is an adequate supply of air pressure and air volume. Check air solenoids for sticking and air release ports for clogging. Check the pallet position switch for correct operation, the switch and wiring for damage and pallet alignment. Check the pallet clamp plate for damage. After determining the cause and correcting the problem, run M50 P1 in MDI to recover the pallet changer and then continue operation. Parameter 321 specifies the unclamp timeout period.

**173 SPINDLE ENCODER Z CH MISSING** - The Z channel pulse from the spindle encoder is missing for rigid tapping synchronization.

**174 (L) TOOL LOAD EXCEEDED** - The tool load limit is set and the load limit for a tool was exceeded in a feed. Reset the tool load limits in current commands for Spindle loads.

**174 (M) TOOL LOAD EXCEEDED** - The tool load limit is set and the load limit for a tool was exceeded in a feed. Reset the tool load limits in current commands for Spindle loads.

**175 GROUND FAULT DETECTED** - A ground fault condition was detected in the 115V or 230V AC supply. This can be caused by a short to ground in any of the servo motors, the tool change motors, the fans, or the oil pump.

**176 OVERHEAT SHUTDOWN** - An overheat condition persisted longer than the interval specified by Parameter 297 and caused an automatic shutdown.

**177 OVERVOLTAGE SHUTDOWN** - An overvoltage condition persisted longer than the interval specified by Parameter 296 and caused an automatic shutdown.

**178 DIVIDE BY ZERO** - There are some parameters that are used as a divisor and therefore must never be set to zero. If the problem cannot be corrected by parameters, cycle power on the machine. If the alarm reoccurs, call your dealer and report the sequence of events that led to the alarm.

**179 LOW PRESSURE TRANS OIL** - Transmission oil is low or low pressure condition in oil lines.

**180 (M) PALLET/FIXTURE NOT CLAMPED** - Pallet/Fixture clamped input indicates pallet or fixture is not clamped and it is unsafe to run the spindle, jog an axis, or start a part program by pressing Cycle Start. It could also mean that a previous pallet change was incomplete and the pallet changer needs to be recovered. EC-300: Make sure there is no debris obstructing pallet clamp assy. The pallet clamp switch assembly may need servicing. The switch assembly is located under the pallet, behind the clamp plate. EC-400/500: The machine gets this alarm at beginning of a program if there is no pallet on the receiver. Check for debris between pallet and receiver. Check air pressure. Test switches at rotary union located under receiver. VFAPC: Alarm occurs when the spindle is commanded, but the pallet is unclamped. E-Stop may have been pressed during a pallet change. Run an M50 to reset the pallet changer. Pallet clamp switch may need servicing.

**181 MACRO NOT COMPLETED - SPINDLE DISABLED** - Macro code operating Haas optional equipment (bar feeder, etc.) was not completed (E-Stop, Reset, Power Down, etc.). Check optional equipment and run recovery procedure.

**182 X CABLE FAULT** - Cable from (axis) encoder does not have valid signals, incorrect motor selection, faulty cable, faulty connections or faulty motor. Check parameters to be sure that the mocon channel and encoder type parameters are correctly set. Check encoder cable connections at the mocon and motor. Check Cable. Check motor.

**183 (L) LIVE TOOLING CABLE FAULT** - Cable from (axis) encoder does not have valid signals, incorrect motor selection, faulty cable, faulty connections or faulty motor. Check parameters to be sure that the mocon channel and encoder type parameters are correctly set. Check encoder cable connections at the mocon and motor. Check Cable. Check motor.

**183 (M) Y CABLE FAULT** - Cable from (axis) encoder does not have valid signals, incorrect motor selection, faulty cable, faulty connections or faulty motor. Check parameters to be sure that the mocon channel and encoder type parameters are correctly set. Check encoder cable connections at the mocon and motor. Check Cable. Check motor.

**184 Z CABLE FAULT** - Cable from (axis) encoder does not have valid signals, incorrect motor selection, faulty cable, faulty connections or faulty motor. Check parameters to be sure that the mocon channel and encoder type parameters are correctly set. Check encoder cable connections at the mocon and motor. Check Cable. Check motor.

**185 A CABLE FAULT** - Cable from (axis) encoder does not have valid signals, incorrect motor selection, faulty cable, faulty connections or faulty motor. Check parameters to be sure that the mocon channel and encoder type parameters are correctly set. Check encoder cable connections at the mocon and motor. Check Cable. Check motor.

**186 SPINDLE NOT TURNING** - The spindle is not turning; check your program for G99 Feed Per Revolution or G98 Feed Per Minute.

**187 (L) B SERVO ERROR TOO LARGE** - Too much load or speed on B-axis motor. The difference between the motor position and the commanded position has exceeded a parameter. The motor may also be stalled, disconnected, or the driver failed. The servos will be turned off and a Reset must be done to restart. This alarm can be caused by problems with the driver, motor, or the slide being run into the mechanical stops.

**187 (M) B SERVO ERROR TOO LARGE** - Too much load or speed on B-axis motor. The difference between the motor position and the commanded position has exceeded Parameter 159. The motor may also be stalled, disconnected, or the driver failed. The servos will be turned off and a Reset must be done to restart. This alarm can be caused by problems with the driver, motor, or the slide being run into the mechanical stops. On machines with servo based tool changer chains, the chain was unable to move. On Machines with servo based tool changer arms, the arm was unable to move, possibly due to a stuck tool.

**188 B SERVO OVERLOAD** - Excessive load on B-axis motor. This can occur if the load on the motor over a period of several seconds or even minutes is large enough to exceed the continuous rating of the motor. The servos will be turned off when this occurs. This can be caused by running into the mechanical stops but not much past them. It can also be caused by anything that causes a very high load on the motors.

**189 B-AXIS MOTOR OVERHEAT** - Servo motor overheat. The motor's temperature sensor indicates over 150° F. This can be caused by an extended overload of the motor; such as leaving the slide at the stops for several minutes.

**190 B MOTOR Z FAULT** - Encoder marker pulse count failure. It usually indicates that the encoder has been damaged and encoder position data is unreliable. This can also be caused by loose encoder connectors.

**191 B LIMIT SWITCH** - Normally disabled for rotary axis.

**192 B AXIS Z CH MISSING** - Z reference signal from encoder was not received as expected. Can be caused by loose connections, encoder contamination, or parameter error.

**193 B AXIS DRIVE FAULT** - Current in B servo motor beyond limit. Possibly caused by a stalled or overloaded motor. The servos are turned off. Running the axis into a mechanical stop can cause this. A short in the motor or a short of one motor lead to ground can also cause it.

**194 B ZERO RET MARGIN TOO SMALL** - This alarm will occur if the home/limit switches move or are misadjusted. This alarm indicates that the zero return position may not be consistent from one zero return to the next. The encoder Z channel signal must occur between 1/8 and 7/8 revolution of where the home switch releases. This will not turn the servos off but will stop the zero return operation.

**195 B CABLE FAULT** - Cable from (axis) encoder does not have valid signals, incorrect motor selection, faulty cable, faulty connections or faulty motor. Check parameters to be sure that the mocon channel and encoder type parameters are correctly set. Check encoder cable connections at the mocon and motor. Check Cable. Check motor.

**196 (M) COOLANT SPIGOT FAILURE** - Spigot failed to achieve commanded location after two (2) attempts.

**197 MISC. SOFTWARE ERROR** - This alarm indicates an error in the control software. Call your dealer and report this problem.

**198 (L) SPINDLE STALLED** - Control senses that no spindle fault has occurred; the spindle is at speed, yet the spindle is not turning. Possibly the belt between the spindle drive motor and spindle has slipped or is broken.

**198 (M) PRECHARGE FAILURE** - During TSC operation, the precharge failed for greater than 0.1 seconds. It will shut off the feed, spindle and pump all at once. Check all air lines and the air supply pressure. Also check 3-phase power phasing.

**199 NEGATIVE RPM** - A negative spindle RPM was entered. Spindle speed commands must always be a positive value.

**200 VD OVER TEMP.** - Vector drive over temperature. The Vector Drive's temperature sensor indicates over 90°C (194° F) near the bridge rectifier. This can be caused by an extended overload condition of the Vector Drive, a stopped fan or high room temperature. Check the fan to ensure it is working.

**201 PARAMETER CRC ERROR** - The power-on consistency check of parameter memory failed. This can happen after a software update. It can also be a symptom of a software problem. Change a parameter value, then change it back. This will recalculate the CRC. If this alarm returns contact your dealer to see if there is a new version of software that fixes this problem.

**202 SETTING CRC ERROR** - The power-on consistency check of setting memory failed. This can happen after a software update. It can also be a symptom of a software problem. Change a parameter value, then change it back. This will recalculate the CRC. If this alarm returns contact your dealer to see if there is a new version of software that fixes this problem.

**203 LEAD SCREW CRC ERROR** - The power-on consistency check of Lead Screw Comp Table memory failed. This can happen after a software update. It can also be a symptom of a software problem. Change an Lead Screw Comp Table entry, then change it back. This will recalculate the CRC. If this alarm returns contact your dealer to see if there is a new version of software that fixes this problem. Lead Screw Comp Tables can be viewed by pressing PARAM DGNOS, then END, then <DOWN ARROW>. Take note of comp tables. Are any numbers entered? Corrupted Comp tables can be cleared, if needed, by pressing 0, then ORIGIN. Arrow down to Y and Z tables and clear them as well.

**204 OFFSET CRC ERROR** - The power-on consistency check of offset memory failed. This can happen after a software update. It can also be a symptom of a software problem. Change an offset value, then change it back. This will recalculate the CRC. If this alarm returns contact your dealer to see if there is a new version of software that fixes this problem.

**205 PROGRAMS CRC ERROR** - The power-on consistency check of program memory failed. This can happen after a software update. It can also be a symptom of a software problem. Edit a program. This will recalculate the CRC. If this alarm returns contact your dealer to see if there is a new version of software that fixes this problem.

**206 INTERNAL PROG ERROR** - Possible corrupted program. Save all programs to disk, delete all, then reload.

**207 QUEUE ADVANCE ERROR** - Cycle power on the machine. If the alarm reoccurs, call your dealer and report the sequence of events that led to the alarm.

**208 QUEUE ALLOCATION ERROR** - Cycle power on the machine. If the alarm reoccurs, call your dealer and report the sequence of events that led to the alarm.

**209 QUEUE CUTTER COMP ERROR** - Cycle power on the machine. If the alarm reoccurs, call your dealer and report the sequence of events that led to the alarm.

**210 INSUFFICIENT MEMORY** - Not enough memory to load user program. Check the space available in the LIST PROG and delete or download some programs to free memory.

**211 ODD PROG BLOCK** - Possible corrupt program. Save all programs to disk, delete all, and then reload.

**212 PROG INTEGRITY ERROR** - Possible corrupted program. Save all programs to disk, delete all, then reload.

**213 PROGRAM RAM CRC ERROR** - Electronics fault; possibly with main processor. Call your dealer.

**214 NO. OF PROGRAMS CHANGED** - Indicates that the number of programs disagrees with the internal variable that keeps count of the loaded programs. Possible processor problem, if this persists call your dealer. This can happen when extended memory is turned on.

**215 FREE MEMORY PTR CHANGED** - Indicates amount of memory used by programs counted in system disagrees with variable that points to free memory. Possible processor board problem. Call your dealer.

**216 (L) PROBE ARM DOWN WHILE RUNNING** - Indicates probe arm pulled down while running a program.

**216 (M) EPROM SPEED FAILURE** - Possible processor board problem.

**217 X PHASING ERROR** - Error occurred in phasing initialization of brushless motor. This can be caused by a bad encoder, or a cabling error. Call your dealer.

**218 Y PHASING ERROR** - Error occurred in phasing initialization of brushless motor. This can be caused by a bad encoder, or a cabling error.

**219 Z PHASING ERROR** - Error occurred in phasing initialization of brushless motor. This can be caused by a bad encoder, or a cabling error.

**220 A PHASING ERROR** - Error occurred in phasing initialization of brushless motor. This can be caused by a bad encoder, or a cabling error.

**221 B PHASING ERROR** - Error occurred in phasing initialization of brushless motor. This can be caused by a bad encoder, or a cabling error.

**222 C PHASING ERROR** - Error occurred in phasing initialization of brushless motor. This can be caused by a bad encoder, or a cabling error.

**223 DOOR LOCK FAILURE** - The door opened when it was commanded locked. This can occur if the door was not fully closed when the lock engaged.

**224 X TRANSITION FAULT** - Illegal transition of encoder count pulses in X-axis. This alarm usually indicates that the encoder has been damaged and encoder position data is unreliable. This can also be caused by loose connectors at the MOCON PCB.

**225 Y TRANSITION FAULT** - Illegal transition of encoder count pulses in Live Tooling. This alarm usually indicates that the encoder has been damaged and encoder position data is unreliable. This can also be caused by loose connectors at the MOCON PCB.

**226 Z TRANSITION FAULT** - Illegal transition of encoder count pulses in Z-axis. This alarm usually indicates that the encoder has been damaged and encoder position data is unreliable. This can also be caused by loose connectors at the MOCON PCB.

**227 A TRANSITION FAULT** - Illegal transition of encoder count pulses in A-axis. This alarm usually indicates that the encoder has been damaged and encoder position data is unreliable. This can also be caused by loose connectors at the MOCON PCB.

**228 B TRANSITION FAULT** - Illegal transition of count pulses in B-axis. This alarm usually indicates that the encoder has been damaged and encoder position data is unreliable. This can also be caused by loose connectors at the MOCON PCB.

**229 C TRANSITION FAULT** - Illegal transition of count pulses in C-axis. This alarm usually indicates that the

encoder has been damaged and encoder position data is unreliable. This can also be caused by loose connectors at the MOCON PCB.

**230 (L) DOOR OPEN** - Spindle rpm has exceeded max value in Parameter 586 while the door is open. Stop the spindle, close the door, or lower spindle rpm to a value less than or equal to the value of Parameter 586.

**231 JOG HANDLE TRANSITION FAULT** - Illegal transition of count pulses in jog handle encoder. This alarm usually indicates that the encoder has been damaged and encoder position data is unreliable. This can also be caused by loose connectors.

**232 SPINDLE TRANSITION FAULT** - Illegal transition of count pulses in spindle encoder. This alarm usually indicates that the encoder has been damaged and encoder position data is unreliable. This can also be caused by loose connectors at the MOCON.

**233 JOG HANDLE CABLE FAULT** - Cable from jog handle encoder does not have valid differential signals.

**234 SPINDLE ENCODER CABLE FAULT** - Cable from spindle encoder does not have valid differential signals.

**235 SPINDLE Z FAULT** - Encoder marker pulse count failure. This alarm usually indicates that the encoder mounted on the spindle has been damaged and encoder position data is unreliable. Loose encoder connectors at P1-P4 can also cause this.

**236 SPINDLE MOTOR OVERLOAD** - The spindle motor is overloaded.

**237 SPINDLE FOLLOWING ERROR** - The error between the commanded spindle speed and the actual speed has exceeded the maximum allowable (as set in Parameter 184).

**238 (M) AUTOMATIC DOOR FAULT** - The automatic door was commanded to operate, but did not complete the operation. The door was:

1) Commanded to close but failed to contact the closed switch in the time allowed.

2) Commanded to open but failed to contact opened switch (not all doors have switch) in time allowed.

3) Commanded to open but did not begin moving in the time allowed.

Check door switch, door for mechanical binding, and that the door motor and clutch are functioning correctly.

**239 UNKNOWN MOCON1 ALARM** - Mocon has reported an alarm to the current software. The current version of software was unable to identify the alarm. Check for loose MOCON cable connections. See MOCON software release notes for additional diagnostics.

**240 EMPTY PROG OR NO EOB** - DNC program not found or no end of program found. Program structure isn't correct, there needs to be a % at the beginning or end of file. The program must have a program number beginning with the letter "O". Possible electrical noise effecting data transfer.

**241 INVALID CODE** - RS-232 load was bad. Data was stored as comment. Check the program received. The erroneous data will be placed on the MESSAGES page as a comment with trailing question mark. Invalid code will be visible in program as a comment with a trailing question mark.

**242 NUMBER FORMAT ERROR-OR TOO LONG** - Check input file for an improperly formatted number. Number may have too many digits or multiple decimal points. The erroneous data will be placed on the MESSAGES page as a comment with trailing question mark.

**243 BAD NUMBER** - Data entered is not a number.

**244 MISSING (...)** - Comments must begin '(' and end with a ')'. This alarm also occurs with a comment greater than 80 characters long. The erroneous data is placed on the MESSAGES page as a comment with trailing question mark. The offending blocks may also be visible in the program as a comment, search for (?).

**245 UNKNOWN CODE** - Check input line or data from RS-232. Alarm can occur while editing data into a pro-

gram or loading from RS-232. The erroneous data will be placed on the MESSAGES page as a comment with trailing question mark. Offending blocks may also be visible in the program as a comment, search for (?).

**246 STRING TOO LONG** - Input line is too long. The data entry line must be shortened.

**247 CURSOR DATA BASE ERROR** - Cycle power on the machine. If the alarm reoccurs, call your dealer and report the sequence of events that led to the alarm.

**248 NUMBER RANGE ERROR** - Number entry is out of range. This could be caused by too many digits in an alphabetical address or macro variable. The erroneous data will be placed on the MESSAGES page. Invalid code may be visible in program as a comment with a trailing question mark.

**249 PROG DATA BEGINS ODD** - Possible corrupt program. Save all programs to disk, delete all, then reload.

**250 PROG DATA ERROR** - Possible corrupt program. Save all programs to disk, delete all, and then reload. If the error persists, programs may have to be searched for error on PC, corrected then reloaded.

**251 PROG DATA STRUCT ERROR** - Possible corrupt program. Save all programs to disk, delete all, and then reload. If the error persists, programs may have to be searched for error on PC, corrected then reloaded. Back up all programs on USB or other device, delete all, and reload. Problem may return when programs are reloaded. Programs should be reloaded one at a time to isolate the corrupted program. If any programs cannot be deleted, please contact your dealer.

**252 MEMORY OVERFLOW** - Possible corrupt program. Save all programs to disk, delete all, and then reload. If the error persists, programs may have to be searched for error on PC, corrected then reloaded.

**253 ELECTRONICS OVERHEAT** - The control box temperature has exceeded 140° F (60° C). This can be caused by an electronics problem, high room temperature, or clogged air filter. Test +12, -12, and +5 volt power at MOCON PCB.

**254 SPINDLE MOTOR OVERHEAT** - Motor driving spindle is too hot. This alarm is only generated in machines equipped with a Haas vector drive. The spindle motor temperature sensor sensed a high temperature for greater than 1.5 seconds.

**255 (M) NO TOOL IN SPINDLE** - There is an invalid tool number in the spindle entry of the Pocket-Tool table. The spindle entry cannot be 0 and must be listed in the body of the table. If there is no tool in the spindle, enter the number for an empty pocket into the spindle entry. If there is a tool number in the spindle entry, make sure that it is in the body of the table and that the pocket is empty.

**256 (M) CURRENT TOOL UNKNOWN** - Current tool information has been lost. This is most likely due to re-initialization. It is likely that the next commanded tool change will result in a collision between the spindle and a tool in a pocket. To eliminate the possibility of a crash, perform Tool Changer Restore. Do not use Power Up/Restart, this will cause the machine to try to return a tool to the carousel.

**257 PROG DATA ERROR** - Possible corrupt program. Save all programs to disk, delete all, and then reload. If the error persists, programs may have to be searched for error on PC, corrected then reloaded.

**258 INVALID DPRNT FORMAT** - Macro DPRNT statement not structured properly, check the formatting of the DPRNT commands.

**259 LANGUAGE VERSION** - Problem with language files. Please reload foreign language files.

**260 LANGUAGE CRC** - Indicates Flash memory has been corrupted or damaged. Please reload foreign language files.

**261 ROTARY CRC ERROR** - Rotary table saved parameters (used by Settings 30, 78) have a CRC error. Indicates a loss of memory - possible processor board problem.

**262 PARAMETER CRC MISSING** - RS-232 or disk read of parameter had no CRC when loading from disk or RS-232.

**263 LEAD SCREW CRC MISSING** - Lead screw compensation tables have no CRC when loading from disk or RS-232.

**264 ROTARY CRC MISSING** - Rotary table parameters have no CRC when loading from disk or RS-232.

**265 MACRO VARIABLE FILE CRC ERROR** - Macro variable file has a CRC error. Indicates a loss of memory. Possible corrupted file or processor board problem.

**266 (M) TOOL CHANGER FAULT** - The tool changer was unable to Position, Raise, Rotate or Lower. Parameter 732 Tool Changer Position Delay may be improperly set. Tool changer motor may be broken. Chips may be in tool changer mechanism. Check that tool changer is free to rotate. Run Tool Changer Recovery.

**267 (M) TOOL DOOR OUT OF POSITION** - This alarm will be generated on a horizontal mill during a tool change when Parameter 278, TL DR Switch is set to 1, and the tool carousel air door switch indicates that the door is open after it was commanded closed, or closed after it was commanded open. This alarm will most likely be caused by a stuck or broken switch.

**268 DOOR OPEN @ M95 START** - Generated whenever an M95 (Sleep Mode) is encountered and the door is open. The door must be closed in order to start sleep mode.

**269 (M) TOOL ARM FAULT** - The tool changer arm is not in position. Run Tool Changer Recovery.

**270 C SERVO ERROR TOO LARGE** - Too much load or speed on C-axis motor. The difference between the motor position and the commanded position has exceeded Parameter 506. The motor may also be stalled, disconnected, or the driver failed. The servos will be turned off and a Reset must be done to restart. This alarm can be caused by problems with the driver, motor.

**271 C SERVO OVERLOAD** - Excessive load on C-axis motor. This can occur if load on motor over a period of several seconds or minutes is large enough to exceed the motor's continuous rating. The servos are turned off when this occurs. This alarm can be caused by anything that causes a very high load on the motors.

**272 C-AXIS MOTOR OVERHEAT** - Servo motor overheat. The temperature sensor in the motor indicates over 150° F. This can be caused by an extended overload of the motor such as leaving the slide at the stops for several minutes.

**273 C MOTOR Z FAULT** - Encoder marker pulse count failure. It usually indicates that the encoder has been damaged and encoder position data is unreliable. This can also be caused by loose encoder connectors.

**274 C LIMIT SWITCH** - Axis hit limit switch or switch disconnected. Stored stroke limits should stop the slides before they hit the limit switches. Verify the value of parameter Grid Offset and check wiring to the limit switch. Can also be caused by a loose encoder shaft at the back of the motor or coupling of motor to the screw.

**275 C AXIS Z CH MISSING** - Z reference signal from encoder was not received as expected. Can be caused by loose connections, encoder contamination, or parameter error.

**276 C AXIS DRIVE FAULT** - Current in C servo motor beyond limit. Possibly caused by a stalled or overloaded motor. The servos are turned off. This can be caused by running the axis into a mechanical stop. It can also be caused by a short in the motor or a short of one of the motor leads to ground.

**277 C ZERO RET MARGIN TOO SMALL** - This alarm will occur if the home/limit switches move or are misadjusted. This alarm indicates that the zero return position may not be consistent from one zero return to the next. The encoder Z channel signal must occur between 1/8 and 7/8 revolution of where the home switch releases. This will not turn the servos off, but will stop the zero return operation.

**278 C CABLE FAULT** - Cable from (axis) encoder does not have valid signals, incorrect motor selection, faulty cable, faulty connections or faulty motor. Check parameters to be sure that the mocon channel and encoder type parameters are correctly set. Check encoder cable connections at the mocon and motor. Check Cable. Check motor.

**279 (M) X AXIS LINEAR SCALE Z FAULT** - Encoder marker pulse count failure. This alarm usually indicates

that the Z Fault encoder has been damaged and encoder position data is unreliable. This can also be caused by loose scale connectors.

**280 (M) Y AXIS LINEAR SCALE Z FAULT** - Encoder marker pulse count failure. This alarm usually indicates that the Z Fault encoder has been damaged and encoder position data is unreliable. This can also be caused by loose scale connectors.

**281 (M) Z AXIS LINEAR SCALE Z FAULT** - Encoder marker pulse count failure. This alarm usually indicates that the Z Fault encoder has been damaged and encoder position data is unreliable. This can also be caused by loose scale connectors.

**282 (M) A AXIS LINEAR SCALE Z FAULT** - Encoder marker pulse count failure. This alarm usually indicates that the Z Fault encoder has been damaged and encoder position data is unreliable. This can also be caused by loose encoder connectors.

**283 (M) X AXIS LINEAR SCALE Z CH MISSING** - Broken wires or encoder contamination. All servos are turned off. This Z Channel Missing can also be caused by loose scale connectors.

**284 (M) Y AXIS LINEAR SCALE Z CH MISSING** - Broken wires or encoder contamination. All servos are turned off. This Z Channel Missing can also be caused by loose encoder connectors.

**285 (M) Z AXIS LINEAR SCALE Z CH MISSING** - Broken wires or encoder contamination. All servos are turned off. This Z Channel Missing can also be caused by loose encoder connectors.

**286 (M) A AXIS LINEAR SCALE Z CH MISSING** - Broken wires or encoder contamination. All servos are turned off. This Z Channel Missing can also be caused by loose encoder connectors.

**287 (M) X AXIS LINEAR SCALE CABLE FAULT** - Cable from X-axis scale has no valid differential signals.

**288 (M) Y AXIS LINEAR SCALE CABLE FAULT** - Cable from Y-axis scale has no valid differential signals.

**289 (M) Z AXIS LINEAR SCALE CABLE FAULT** - Cable from Z-axis scale has no valid differential signals.

**290 (M) A AXIS LINEAR SCALE CABLE FAULT** - Cable from A-axis scale has no valid differential signals.

**291 (M) LOW AIR VOLUME/PRESSURE DURING ATC** - An Automatic Tool Change was not completed due to insufficient volume or pressure of compressed air. Check air supply line.

**292 HIGH VOLTAGE POWER SUPPLY FAULT** - 320V VECTOR DRIVE OR MINI MILL POWER SUPPLY fault has occurred. This alarm is generated whenever a condition of over voltage, under voltage, short circuit, over temperature, or shorted regen occurs. This alarm should be followed by another alarm with a detailed explanation of the power supply condition. Press RESET key to continue. If RESET does not clear all alarms cycle power to continue

**293 INVALID CHAMFER OR CORNER ROUNDING DISTANCE IN G01** - Check your geometry.

**294 NO END MOVE FOR G01 CHAMFER CORNER ROUNDING** - A chamfer or corner-rounding move was requested in a G01 command, but no end move was commanded. Check your geometry.

**295 MOVE ANGLE TOO SMALL IN G01 CORNER ROUNDING** - Tangent of half angle is zero. Move Angle must be greater than 1 degree. Check your geometry.

**296 INVALID PLANE SELECTION IN G01 CHAMFER OR CORNER ROUNDING** - Chamfer or corner rounding move and end move must be in the same plane as the beginning move. Check your geometry.

**297 (M) ATC SHUTTLE OVERSHOOT** - The ATC shuttle failed to stop within the allowable standby position window during a tool change. Check for a loose drive belt, damaged or overheated motor, sticking or damaged shuttle standby switch or shuttle mark switch, or burned gear motor control board relay contacts. Use Tool Changer Restore to recover the ATC, then resume normal operation.

**298 (L) CHUCK INCOMPLETE** - Previous chuck clamp or unclamp was incomplete. Cycle foot pedal to clamp or unclamp.

**298 (M) ATC DOUBLE ARM OUT OF POSITION** - ATC double arm mark switch, or CW/CCW position switch is in an incorrect state. Check for sticking, misaligned or damaged switches, mechanism binding, damaged motor, or debris build up. Use Tool Changer Restore to recover the ATC, then resume normal operation.

**299 (M) ATC SHUTTLE OUT OF POSITION** - The ATC shuttle mark switch is in an incorrect state. Check for a sticking, misaligned, or damaged switch, mechanism binding, damaged motor, or debris build up. Use Tool Changer Restore to recover the ATC, then resume normal operation.

**300 NO PROBLEM** - No problem was encountered.

**301 NORMAL STOP** - A program stop was encountered.

**302 INVALID R IN G02 OR G03** - R must be greater than or equal to half the distance from start to end with an accuracy of 0.0010 inches (0.010 mm.). Check your geometry.

**303 (L) INVALID X,B OR Z IN G02 OR G03** - Intersection points in G02 and G03 start and end must have an accuracy of 0.0010 inches (0.010 mm.). Check your geometry.

**303 (M) INVALID X, Y OR Z IN G02 OR G03** - Intersection points in G02 and G03 start and end must have an accuracy of 0.0010 inches (0.010 mm.). Check your geometry.

**304 INVALID I,J OR K IN G02 OR G03** - Radius at start and end must match radius at end of arc with an accuracy of 0.0010 inches (0.010 mm.). Check your geometry.

**305 INVALID Q IN CANNED CYCLE** - Q variable in a canned cycle cannot be zero. Check your program.

**306 INVALID I,J,K, OR Q IN CANNED CYCLE** - I, J, K, and Q variables in a canned cycle must be greater than zero. Check your program.

**307 SUBROUTINE NESTING TOO DEEP** - Subprogram nesting is limited to twenty levels. Simplify your program by using fewer subroutines.

**308 (L) INVALID TOOL OFFSET** - A tool offset not within the range of the control was used.

**309 EXCEEDED MAX FEEDRATE** - Use a feed rate less than or equal to parameter 59. Check setting 9 for correct dimensional units, this can be caused by trying to run MM program in INCH.

**310 INVALID G CODE** - G code not defined and is not a macro call check parameters 91 through 100. Alias G-code not listed in parameters 91 through 100. To alias a G-code specify program to alias to in the corresponding parameter.

**311 UNKNOWN CODE** - Program contained a line or code that is not understood. Check your program.

**312 PROGRAM END** - End of subroutine reached before M99. Need an M99 to return from subroutine. Check your sub routine or sub program for M99. Sub routines and sub programs need to have M99 to return to where they were called from with the M96, M97, M98 or G65.

**313 NO P CODE IN M96, M97, M98, M143, M144, or G65** - M96, M97, M98 or G65 must put subprogram number in P code. P0 for text engraving or P1 for sequential serial number when using G47 text engraving.

**314 SUBPROGRAM NOT IN MEMORY** - Check that a sub-program called by the P code in M98 or G65 is in memory. When calling a sub program with FNC the sub program must reside on the same device and in the same directory as the main program, which calls them. Also, for files that were transferred from USB to hard drive check the case of the file name on the hard drive, sub programs called must have upper case O and lower case extensions. For example: O1234.nc.

**315 (L) INVALID P CODE IN M97, M98 OR M99** - An invalid P Code has been detected in M97, M98, M99, M133, M134, or canned cycle G71, G72, G73, or G70. The P code must be the name of a program stored in memory without a decimal point for M98 and must be a valid N number for all other uses.

**315 (M) INVALID P CODE IN M98, M97, M96, G47 OR G65** - P code must be the name of a program stored in memory without a decimal point for M98 and must be a valid N number for M99. If G47 commanded, then P must be 0 for text engraving and 1 for sequential serial numbers or ASCII value between 32 and 126.

**316 X OVER TRAVEL RANGE** - Commanded X-axis move would exceed the machine travel. Machine coordinates are in negative direction. This indicates either an error in the user's program or improper offsets.

**317 (L) Y OVER TRAVEL RANGE** - Commanded Y-axis move would exceed machine travel. Machine coordinates are in negative direction. This indicates either an error in the user's program or improper offsets.

**317 (M) Y OVER TRAVEL RANGE** - Commanded Y-axis move would exceed machine travel. Machine coordinates are in negative direction. This indicates either an error in the user's program or improper offsets.

**318 Z OVER TRAVEL RANGE** - Commanded Z-axis move would exceed the machine travel. Machine coordinates are in negative direction. This indicates either an error in the user's program or improper offsets.

**319 A OVER TRAVEL RANGE** - Commanded A-axis move would exceed the machine travel. Machine coordinates are in negative direction. This indicates either an error in the user's program or improper offsets.

**320 NO FEED RATE** - Must have an F code commanded for interpolation functions. For G93 inverse time, there must be an F code on each G01 block. F address is modal and if not previously commanded machine will not know what feed rate is specified for a G01, G02 or G03 feed block.

**321 AUTO OFF ALARM** - Occurs in debug mode only.

**322 SUB PROG WITHOUT M99** - Add M99 code to end of program called as a subroutine. Check program.

**323 (M) ATM CRC ERROR** - The power-on consistency check of ATM memory failed. This can happen after a software update. It can also be a symptom of a software problem. Change an ATM tool entry, then change it back. This will recalculate the CRC. If this alarm returns contact your dealer to see if there is a new version of software that fixes this problem.

**324 DELAY TIME RANGE ERROR** - P code in G04 is greater than or equal to 1000 seconds (over 999999 milliseconds). This alarm can also be generated by entering an invalid M95 time format.

**325 QUEUE FULL** - Cycle power on the machine. If the alarm reoccurs, call your dealer and report the sequence of events that led to the alarm.

**326 G04 WITHOUT P CODE** - Put a Pn.n for seconds or a Pn for milliseconds.

**327 NO LOOP FOR M CODE EXCEPT M97, 98** - L code not required here. Remove L Code.

**328 INVALID TOOL NUMBER** - Tool number must be between 1 and value in Parameter 65 for tool changer.

**329 UNDEFINED M CODE** - That M code is not defined and is not a macro call. Check your program.

**330 UNDEFINED MACRO CALL** - A macro called a program number not in memory, or a macro variable was accessed by user program but that macro program is not loaded into memory. Check your program.

**331 RANGE ERROR** - Alphabetic number assignment too large. Check your program.

**332 (M) H AND T NOT MATCHED** - This alarm is generated when Setting 15 is turned ON. An H code number in a running program does not match the T number in the spindle. Correct the H codes, select the right tool, or turn off Setting 15 to run programs don't have corresponding H and T codes.

**333 X AXIS DISABLED** - Parameter has disabled this axis.

**334 (L) Y AXIS DISABLED** - Parameter has disabled Live Tooling.

**334 (M) Y AXIS DISABLED** - Parameter has disabled this axis.

**335 Z AXIS DISABLED** - Parameter has disabled this axis.

**336 (L) A AXIS DISABLED** - An attempt was made to program the A-axis while it was disabled (Disabled bit in Parameter 43 set to 1).

**336 (M) A AXIS DISABLED** - Attempt was made to program the A-axis while it was disabled (Disabled bit in Parameter 43 set to 1), invisible (Invis Axis bit in Parameter 43 set to 1), or a program commanded the A-axis while it was the outside rotary table (Rotary Index button feature, Map 4TH Axis bit in Parameter 315 set to 1).

**337 GOTO OR P LINE NOT FOUND** - Subprogram is not in memory, or P code is incorrect. P Not Found. Check your program.

**338 INVALID IJK AND XYZ IN G02 OR G03** - Intersection points in G02 and G03 start and end must have an accuracy of 0.0010 inches (0.010 mm.). Check your geometry check plane selection G17, G18 or G19.

**339 MULTIPLE CODES** - Only one M, X, Y, Z, A, Q etc. allowed in a block. Only one G code from the same group per block.

**340 CUTTER COMP BEGIN WITH G02 OR G03** - Cutter compensation must begin with a linear move. Check program and turn on cutter compensation on in a G01 block.

**341 CUTTER COMP END WITH G02 OR G03** - Cutter compensation must end with a linear move. Check program and turn off cutter compensation on in a G01 block.

**342 CUTTER COMP PATH TOO SMALL** - Geometry not possible to apply specified compensation amount. Check your geometry use a smaller tool.

**343 DISPLAY QUEUE RECORD FULL** - Cycle power on the machine. If the alarm reoccurs, call your dealer and report the sequence of events that led to the alarm.

**344 (L) CUTTER COMP WITH G17 & G19** - Cutter compensation G41 or G42 not allowed in planes other than XY plane (G17).

**344 (M) CUTTER COMP WITH G18 & G19** - Cutter compensation G41 or G42 not allowed in planes other than XY plane (G17).

**345 (L) INVALID R VALUE IN M19 OR G105** - R value must be positive.

**346 (L) M CODE DISABLED** - M80 or M81 was commanded. These commands are allowed only for the Auto Door feature with Setting 51 Door Hold Override set to ON, parameter 57 Safety Circ disabled (0), and Parameter 57 Door Stop SP disabled (0). An M17 or M18 was commanded in program restart. These commands are illegal in program restart.

**347 (M) INVALID OR MISSING E CODE** - All 5-axis canned cycles require the depth to be specified using a positive E code.

**346 (M) M CODE DISABLED A** - M80 or M81 was commanded. These commands are allowed only for the Auto Door feature with Setting 51 Door Hold Override set to ON, parameter 57 Safety Circ disabled (0), and Parameter 57 Door Stop SP disabled (0). An M17 or M18 was commanded in program restart. These commands are illegal in program restart.

**348 (L) ILLEGAL SPIRAL MOTION** - Linear axis path is too long. For helical motions, the linear path must not be more than the length of the circular component.

**348 (M) MOTION NOT ALLOWED IN G93 MODE** - This alarm is generated if the mill is in Inverse Time Feed mode, and a G12, G13, G70, G71, G72, G150, or any Group 9 motion command is issued.

**349 PROG STOP WITHOUT CANCELING CUTTER COMP** - A cutter compensation exit move with G40 is required before a program stop M00, M01, or end of program M30. Check your program to be sure that cutter compensation ends when path is completed.

**350 CUTTER COMP LOOK AHEAD ERROR** - There are too many non-movement blocks between motions when cutter compensation is being used. Remove intervening blocks.

**351 INVALID P CODE** - In a block with G103, value for P must be between 0 and 15. Check your program.

**352 AUX AXIS POWER OFF** - Aux C, U, V, or W axis indicate servo off. Check auxiliary axes. Status from control was Off.

**353 (L) AUX AXIS NO HOME** - A Zero Ret has not been done yet on the aux axes. Check auxiliary axes. Status from control was Loss.

**353 (M) AUX AXIS NO HOME** - A Zero Ret has not been done yet on the aux axes. Check auxiliary axes.

**354 AUX AXIS DISCONNECTED** - Aux axis not responding. Check auxiliary axes and RS-232 connections.

**355 AUX AXIS POSITION MISMATCH** - Mismatch between machine and aux axis position. Check aux axes and interfaces. Make sure no manual inputs occur to aux axes.

**356 AUX AXIS TRAVEL LIMIT** - Aux axes are attempting to travel past their limits.

**357 AUX AXIS DISABLED** - Aux axes are disabled.

**358 MULTIPLE AUX AXIS** - Can only move one auxiliary axis at a time.

**359 (M) INVALID I, J OR K IN G12 OR G13** - Check your program for G12 and G13 formatting of variables.

**360 TOOL CHANGER DISABLED** - Check Parameter 57 in Mills. Not a normal condition for Lathes.

**361 GEAR CHANGER DISABLED** - Check Parameter 57 in Mills. Not a normal condition for Lathes.

**362 TOOL USAGE ALARM** - Tool life limit was reached. To continue, hi-light the usage counter in the current commands tool life display and press Origin. Then press Reset to clear alarm and continue.

**363 COOLANT LOCKED OFF** - Setting 32 is set to off when coolant was turned on in programmed M-codes or by keypad.

**364 NO CIRC INTERP AUX AXIS** - Only rapid or feed is allowed with aux axes.

**365 P DEFINITION ERROR** - P value not defined, or P value out of range. An M59 or M69 must have a P value between the range of 1100 and 1155. If using G154 command, then P value must be between 1 and 99. Check your program for formatting of the code.

**366 (M) MISSING I, K, OR L IN G70, G71, G72** - Check canned cycles for missing values I, K or L.

**367 CUTTER COMP INTERFERENCE** - Programmed path cannot be computed with tool size. Use a different size tool or adjust the radius offset.

**368 GROOVE TOO SMALL** - Tool too big to enter cut. Use a smaller tool.

**369 TOOL TOO BIG** - Tool too big to enter cut. Use a smaller tool.

**370 (L) TAILSTOCK EXCESSIVE DRIFT** - The tailstock position has changed even though it has not been commanded to do so. Check to make sure that the part is not moving back.

**370 (M) POCKET DEFINITION ERROR** - Check geometry for G150. Check the sub program for path intersection and main program for starting X and Y. Move the starting location of the tool before the G150.

**371 (L) ILLEGAL SPIRAL MOTION** - Liner axis path is too long. For helical motions, the linear path must not be more than the length of the circular component.

**371 (M) INVALID I, J, K OR Q** - Check G150 program block cycle for missing or incorrect values for I, J, K or Q.

**372 TOOL CHANGE IN CANNED CYCLE** - Tool change not allowed while canned cycle is active. Cancel canned cycles with G80 before advancing program to next tool.

**373 INVALID CODE IN DNC** - A code found in a DNC program could not be interpreted because of DNC restrictions. Check your program.

**374 (L) MISSING XBZA IN G31 OR G36** - G31 skip function requires an axis motion.

**374 (M) MISSING XYZA IN G31 OR G36** - G31 skip function requires an axis motion.

**375 (M) MISSING Z OR H IN G37** - G37 Automatic tool length measurement function requires H code, Z value, and tool offset enabled. X, Y, and A values not allowed.

**376 NO CUTTER COMP IN SKIP** - Skip G31 and G37 functions cannot be used with cutter compensation. Check your program and move the skip functions to another location.

**377 NO SKIP IN GRAPH/SIM** - Graphics mode and program restart cannot simulate skip function. Use block delete in program blocks with skip functions for graphic simulation of tool path containing G31 or probing routines.

**378 SKIP SIGNAL FOUND** - Skip signal check code included but skip was found when it was not expected.

**379 SKIP SIGNAL NOT FOUND** - Skip signal check code included but skip not found when it was expected.

**380 X, Y, A OR G49 NOT ALLOWED IN G37** - G37 may only specify Z-axis and must have tool offset defined. Program the correct tool length compensation when using G37.

**381 G43,G44 NOT ALLOWED IN G36 OR G136** - Auto work offset probing must be done without tool offset active. Check your program.

**382 D CODE REQUIRED IN G35** - A Dnn code is required in G35 in order to store the measured tool diameter. Check your program.

**383 INCH IS NOT SELECTED** - G20 Inch mode was specified but settings have selected metric. Change setting 9.

**384 METRIC IS NOT SELECTED** - G21 MM mode was specified but settings have selected inches. Change setting 9.

**385 INVALID L, P, OR R CODE IN G10** - G10 was used to changes offsets but L, P, or R code is missing or invalid. Check your program format.

**386 INVALID ADDRESS FORMAT** - An alphabetical address was used improperly. Check your program.

**387 CUTTER COMP NOT ALLOWED WITH G103** - If block lookahead has been limited, cutter compensation will not function. Remove the block limit for cutter compensation. Check your program.

**388 CUTTER COMP NOT ALLOWED WITH G10** - Coordinates cannot be altered while Cutter Comp is active. Move the G10 outside of Cutter Compensation enablement.

**389 G17, G18, G19 ILLEGAL IN G68** - Planes of rotation cannot be changed while rotation is enabled. Cancel rotation then select new plane.

**390 NO SPINDLE SPEED** - Required S code not commanded. Check program for a spindle speed command.

**391 FEATURE DISABLED** - An attempt was made to use a software feature not enabled by a parameter bit. If the option was purchased and the parameter bit is 0 enter the unlock code for the option if available. Code is enclosed in the user manual list of option printout.

**392 (L) B AXIS DISABLED** - An attempt was made to program the B-axis while it was disabled (Disabled bit in Parameter 151 set to 1).

**392 (M) B AXIS DISABLED** - Attempt made to program the B-axis while it was disabled (Disabled bit in Parameter 151 set to 1), invisible (Invis Axis bit in Parameter 151 set to 1), or program commanded the B-axis while it was the outside rotary table (Rotary Index button feature, Map 4TH Axis bit in Parameter 315 set to 1).

**393 (L) INVALID MOTION IN G84 OR G184** - Rigid Tapping can only be in the Z minus direction. Make sure

that the distance from the initial position to the commanded Z depth is in the minus direction.

**393 (M) INVALID MOTION IN G74 OR G84** - Rigid Tapping G74 or G84 can only be in the Z minus direction. Make sure that the distance from the reference position to the commanded Z depth is in the minus direction. Check your program for G74 or G84 formatting.

**394 (L) B OVER TRAVEL RANGE** - Tailstock (B-axis) will exceed stored stroke limits. This is in a negative direction and is machine zero in the positive direction. It only occurs during the operation of a user's program.

**394 (M) B OVER TRAVEL RANGE** - B-axis will exceed stored stroke limits. This is in a negative direction and is machine zero in the positive direction. It only occurs during the operation of a user's program.

**395 (L) INVALID CODE IN CANNED CYCLE** - Any canned cycle requiring a PQ path sequence may not have an M code in the same block. That is G70, G71, G72, and G73.

**395 (M) NO G107 ROTARY AXIS SPECIFIED** - For axis substitution, a rotary axis must be specified in order to perform cylindrical mapping to function. Check your program for G107 formatting and program the linear axis that is going to be mapped.

**396 (M) INVALID G107 ROTARY AXIS SPECIFIED** - The rotary axis specified in G107 is not a valid axis, or has been disabled. G107 requires either A or B axis to be commanded. Check your program for G107 formatting and program the linear axis that is going to be mapped to the rotary.

**397 (L) INVALID D CODE** - A D value entered in a Canned Cycle must be a positive value. The D will always refer to the Depth of cut. Check your program.

**397 (M) AUX AXIS IN G93 BLOCK** - Auxiliary axis interpolation cannot be commanded in G93 feed mode. Check your program. An auxiliary axis cannot be programmed to move in a feed mode with any other axis.

**398 AUX AXIS SERVO OFF** - Aux. axis servo shut off due to a fault.

**399 (L) INVALID U CODE** - In the context that the U code was used it had an invalid value. Was it positive?

**400 SKIP SIGNAL DURING RESTART** - A skip signal G-code (G31, G35, G36, G37, G136) was found during program restart. Graphics mode and program restart cannot simulate skip function. Use block delete in program blocks with skip functions for graphic simulation of tool path.

**401 (L) INVALID TANGENT IN GROUP 1 CORNER ROUNDING** - Check your geometry.

**401 (M) INVALID TANGENT IN GROUP 1 CORNER ROUNDING OR CHAMFERING** - The point or angle calculated has yielded invalid results in automatic chamfering or corner rounding. This can be for one of the following: 1.) Tangent of angle was too close to zero. 2.) Cosine of angle was invalid. 3.) Hypotenuse of calculated right triangle was shorter than side. 4.) Calculated point did not line on arc or line. Check your program for geometry error and recalculate your coordinates.

**402 POSSIBLE CORRUPTED FILE** - Parameters being loaded do not match expected parameters. This can be due to loading an older or newer parameter file than the system binary, or a corrupt file.

**403 TOO MANY PROGS** - Control memory program storage cannot exceed 500 individual program numbers.

**404 RS-232 NO PROG NAME** - Program number required in file when sending to CNC. Program must have a name beginning with the letter "O". Check program for proper name format. The program number may have a block number in front of it, if it does, remove the block number and reload the program.

**405 RS-232 ILLEGAL PROG NAME** - Check files being loaded. Program name must be Onnnn and be at beginning of a block by itself. Program number must be located in the second program block by itself directly after the first %. If program number has block number in front of it, remove block number and reload program.

**406 RS-232 MISSING CODE** - Bad data was received. The program is stored but the bad data is turned into a comment. Check your program. Check program for ( ?) or message screen for displayed block with error.

**407 RS-232 INVALID CODE** - The program will be stored but the bad data is turned into a comment. Check program for comment ( ?) or message screen for displayed block with error.

**408 RS-232 NUMBER RANGE ERROR** - Check your program. The program will be stored but the bad data is turned into a comment. Check program for comment ( ?) or message screen for displayed block with error.

**409 (L) RS-232 INVALID N CODE** - Bad Parameter or Setting data. User was loading settings or parameters and something was wrong with the data.

**409 (M) FILE INVALID N CODE** - Positive number must exist after the N character in parameter and setting files, and the block data cannot be longer than 5 digits.

**410 (L) RS-232 INVALID V CODE** - Bad Parameter or Setting data. User was loading settings or parameters and something was wrong with the data.

**410 (M) FILE INVALID V CODE** - Positive or negative number must exist after the 'V' character in the parameter and setting files, and the block data cannot exceed 10 digits.

**411 RS-232 EMPTY PROG** - No program number found between % signs in file. Check file for formatting.

**412 RS-232 UNEXPECTED END OF INPUT** - Program should begin and end with % sign. No text should follow the second % sign. Check your file.

**413 RS-232 LOAD INSUFFICIENT MEMORY** - Program received does not fit into available free memory. Check the space available in the LIST PROG and possibly delete some programs to free memory space.

**414 RS-232 BUFFER OVERFLOW** - Computer sending data may not be responding to XOFF. Data sent too fast to CNC, try slower baud rate and check PC for settings for XOFF.

**415 RS-232 OVERRUN** - Data sent too fast to CNC. Data sent too fast to CNC, try slower baud rate.

**416 RS-232 PARITY ERROR** - Data received by CNC has bad parity. Check parity settings, number of data bits and speed. Check your cable configuration, cable needs to be null modem.

**417 RS-232 FRAMING ERROR** - Data received was garbled and proper framing bits were not found. One or more characters of the data will be lost. Check parity settings, number of data bits and speed.

**418 RS-232 BREAK** - Break condition while receiving. The sending device set the line to a break condition. This might also be caused by a simple break in the cable.

**419 INVALID FUNCTION FOR DNC** - A code found on input of a DNC program could not be interpreted.

**420 PROGRAM NUMBER MISMATCH** - O code in program being loaded to machine memory did not match O code entered at the keyboard to receive. This is a warning message only and does not stop the transfer.

**421 (M) NO VALID POCKETS** - Pocket Table is full of dashes.

**422 (M) POCKET TABLE ERROR** - If the machine has a 50 taper spindle, there must be 2 dashes between L's. L's must be surrounded by dashes. Reorganize tools in changer.

**423 (L) SERVO BAR EOB SWITCH POSITION UNKNOWN** - Place 12 inch standard bar in charging position and run G105 Q5 to set End of Bar Switch Position.

**423 (M) X SCALE/SCREW MISMATCH** - Scale-induced correction exceeds one motor revolution.

**424 (L) SERVO BAR METRIC UNSUPPORTED** - Metric mode unsupported, change Setting 9 to inch.

**424 (M) Y SCALE/SCREW MISMATCH** - Scale-induced correction exceeds one motor revolution.

**425 (L) SERVO BAR LENGTH UNKNOWN** - Both the bar length and reference position are unknown. Unload the bar, Run G105 Q4 followed by G105 Q2 or Q3.

**425 (M) Z SCALE/SCREW MISMATCH** - Scale-induced correction exceeds one motor revolution.

**426 (L) SERVO BAR ILLEGAL CODE G105** - Feed Bar commanded with an illegal code on block. Legal codes are I, J, K, P, Q, R

**426 (M) A SCALE/SCREW MISMATCH** - Scale-induced correction exceeds one motor revolution.

**427 INTERRUPT OVERRUN** - The control detected an interrupt overrun condition. An interrupt occurred before the previous interrupt was completed. Call your dealer.

**428 (L) SERVO BAR SWITCH FAILURE** - One of the switches controlling the Servobar failed.

**429 DISK DIR INSUFFICIENT MEMORY** - CNC memory full when attempt is made to read directory. Check space available in the LIST PROG and possibly delete or download some programs to free memory space.

**430 (L) FILE BEGINNING/END MARKER MISSING** - Beginning or ending % sign not found. Check program for start and end of file characters % format as required.

**430 (M) FILE UNEXPECTED END OF INPUT** - Ending % sign not found. Check your program. An ASCII EOF code was found in the input data before program receive was complete. This is a decimal code 26.

**431 (L) DISK NO PROG NAME** - Need name in programs when receiving All; if not, no way to store them.

**431 (M) FILE NO PROG NAME** - Program number missing in file when loading.

**432 (L) DISK ILLEGAL PROG NAME** - Check files being loaded. Program must be Onnnnn and must be at the beginning of a block.

**432 (M) FILE ILLEGAL PROG NAME** - Check files being loaded. Program must be Onnnnn and must be at the beginning of a block.

**433 (L) DISK EMPTY PROG** - Check your program. Between % and % there was no program found.

**433 (M) FILE EMPTY PROG** - Check your program. Between % and % there was no program found.

**434 (L) DISK LOAD INSUFFICIENT MEMORY** - Program received does not fit. Check the space available in the List Prog mode and possibly delete some programs.

**434 (M) FILE LOAD INSUFFICIENT MEMORY** - Program loading into memory does not fit in available space. Check space available in the LIST PROG mode, download and delete some programs to free memory space.

**435 DISK ABORT** - Could not read disk. Possible corrupted or unformatted disk, pressing reset during transmission. Try a known good disk or a new disk formatted FAT file system. Also caused by dirty drive heads. Use an appropriate cleaning kit.

**436 DISK FILE NOT FOUND** - Could not find file by that name. File name needs to be entered as it is on floppy. Possible corrupted or unformatted disk. Try a known good disk or a new disk formatted FAT file system. Can also caused by dirty drive heads. Use an appropriate cleaning kit. Verify file is on disk.

**437 (L) TAILSTOCK UNDERSHOOT** - The tailstock did not reach its intended destination point. Check the value of parameter 293 or check Setting 107 compare it to the actual position of the B axis.

**438 (L) TAILSTOCK MOVED WHILE HOLDING PART** - The part moved while turning a part. Check Setting 107 and the actual position of the B axis as compared to setting 107.

**439 (L) TAILSTOCK FOUND NO PART** - During an M21 or G01, the tailstock reached the hold point without encountering the part.

**440 (L) SERVO BAR MAX PARTS REACHED** - Job Complete. Reset Current # Parts Run on Servobar current commands page.

**441 (L) SERVO BAR MAX BARS REACHED** - Job Complete. Reset Current # Bars Run on Servobar current commands page.

**442 (L) SERVO BAR MAX LENGTH REACHED** - Job Complete. Reset Current Length Run on Servobar cur-

rent commands page.

**443 (L) SERVO BAR ALREADY NESTED** - An Illegal G105 Pnnn was found in cutoff subprogram.

**444 REGEN ON TOO LONG** - The power supply detected a condition in which the Regen stays active too long. This condition indicates that the incoming AC voltage is too high, elevating the DC bus, that the Regen load is open or disconnected, or there is excessive power being dumped by the spindle motor. This can also be caused by a DECEL Parameter too high. Check the connections and resistance of the REGEN load, the incoming AC voltage and the value of Parameter 186. Cycle power to continue.

**445 (L) SERVO BAR FAULT** - Servobar program error.

**446 (L) SERVO BAR BAR TOO LONG** - Bar that was just loaded is longer than Length of Longest Bar as displayed on Servobar current commands page. The system was unable to accurately measure it. Remove the loaded bar and measure its length. In Current Commands, page up to the Servo Bar System Variables. Make sure variable 3109 Length of Longest Bar has a value which is longer than the length of the bar.

**447 (L) SERVO BAR BAR IN WAY** - The end of bar switch was depressed and a load or unload bar was commanded. Remove the bar. Check the function of the switch in diagnostics display. End of Bar Switch input should normally be 0, then change to 1 when depressed.

**448 (L) SERVO BAR OUT OF BARS** - Add more Bars.

**450 (L) BAR FEEDER FAULT** - This means that discrete input 1030 (BFSPLK) is high. See Parameter 278 bit 20 CK BF Status.

**451 (L) BAR FEEDER SPINDLE INTERLOCK** - This means that discrete input 1027 (BF FLT) is high. See parameter 278 bit 21 CK BF SP ILK.

**452 (L) SERVO BAR GEARMOTOR TIMEOUT** - The motor which loads bars and the push rod did not complete its motion in the allowed time. Check for jammed bars. There may be problem with the I/O board. Macro commands can be used for troubleshooting, #1110=1 for mills, and #1108=1 for lathes. The motor should come on instantly and run until stopped by pressing the reset button.

**453 (L) C AXIS ENGAGED** - A spindle command was given with the C-axis drive engaged. The C-axis motor must be disengaged with M155 before a spindle brake or gear change.

**454 (L) C AXIS NOT ENGAGED** - A command was given to the C-axis without the C-axis engaged. The C-axis drive must be engaged with M154 before commanding the C-axis.

**455 (L) G112 BLOCK ENDS W/O CANCEL CUTTER COMP** - An X/Y cutter compensation exit move is required before a G113 is issued to cancel the G112 block.

**456 PARAMETER CONFLICT** - Conflict between two or more of the Axis MOCON Channel parameters.

**457 AUX AXIS IS ENABLED** - One or more auxiliary axes are enabled. For the macro variables 750 and 751 to work the auxiliary axes must be disabled. Make sure Setting 38 is set to 0.

**458 (M) LINEAR SCALES ENABLED WITHOUT MOTIF** - Linear scales is enabled on an axis but a MOTIF card was not detected.

**459 (L) APL DOOR FAULT** - Door was not completely open while APL was inside CNC, or Parameter 315 bit 5 was set to zero.

**460 (L) APL ILLEGAL CODE** - Internal software error; call your dealer.

**461 (L) APL GRIPPER TIMEOUT** - The gripper failed to reach its target position within the allowed time.

**462 (L) U OVER TRAVEL RANGE** - Commanded U-axis move would exceed allowed machine range. Coordinates are in the negative direction, and indicates an error in the user's program or improper offsets.

**463 (L) V OVER TRAVEL RANGE** - Commanded V-axis move would exceed allowed machine range. Coordi-

nates are in the negative direction, and indicates an error in the user's program or improper offsets.

**464 (L) W OVER TRAVEL RANGE** - Commanded W-axis move would exceed allowed machine range. Coordinates are in the negative direction, and indicates an error in the user's program or improper offsets.

**465 UNICODE DATA FOUND IN FILE NAME** - Unicode formatted data was found in the file name. This must be changed to an ASCII file name for proper use.

**466 UNICODE DATA FOUND IN FILE** - The file has Unicode data. The file must be saved in a ASCII file and data format. Please make sure of data in the file is stored in ASCII character format.

**467 G02 OR G03 WITH UNEQUAL SCALES** - G02 or G03 commands cannot be used when G51 X,Y, or Z scales are not the same. Use setting 71 instead of settings 188-190, or make settings 188-190 the same, or delete all G02 and G03 commands.

**468 (L) U LIMIT SWITCH** - Axis hit limit switch or switch disconnected. Stored stroke limits should stop slides before they hit limit switches. Verify value of Parameter 373, Grid Offset and check wiring to the limit switch. Can also be caused by a loose encoder shaft at the back of the motor or coupling of motor to the screw.

**469 (L) V LIMIT SWITCH** - Bar feeder hit limit switch or switch disconnected. Stored stroke limits should stop slides before they hit limit switches. Verify value of Parameter 409, Grid Offset and check wiring to limit switch. Can also be caused by a loose encoder shaft at back of the motor or coupling of motor to the screw.

**470 (L) W LIMIT SWITCH** - Axis hit limit switch or switch disconnected. Stored stroke limits should stop slides before they hit limit switches. Verify value of Parameter 445, Grid Offset and check wiring to the limit switch. Can also be caused by a loose encoder shaft at the back of the motor or coupling of motor to the screw.

**471 OUT OF TOOLS** - The life of all tools in the programmed group have expired. Change tools and reset tool life data in the tool group to continue.

**472 ATM FAULT** - Indicates an error related to the Advanced Tool Management feature. ATM software encountered a group which does not exist. Usually can be fixed by adding the corresponding group.

**473 (L) INVALID GEOMETRY** - The geometry specified by the G-code parameters is invalid. If using G76 or G92, either reduce Setting 95 (Thread Chamfer Size) or increase the number of threads.

**474 (M) G02 OR G03 NOT ALLOWED WITH G143** - G02 and G03 allowed in G143 mode only if A and B axes are at machine zero position. Current A and B axes machine positions must be zero. Also, G02 or G03 must not command A or B axis to a non-zero machine position. Verify work offsets for A and B axes are zero.

**475 CLOCK NOT SET** - Please set the correct time and date.

**476 EXTERNAL MEMORY BUS ERROR** - A bus error occurred on the external bus. This can result from a loose bus cable, faulty hardware, or errant system software.

**477 FPU BSUN ERROR** - A BSUN exception has occurred on the floating point unit. The execution address where this occurred can be found in the FPE ERR field of the LL DEBUG screen.

**478 FPU INEX ERROR** - A BSUN exception has occurred on the floating point unit. The execution address where this occurred can be found in the FPE ERR field of the LL DEBUG screen.

**479 FPU UNFL ERROR** - A BSUN exception has occurred on the floating point unit. The execution address where this occurred can be found in the FPE ERR field of the LL DEBUG screen.

**480 FPU OPERR ERROR** - A BSUN exception has occurred on the floating point unit. The execution address where this occurred can be found in the FPE ERR field of the LL DEBUG screen.

**481 FPU OVFL ERROR** - A BSUN exception has occurred on the floating point unit. The execution address where this occurred can be found in the FPE ERR field of the LL DEBUG screen.

**482 FPU INAN ERROR** - A BSUN exception has occurred on the floating point unit. The execution address where this occurred can be found in the FPE ERR field of the LL DEBUG screen.

**483 FPU IDE ERROR** - A BSUN exception has occurred on the floationg point unit. The execution address where this occurred can be found in the FPU ERR field of the LL DEBUG screen.

**484 CONFLICTING AXES** - An Incremental and Absolute command cannot be used in the same block of code. For example, X and U cannot be used in the same block.

**485 USB RESET OCCURRED** - The USB firmware experienced a reset. This can occur if the USB media is extremely fragmented, or if there are many files in the directory. Try a faster USB. Defragment USB using Windows disk tools, or use a USB device with fewer files on it. If this problem persists, call your dealer.

**486 NETWORK FILE I/O FAILED** - An error occurred while trying to access a file from a network location. Check your network connection.

**487 USB FILE I/O FAILED** - An error occurred while trying to access a file from a USB device. Make sure the USB device is properly connected. Check the device for file corruption.

**488 INTERNAL CPU BUS ERROR** - A bus error occurred on the CPU's bus. This is usually a result of errant system software.

**489 INVALID FNC FILE** - The file is not a valid file for FNC. Either it contains non ASCII characters or lines exceed 500 characters in length.

**491 KEYBOARD INTERFACE COMMUNICATION RESTORED** - The main control has re-established communication with the serial keyboard interface (SKBIF). Alarm 967 preceded this event. Operation of the machine can continue after all alarms are cleared. Clear the alarms by pressing the RESET button.

**492 HARD DRIVE FILE I/O FAILED** - An error occurred while trying to access a file from the hard drive. Make sure the file has not been removed. Try to delete and reload the file into the hard drive.

**493 REMOVABLE MEDIA DISCONNECTED** - The removable media (such as USB or network) was disconnected during FNC operation.

**494 G187 E CODE NOT WITHIN SPECIFIED RANGE** - The accuracy command G187 can temporarily override the value given in Setting 85 Maximum Corner Rounding. The E value must be greater than zero, but less than .2501 inches or 6.351 mm.

**495 (M) G187 P CODE OUT OF RANGE** - The accuracy command G187 can temporarily override the value given in Setting 91 Default Smoothness. The P value must be 1, 2, or 3. P1 will set the smoothness to Rough, P2 will set smoothness to Medium and P3 will set the smoothness to Finish.

**496 (L) DATA VALUE ERROR DETECTED IN PQ BLOCK** - An address code value in the PQ block exceeds the maximum for the data storage type. The value must not exceed 8380.000 nor be less than -8380.000. Examine your program and change the value of the address code as necessary.

**497 DATA VALUE ERROR DETECTED IN PROGRAM** - An address code value in the program exceeds the maximum for the data storage type. The value must not exceed 8380.000 nor be less than -8380.000. Examine your program and change the value of the address code as necessary.

**498 N CODE IN PROGRAM EXCEEDS MAXIMUM 8 DIGITS** - The N address code for the current block exceeds the maximum of 8 digits. The N code value may be 1 to 8 digits only.

**499 DATA VALUE IN PROGRAM OUT OF RANGE** - An address code value in the program exceeds the maximum for the data storage type. An integer value was expected. Examine your program and change the value of the address code as necessary.

**500 INCORRECT EOB FORMAT** - An incorrect EOB format was encountered while loading a file. Make sure that the loading file format matches the EOB pattern in setting 25.

**501 TOO MANY ASSIGNMENTS IN ONE BLOCK** - Only one assignment macro assignment is allowed per block. Divide assignment blocks into multiple blocks.

**502 [ OR = NOT FIRST TERM IN EXPRESSN** - An expression element was found where it was not preceded

by [or =, that start expressions. Check your macro program.

**503 ILLEGAL MACRO VARIABLE REFERENCE** - Macro variable programmed that is not supported by this control. Use the correct macro variable. Operator manual lists all system variables available for use.

**504 UNBALANCED BRACKETS IN EXPRESSION** - Unbalanced brackets, [ or ], were found in an expression. Add or delete a bracket. Check the macro formatting.

**505 VALUE STACK ERROR** - The macro expression value stack pointer is in error. Cycle power on the machine. If the alarm reoccurs, call your dealer and report the sequence of events that lead to the alarm. Check macro formatting.

**506 MACRO STATEMENT SYNTAX ERROR** - A syntax error was found. Check your macro program. Address variables without a number can also cause this alarm.

**507 TOO FEW OPERANDS ON STACK** - An expression operand found too few operands on the expression stack. Cycle power on the machine. If the alarm reoccurs, call your dealer and report the sequence of events that lead to the alarm. Check macro formatting.

**508 DIVISION BY ZERO** - A division in a macro expression attempted to divide by zero. Re-configure the macro expression. Check macro formatting for a calculation or call that is referencing a zero value variable.

**509 ILLEGAL MACRO VARIABLE USE** - See Operator manual macro section for valid variables.

**510 ILLEGAL OPERATOR OR FUNCTION USE** - See Operator manual macro section for valid variables.

**511 UNBALANCED RIGHT BRACKETS** - Number of right brackets not equal to the number of left brackets. Check macro formatting.

**512 ILLEGAL ASSIGNMENT USE** - Attempted to write to a read-only macro variable. See Operator manual macro section for valid variables. Parameter and setting variables are read only.

**513 VARIABLE REFERENCE NOT ALLOWED WITH N OR O** - Alphabetic addresses N and O are illegal variables. You cannot declare N#1, etc. See Operator manual macro section for valid variables.

**514 ILLEGAL MACRO ADDRESS REFERENCE** - Alphabetic addresses N and O are illegal variables. You cannot declare N#1, etc. See Operator manual macro section for valid variables.

**515 TOO MANY CONDITIONALS IN A BLOCK** - Only one conditional expression is allowed in any WHILE or IF-THEN block. Check macro formatting.

**516 ILLEGAL CONDITIONAL OR NO THEN** - A conditional expression was found outside of an IF-THEN, WHILE, or M99 block. Check macro formatting.

**517 EXPRSN. NOT ALLOWED WITH N OR O** - Alphabetic addresses N and O are illegal variables. You cannot declare N#1, etc. See Operator manual macro section for valid variables.

**518 ILLEGAL MACRO EXPRESSION REFERENCE** - Alphabetic addresses N and O are illegal variables. You cannot declare N#1, etc. See Operator manual macro section for valid variables.

**519 TERM EXPECTED** - In the evaluation of a macro expression, an operand was expected but not found. Check macro formatting.

**520 OPERATOR EXPECTED** - In the evaluation of a macro expression, an operator was expected but not found. Check macro formatting.

**521 ILLEGAL FUNCTIONAL PARAMETER** - An illegal value was passed to a function, such as SQRT[ or ASIN[. Check macro formatting.

**522 ILLEGAL ASSIGNMENT VAR OR VALUE** - A variable was referenced for writing. The variable referenced is read only. See Operator manual macro section for valid variables. Parameter and setting variables are read only.

**523 CONDITIONAL REQUIRED PRIOR TO THEN** - A THEN was encountered and a conditional statement was not processed in the same block. Check macro formatting.

**524 END FOUND WITH NO MATCHING DO** - An END was encountered without encountering a previous matching DO. DO-END numbers must agree. Check macro formatting.

**525 VAR. REF. ILLEGAL DURING MOVEMENT** - Variable cannot be read during axis movement.

**526 COMMAND FOUND ON DO/END LINE** - A G-code command was found on a While-Do or End macro block. Move the G-code to a separate block.

**527 = NOT EXPECTED OR THEN REQUIRED** - Only one assignment is allowed per block, or a THEN statement is missing. Check macro formatting.

**528 PARAMETER PRECEDES G65** - On G65 lines, all parameters must follow the G65 G-code. Place parameters after G65.

**529 ILLEGAL G65 PARAMETER** - Alphabetic addresses G, L, N, O, and P cannot be used to pass variables. See Operator manual macro section for valid variables. Select an alternate address.

**530 TOO MANY I, J, or K'S IN G65** - Only 10 occurrences of I, J, or K can occur in a G65 subroutine call. Reduce the I, J, or K count. Check macro formatting.

**531 MACRO NESTING TOO DEEP** - Only nine levels of macro nesting can occur when using G65. Reduce the number of nested macro calls.

**532 UNKNOWN CODE IN POCKET PATTERN** - Macro syntax is not allowed in a pocket pattern subroutine. Check macro formatting.

**533 MACRO VARIABLE UNDEFINED** - A conditional expression evaluated to an UNDEFINED value, i.e. #0. Return True or False. Check macro formatting.

**534 DO OR END ALREADY IN USE** - Multiple use of a DO that has not been closed by an END in the same subroutine. Close condition with END and use another DO number.

**535 ILLEGAL DPRNT STATEMENT** - A DPRNT statement has been formatted improperly, or DPRNT does not begin block. Check format of DPRNT statements.

**536 COMMAND FOUND ON DPRNT LINE** - A G-code was included on a DPRNT block. Make two separate blocks, only DPRNT statement on block allowed. Check macro formatting.

**537 RS-232 ABORT ON DPRNT** - While a DPRNT statement was executing, the RS-232 communications failed. Check to see that PC is ready to receive with port open.

**538 MATCHING END NOT FOUND** - While-Do statement does not contain a matching "End" statement. Add the proper "End" statement.

**539 ILLEGAL GOTO** - Macro statement includes an expression after GOTO that is not valid.

**540 MACRO SYNTAX NOT ALLOWED** - A section of code was interpreted by the control where macro statement syntax is not permitted. In lathe controls, PQ sequences describing part geometry cannot use macro statements in the part path description.

**541 MACRO ALARM** - This alarm was generated by a macro command in a program.

**542 OPERATION NOT AVAILABLE** - This operation is not compatible with FNC mode.

**543 (M) G51 P CODE OUT OF RANGE** - The G51 P scaling factor code must be a decimal value with no more than 3 places to the right of the decimal point. The value must be greater than zero and less than or

equal to 8380.000.

**544 (M) G68 R CODE OUT OF RANGE** - The G68 R code rotation angle must be specified as a decimal value with no more than 3 places to the right of the decimal point. The value of R must be greater than or equal to -360.000 degrees and less than or equal to +360.000 degrees.

**545 (M) AXIS OVER TRAVEL IN GRAPH OF ARC** - An axis other than X, Y, or Z, was commanded to a position that would exceed travel limits. This indicates either an error in the part program or improper offsets. Check these and rerun the program.

**548 DOOR M CODES NOT ALLOWED** - M80 (mill) and M85 (lathe) are not permitted except when used with the Cell Safe signal which must be present in robot tended installations. In non-robot tended operations M00 and M01 will open the door when setting 131 Autodoor is set to ON.

**600 (L) CODE NOT EXPECTED IN THIS CONTEXT** - During program interpretation, the control found code out of context. This may indicate an invalid address code found in a PQ sequence. It may also indicate faulty memory hardware or lost memory. Examine the highlighted line for improper G-code.

**600 (M) U OVER TRAVEL RANGE** - Commanded U-axis move would exceed allowed machine range. Machine coordinates are in the negative direction. This indicates either an error in the user's program or improper offsets.

**601 (L) MAXIMUM PQ BLOCKS EXCEEDED** - The maximum number of blocks making up a PQ sequence was exceeded. Currently, no more than 65535 blocks can be between P and Q.

**601 (M) V OVER TRAVEL RANGE** - Commanded V-axis move would exceed the allowed machine range. Machine coordinates are in the negative direction. This indicates either an error in the user's program or improper offsets.

**602 (L) NON-MONOTONOUS PQ BLOCKS IN X** - The path defined by PQ was not monotonic in the X-axis. A monotonic Path is one that does not change direction starting from the first Motion block. The control is looking for the X-axis to move in a continuous motion from small to big or big to small. You cannot change direction in the X-axis with out defining the tool path as a type II canned cycle. If this is the case you need to add a Z-axis reference on the same line as the first X-axis move after the G71.

**602 (M) W OVER TRAVEL RANGE** - Commanded W-axis move would exceed the allowed machine range. Machine coordinates are in the negative direction. This indicates either an error in the user's program or improper offsets.

**603 (L) NON-MONOTONOUS PQ BLOCKS IN Z** - The path defined by PQ was not monotonic in the Z-axis. A monotonic Path is one that does not change direction starting from the first motion block. The control is looking for the Z-axis to move in a continuous motion from the face of the part towards the chuck or from the face of the chuck towards the end of the part. You cannot change direction in the Z-axis with out defining the tool path as a type II canned cycle. If this is the case you need to add a X-axis reference on the same line as the first Z-axis move after the G71.

**603 (M) U LIMIT SWITCH** - Axis hit limit switch or switch disconnected. The stored stroke limits should stop the slides before they hit the limit switches. Verify the value of Parameter 373, Grid Offset and check the wiring to the limit switch. Can also be caused by a loose encoder shaft at the back of the motor or the coupling of the motor to the screw.

**604 (L) NON-MONOTONOUS ARC IN PQ BLOCK** - A non-monotonic arc was found in a PQ block. This will occur in PQ blocks within a G71 or G72 if the arc changes its X or Z direction. Increasing the arc radius will often correct this problem.

**604 (M) V LIMIT SWITCH** - Axis hit limit switch or switch disconnected. The stored stroke limits should stop the slides before they hit the limit switches. Verify the value of Parameter 409, Grid Offset and check the wiring to the limit switch. Can also be caused by a loose encoder shaft at the back of the motor or the coupling of the motor to the screw.

**605 (L) INVALID TOOL NOSE ANGLE** - An invalid angle for the cutting tool tip was specified. This will occur in a G76 block if the A address has a value that is not from 0 to 120°.

**605 (M) W LIMIT SWITCH** - Axis hit limit switch or switch disconnected. The stored stroke limits should stop the slides before they hit the limit switches. Verify the value of Parameter 445, Grid Offset and check the wiring to the limit switch. Can also be caused by a loose encoder shaft at the back of the motor or the coupling of the motor to the screw.

**606 (L) INVALID A CODE** - An invalid angle for linear interpolation was specified. This will occur in a G01 block if the A address was congruent to 0 or 180°.

**607 (L) INVALID W CODE** - In the context that the W code was used it had an invalid value. Was it positive?

**608 INVALID Q CODE** - Q address code used as a numeric value that was incorrect in the context used. In M96 Q can reference only bits 0 to 63. Use the appropriate value for Q in the range of 0 to 63.

**609 (L) TAILSTOCK RESTRICTED ZONE** - This alarm is caused by an axis moving into the tailstock restricted zone during program execution. To eliminate the problem, change the program to avoid the restricted zone or change Setting 93 or Setting 94 to adjust the restricted zone. To recover, go to jog mode, press Reset twice to clear the alarm, then jog away from the restricted zone.

**609 (M) U SERVO ERROR TOO LARGE** - Too much load or speed on U-axis motor. The difference between the motor position and the commanded position has exceeded Parameter 362. The motor may also be stalled, disconnected, or the driver failed. The servos will be turned off and a Reset must be done to restart. This alarm can be caused by problems with the driver, motor, or the slide being run into the mechanical stops.

**610 (L) G71/G72 DOMAIN NESTING EXCEEDED** - The number of troughs nested has exceeded the control limit. Currently, no more than 10 levels of trough can be nested. Refer to the explanation of G71 for a description of trough nesting.

**610 (M) V SERVO ERROR TOO LARGE** - Too much load or speed on V-axis motor. The difference between the motor position and the commanded position has exceeded Parameter 398. The motor may also be stalled, disconnected, or the driver failed. The servos will be turned off and a Reset must be done to restart. This alarm can be caused by problems with the driver, motor, or the slide being run into the mechanical stops.

**611 (L) G71/G72 TYPE I ALARM** - When G71 or G72 is executing and the control detects a problem in the defined PQ path. It is used to indicate which method of roughing has been selected by the control. It is generated to help the programmer when debugging G71 or G72 commands. The control often selects Type I roughing when the programmer has intended to use Type II roughing. To select Type II, add R1 to the G71/G72 command block (in YASNAC mode), or add a Z-axis reference to the P block (in FANUC mode).

**611 (M) W SERVO ERROR TOO LARGE** - Too much load or speed on W-axis motor. The difference between the motor position and the commanded position has exceeded Parameter 434. The motor may also be stalled, disconnected, or the driver failed. The servos will be turned off and a Reset must be done to restart. This alarm can be caused by problems with the driver, motor, or the slide being run into the mechanical stops.

**612 (L) G71/G72 TYPE II ALARM** - This alarm is similar to Alarm 611, but indicates that the control has selected Type II roughing.

**612 (M) U SERVO OVERLOAD** - Excessive load on U-axis motor. This can occur if the load on the motor over a period of several seconds or even minutes is large enough to exceed the continuous rating of the motor. The servos will be turned off when this occurs. This can be caused by running into the mechanical stops or by anything that causes a very high load on the motors.

**613 COMMAND NOT ALLOWED IN CUTTER COMPENSATION** - At least one command in the highlighted block cannot be executed while cutter compensation is active. Block Delete characters ('/') are not allowed. Your program must have a G40 and a cutter compensation exit move before these can be commanded.

**614 (M) V SERVO OVERLOAD** - Excessive load on V-axis motor. This can occur if the load on the motor over

a period of several seconds or even minutes is large enough to exceed the continuous rating of the motor. The servos will be turned off when this occurs. This can be caused by running into the mechanical stops or by anything that causes a very high load on the motors.

**615 (L) NO INTERSECTION TO OFFSETS IN CC** - While cutter comp was in effect, a geometry was encountered whose compensated paths had no solution given the tool offset used. This can occur when solving circular geometries. Correct the geometry or change the tool radius.

**615 (M) W SERVO OVERLOAD** - Excessive load on W-axis motor. This can occur if the load on the motor over a period of several seconds or even minutes is large enough to exceed the continuous rating of the motor. The servos will be turned off when this occurs. This can be caused by running into the mechanical stops or by anything that causes a very high load on the motors.

**616 (L) CANNED CYCLE USING P & Q IS ACTIVE** - A canned cycle using P & Q is already executing. A canned cycle cannot be executed by another PQ canned cycle.

**616 (M) U-AXIS MOTOR OVERHEAT** - Servo motor overheat. Temperature sensor in motor indicates over 150° F (65° C). Can be caused by overload of motor; such as leaving slide at stops for several minutes.

**617 (L) MISSING ADDRESS CODE** - A canned cycle using P & Q is already executing. A canned cycle cannot be executed by another PQ canned cycle.

**617 (M) V-AXIS MOTOR OVERHEAT** - Servo motor overheat. Temperature sensor in motor indicates over 150° F (65° C). Can be caused by overload of motor; such as leaving slide at stops for several minutes.

**618 (L) INVALID ADDRESS VALUE** - An address code is being used incorrectly; a negative value being used for an address code that should be positive. Refer to the documentation of the G code that causes the alarm.

**618 (M) W-AXIS MOTOR OVERHEAT** - Servo motor overheat. Temperature sensor in motor indicates over 150° F (65° C). Can be caused by overload of motor; such as leaving slide at stops for several minutes.

**619 (L) STROKE EXCEEDS START POSITION** - Stock removal stroke in canned cycle projects past start position. Change start position.

**620 C AXIS DISABLED** - Parameters have disabled this axis.

**621 C OVER TRAVEL RANGE** - C-axis will exceed stored stroke limits. This is a negative direction parameter and is machine zero in the positive direction. This will only occur during the operation of a user's program.

**622 (L) C AXIS ENGAGEMENT FAILURE** - The C-axis failed to engage or disengage in the time specified in Parameter 572. Either gears are not meshing or the mechanical stop is not set properly. Check the engage and disengage switches and the mechanical stop. Also, check the grid offset for the C-axis. This alarm can also be caused by an obstruction or by low air pressure to the actuating piston.

**622 (M) TOOL ARM FAULT** - This alarm is generated by the tool changer if the arm is not at the Origin position or the arm motor is already running when a tool change process is started.

**623 (L) INVALID CODE IN G112** - Only G0 to G3 and G17 are used in G112. G113 cancels G112. No incremental axes are used in G112. G18 cancels G17. G41 and G42 tool nose compensations are permitted.

**624 (L) COMMAND NOT ALLOWED IN G14 MODE** - G87 and G88 are not supported in G14 mode.

**625 (M) CAROUSEL POSITIONING ERROR** - The carousel was not on the pocket mark when expected or pocket one mark does not match up to the expected pocket one. This alarm is most likely the result of carousel motion interruption (by E-Stop, for example). Check for any carousel obstruction and then run tool changer recovery.

**626 (M) TOOL POCKET SLIDE ERROR** - The carousel pocket was not in the expected position or did not move to a commanded position as expected. Parameter 306 specifies the pocket motion timeout. Check for any carousel pocket motion obstruction and then run tool changer recovery.

**627 (M) ATC ARM MOTION** - Generated by the side mount disk type tool changer if the tool arm failed to move within the time specified by Parameter 309, Arm Start Timeout; if the tool arm failed to move to the designated position (origin, clamp, or unclamp) within the time specified by Parameter 308, Arm Rotate Time; or the tool pocket failed to move up or down within the time specified by Parameter 306, Pocket Up/Dn Delay.

**628 (M) ATC ARM POSITIONING ERROR** - This alarm is generated by the tool changer if:

- The arm was being moved from the Origin position to the Clamp position and it coasted past the Motor Stop point, or could not get to the Clamp point.
- The arm was being moved from the Clamp position to the Unclamp position and it coasted past the Motor Stop point or could not get to the Unclamp point (same physical point as Clamp).
- The arm was being moved back to the Origin position and it coasted past the Motor Stop point or could not get to the Origin point.
- Defective TRP solenoid valve assembly

**629 (L) EXCEEDED MAX FEED PER REV** - For G77, reduce diameter of part or change geometry. For G5, reduce X or Z travel.

**629 (M) APC-PIN CLEAR/HOME SWITCH FAULT** - A pin clear switch was contacted when all pallets were at their home positions. The most likely cause is debris on a switch. Check for accumulation of debris on the pin clear switches and the pallet home switches. Check switches and their electrical wiring for damage. After correcting the condition run M50 (with P code for the pallet to be loaded) to continue machining.

**630 (M) APC-DOOR SW FAULT-SWITCH NOT EQUAL TO SOLENOID** - The APC Door Switch indicates the door is open but the solenoid shows the door has been commanded to close. Either the door failed to close and is stuck or the switch itself is broken or stuck. The door switch wiring may also have a fault. Check switch then cable. After correcting the condition, run M50 to continue machining.

**631 (M) PALLET NOT CLAMPED** - Vertical Mills: APC-Pallet not clamped or home. Do not move X or Y axes until APC is in safe condition. One pallet is at home but the other is neither clamped nor at home. Locate the unclamped pallet and return to home if possible. If drive pin is engaged or pallet is partially clamped, go to the lube/air panel at rear of mill and continuously press both white buttons in center of solenoid air valves while assistant pulls the pallet off the receiver. After correcting the condition, run M50 to continue machining.

Horizontal Mills: RP-Pallet not clamped. RP pallet change was not completed or the pallet was not clamped properly when a spindle command was given. After correcting the condition, run M50 to continue machining.

**632 (M) APC-UNCLAMP ERROR** - The pallet did not unclamp in the amount of time allowed. This can be caused by a bad air solenoid, a blocked or kinked airline, or a mechanical problem. After correcting the condition, run M50 to continue machining. VF-APC: Discrete Input “M-Code Finish” or “Pallet Clamp SW” should change from 1 to zero when pallet is unclamped.

**633 (M) APC-CLAMP ERROR** - The pallet did not clamp in the amount of time allowed by Parameter 316. This alarm is most likely caused by the mill table not being in the correct position. This can be adjusted using the setting for the X position (#121, #125) as described in the ‘Installation’ section. If the pallet is in the correct position but not clamped, push the pallet against the hard stop and run M18. If the pallet is clamped, but not correctly, run M17 to unclamp, push the pallet to the correct position, and run M18 to clamp the pallet. Less common causes could be that the slip clutch is slipping, the motor is at fault, or an airline is blocked or kinked. After correcting the condition, run M50 to continue machining.

**634 (M) APC-MISLOCATED PALLET** - A pallet is not in the proper place on the APC. The pallet must be pushed back against the hard stop by hand. After correcting the condition, run M50 to continue machining.

**635 (M) APC-PAL NUM CONFLICT REC & CH** - Pallet Number Conflict Receiver and Pallet Changer: The pallet number in memory does not agree with the actual pallet in use. Run M50 to reset this variable.

**636 (M) APC UNLOAD-SWITCH MISSED PAL 1** - Pallet #1 did not return from the receiver to the APC in the

allowable amount of time. This can be caused by the chain switch block missing the limit switch, or another mechanical problem, such as clutch slippage. After correcting the condition, run M50 to continue machining.

**637 (M) APC UNLOAD-SWITCH MISSED PAL 2** - Pallet #2 did not return from the receiver to the APC in the allowable amount of time. This can be caused by the chain switch block missing the limit switch, or another mechanical problem, such as clutch slippage. After correcting the condition, run M50 to continue machining.

**638 (M) APC-DOOR NOT OPEN** - The automatic door did not open (in the allowable time), or may have fallen during an APC function. This can be caused by a bad air solenoid, a blocked or kinked airline, or a mechanical problem. After correcting the condition, run M50 to continue machining.

**639 (M) APC-DOOR NOT CLOSED** - The automatic door did not close (in the allowable time) when necessary after an APC function has been performed. This can be caused by a bad air solenoid, a blocked or kinked airline, or a mechanical problem. After correcting the condition, run M50 to continue machining.

**640 (M) APC-MISSING PALLET @ REC** - Pallet change sequence halted because receiver switch not activated. Pallet either unclamped or not on receiver. Ensure pallet is correctly located on receiver (against hard stop), then run M18 to clamp the pallet. After correcting the condition, run M50 to continue machining.

**641 (M) APC-UNKNOWN CHAIN LOCATION** - Neither chain location switch is tripped, so the control cannot locate the chain position. This can occur if a pallet change is interrupted for any reason; such as an alarm or an E-Stop. To correct this problem, the pallets and chain must be moved back into a recognized position, such as both pallets home or one pallet home and one on the receiver. The chain position adjustment tool must be used to rotate the chain into position. The pallets must be pushed into place by hand. After correcting the condition, run M50 to continue machining.

**642 (M) 642 APC-PIN CLEAR SWITCH FAULT** - One of the pallet changer pin clear switches was contacted unexpectedly. The most likely cause is debris on a switch. Also check the pin clear switches for damage and their electrical wiring for damage. After correcting the condition, run M50 to continue machining.

**643 (M) LOW BRAKE OIL A-AXIS** - The oil level in the air/oil booster, supplying hydraulic pressure to the A-axis brake, is low. The booster is located on the front of the machine's table. Access the booster fill fitting and add Mobile DTE 24 oil to bring the oil level to the high oil level line marked on the booster. If the alarm reoccurs within 90 days, contact your Haas Dealer for service.

**644 (M) APC-LOW AIR PRESSURE** - A low air pressure condition was detected during pallet changer operation. Check that the air supply is 100 psi, minimum. Check that the air supply line is the correct diameter. Check that the mill pressure regulator is set to 85 psi. If this alarm continues to occur, check the entire pressurized air system for any abnormal air leakage.

**645 AMPLIFIER GROUND** - Amplifier Ground Fault. A ground short was detected in the output of the amplifiers or spindle drive. This can be caused by a short to ground in the motor cables, servo or spindle motors. Check all cables and servo amplifiers, if the problem persists call your dealer. Cycle Power to Continue

**646 VAC INPUT PHASE** - VAC Input Phase Fault. A phase loss or drop of the frequency in the incoming AC line was detected. This occurs when the incoming frequency is lower than 45Hz or higher than 65Hz, or a power brownout. Check your incoming AC line. Cycle Power to Continue

**647 REGEN LOAD SHORTED** - A shorted Regen load condition was detected. This is caused by shorted cables on the regen load or shorted regen load elements. Check the connections, cables and resistance of your regen load. Cycle Power to Continue

**648 DC BUS SHORTED** - A shorted 320VDC bus condition was detected upon power-up. The DC bus monitor detected an improper charge-up. This can be caused by a shorted capacitor in 320V PS, shorted cable, shorted servo amplifier or shorted spindle drive. This can also be caused by a low incoming power. Check the Amplifier. Check the incoming AC lines. Cycle Power to Continue. This is only tested at power-up. If this fault occurs, it cannot be reset.

**649 DC BUS UNDER VOLTAGE** - The DC Bus voltage has dropped too low. This alarm occurs during charge

up with low AC lines or after charge up when the bus falls below 100VDC. Check the incoming AC lines to ensure nominal levels. If this fault occurs at power-up, it cannot be reset. If this fault occurs after power-up, it can be reset.

**650 DC BUS OVER VOLTAGE** - DC Bus Overvoltage. The DC bus voltage has been raised too high. The most common cause is an open Regen load and occurs during motor deceleration. It can also be caused by incoming AC power too high. Check Regen load connections and resistance. Check incoming AC lines to ensure nominal levels. Cycle Power to Continue

**651 (M) Z AXIS IS NOT ZEROED** - The Z-axis has not been zeroed. In order to continue Tool Change Recovery, the Z-axis must be zeroed. Once the Z-axis has been zeroed, continue with Tool Change Recovery.

**652 U ZERO RET MARGIN TOO SMALL** - This alarm will occur if the home/limit switches move or are misadjusted. This alarm indicates that the zero return position may not be consistent from one zero return to the next. The exncoder Z channel signal must occur between 1/8 and 7/8 revolution of where the home switch releases. This will not turn the servos off, but will stop the zero return operation.

**653 V ZERO RET MARGIN TOO SMALL** - This alarm will occur if the home/limit switches move or are misadjusted. This alarm indicates that the zero return position may not be consistent from one zero return to the next. The encoder Z channel signal must occur between 1/8 and 7/8 revolution of where the home switch releases. This will not turn the servos off, but will stop the zero return operation.

**654 W ZERO RET MARGIN TOO SMALL** - This alarm will occur if the home/limit switches move or are misadjusted. This alarm indicates that the zero return position may not be consistent from one zero return to the next. The encoder Z channel signal must occur between 1/8 and 7/8 revolution of where the home switch releases. This will not turn the servos off, but will stop the zero return operation.

**655 (L) MISMATCH AXIS WITH I, K CHAMFERING** - I, (K) was commanded as X-axis (Z-axis) in the block with chamfering.

**655 (M) U CABLE FAULT** - Cable from (axis) encoder does not have valid signals, incorrect motor selection, faulty cable, faulty connections or faulty motor. Check parameters to be sure that the mocon channel and encoder type parameters are correctly set. Check encoder cable connections at the mocon and motor. Check Cable. Check motor.

**656 (L) INVALID I, K, OR R IN G01** - The move distance in the block commanded with chamfering or corner rounding is less than the chamfering or corner rounding amount.

**656 (M) V CABLE FAULT** - Cable from (axis) encoder does not have valid signals, incorrect motor selection, faulty cable, faulty connections or faulty motor. Check parameters to be sure that the mocon channel and encoder type parameters are correctly set. Check encoder cable connections at the mocon and motor. Check Cable. Check motor.

**657 (L) NOT ONE AXIS MOVE WITH CHAMFERING** - Consecutive blocks commanded with chamfering or corner rounding, for example: G01 Xb Kk G01 Zb Ii. After each chamfering or corner rounding block, there must be a single move perpendicular to the one with chamfering or corner rounding.

**657 (M) W CABLE FAULT** - Cable from (axis) encoder does not have valid signals, incorrect motor selection, faulty cable, faulty connections or faulty motor. Check parameters to be sure that the mocon channel and encoder type parameters are correctly set. Check encoder cable connections at the mocon and motor. Check Cable. Check motor.

**658 (L) INVALID MOVE AFTER CHAMFERING** - The command after the block commanded with chamfering or corner rounding is either missing or wrong. There must be a move perpendicular to that of the chamfering or corner rounding block.

**658 (M) U PHASING ERROR** - Error occurred in phasing initialization of brushless motor. Can be caused by a bad encoder, or a cabling error.

**659 (L) NOT ONE AXIS MOVE WITH CHAMFERING** - Consecutive blocks commanded with chamfering or corner rounding, for example: G01 Xb Kk G01 Zb Ii. After each chamfering or corner rounding block, there must be a single move perpendicular to the one with chamfering or corner rounding.

**659 (M) V PHASING ERROR** - Error occurred in phasing initialization of brushless motor. Can be caused by a bad encoder, or a cabling error.

**660 (M) W PHASING ERROR** - Error occurred in phasing initialization of brushless motor. Can be caused by a bad encoder, or a cabling error.

**661 (M) U TRANSITION FAULT** - Illegal transition of count pulses in U-axis. This alarm usually indicates that the encoder has been damaged and encoder position data is unreliable. This can also be caused by loose MOCON or MOTIF PCB connectors.

**662 (M) V TRANSITION FAULT** - Illegal transition of count pulses in V-axis. This alarm usually indicates that the encoder has been damaged and encoder position data is unreliable. This can also be caused by loose MOCON or MOTIF PCB connectors.

**663 (M) W TRANSITION FAULT** - Illegal transition of count pulses in W-axis. This alarm usually indicates that the encoder has been damaged and encoder position data is unreliable. This can also be caused by loose MOCON or MOTIF PCB connectors.

**664 U AXIS DISABLED** - Parameter has disabled this axis.

**665 (L) V AXIS DISABLED** - Parameter has disabled bar feeder.

**665 (M) V AXIS DISABLED** - Parameter has disabled this axis.

**666 W AXIS DISABLED** - Parameter has disabled this axis.

**667 (M) U AXIS LINEAR SCALE Z FAULT** - Encoder marker pulse count failure. This alarm usually indicates that the Z Fault encoder has been damaged and encoder position data is unreliable. This can also be caused by loose scale connectors.

**668 (M) V AXIS LINEAR SCALE Z FAULT** - Encoder marker pulse count failure. This alarm usually indicates that the Z Fault encoder has been damaged and encoder position data is unreliable. This can also be caused by loose scale connectors.

**669 (M) W AXIS LINEAR SCALE Z FAULT** - Encoder marker pulse count failure. This alarm usually indicates that the Z Fault encoder has been damaged and encoder position data is unreliable. This can also be caused by loose scale connectors.

**670 (M) TT or B OVER TRAVEL RANGE** - Commanded TT or B-axis move would exceed the allowed machine range. Machine coordinates are in the negative direction. This condition indicates either an error in the user's program or improper offsets.

**671 (M) TT or B LIMIT SWITCH** - Axis hit limit switch or switch disconnected. The stored stroke limits should stop the slides before they hit the limit switches. Verify the value of Parameter 481, Grid Offset and check the wiring to the limit switch. Can also be caused by a loose encoder shaft at the back of the motor or the coupling of the motor to the screw.

**672 MULTIPLE O CODES DETECTED** - Multiple program O codes were detected in FNC file. Correct or delete the extra O codes.

**673 (M) TT SERVO ERROR TOO LARGE** - Too much load or speed on the TT axis motor. The difference between the motor position and the commanded position has exceeded Parameter 470. The motor may also be stalled, disconnected, or the driver failed. The servos will be turned off and a RESET must be done to restart. This alarm can be caused by problems with the driver, motor, or the slide being run into the mechanical stops.

**674 (M) TT SERVO OVERLOAD** - Excessive load on the TT axis motor. This can occur if the load on the motor over a period of several seconds or even minutes is large enough to exceed the continuous rating of the motor. The servos will be turned off when this occurs. This can be caused by running into the mechanical stops or by a very high load on the motors. If this alarm occurs on a machine with a VF-SS type tool changer, the most likely cause is a tool over 4 pounds (1.8 kg.) not identified as 'HEAVY' in the tool table.

**675 (M) TT AXIS MOTOR OVERHEAT** - Servo motor overheat. The temperature sensor in the motor indicates over 150 deg. F.(65.5 deg. C.) This can be caused by an extended overload of the motor; such as leaving the slide at the stops for several minutes.

**676 (M) TT MOTOR Z FAULT** - Encoder marker pulse count failure. This usually indicates that the encoder has been damaged and the encoder position data is unreliable, or the encoder connectors are loose.

**677 (M) TT AXIS Z CH MISSING** - The Z reference signal from the encoder was not received as expected. This can be caused by loose connections, encoder contamination, or parameter error.

**678 (M) TT B AXIS DRIVE FAULT** - The current in the TT servo motor is beyond the limit. This was possibly caused by a stalled or overloaded motor. The servos are turned off. This can be caused by running the axis into a mechanical stop, a short in the motor, or a short of one motor lead to ground.

**679 (M) TT ZERO RET MARGIN TOO SMALL** - This alarm will occur if the home/limit switches move or are misadjusted. This alarm indicates that the zero return position may not be consistent from one zero return to the next. The encoder Z channel signal must occur between 1/8 and 7/8 revolution of where the home switch releases. This will not turn the servos off, but will stop the zero return operation.

**680 (M) TT CABLE FAULT** - The cable from the TT axis encoder does not have valid differential signals.

**681 (M) TT PHASING ERROR** - An error occurred in the phasing initialization of the brushless motor. This can be caused by a bad encoder or a cabling error.

**682 (M) TT TRANSITION FAULT** - Illegal transition of count pulses in the TT axis. This alarm usually indicates that the encoder has been damaged and the encoder position data is unreliable. This can also be caused by loose MOCON connectors.

**683 (M) TT AXIS DISABLED** - Parameter has disabled this axis.

**684 (M) TT AXIS LINEAR SCALE Z FAULT** - An encoder marker pulse count failure has occurred. This alarm usually indicates that the Z fault encoder has been damaged and the encoder position data is unreliable. This can also be caused by loose scale connectors.

**685 (M) V MOTOR Z FAULT** - Encoder marker pulse count failure. It usually indicates that encoder has been damaged and encoder position data is unreliable. This can also be caused by loose encoder connectors.

**686 (M) W MOTOR Z FAULT** - Encoder marker pulse count failure. It usually indicates that encoder has been damaged and encoder position data is unreliable. This can also be caused by loose encoder connectors.

**687 (M) U MOTOR Z FAULT** - Encoder marker pulse count failure. It usually indicates that encoder has been damaged and encoder position data is unreliable. This can also be caused by loose encoder connectors.

**688 (M) U AXIS Z CH MISSING** - Z Reference signal from encoder was not received as expected. Can be caused by loose connections, encoder contamination, or parameter error.

**689 (M) V AXIS Z CH MISSING** - Z Reference signal from encoder was not received as expected. Can be caused by loose connections, encoder contamination, or parameter error.

**690 (M) W AXIS Z CH MISSING** - Z Reference signal from encoder was not received as expected. Can be caused by loose connections, encoder contamination, or parameter error.

**691 (M) U AXIS DRIVE FAULT** - Current in U servo motor beyond limit. Possibly caused by a stalled or overloaded motor. The servos are turned off. This can be caused by running the axis into a mechanical stop, a

short in the motor, or a short of one motor lead to ground.

**692 (M) V AXIS DRIVE FAULT** - Current in V servo motor beyond limit. Possibly caused by a stalled or overloaded motor. The servos are turned off. This can be caused by running the axis into a mechanical stop, a short in the motor, or a short of one motor lead to ground.

**693 (M) W AXIS DRIVE FAULT** - Current in W servo motor beyond limit. Possibly caused by a stalled or overloaded motor. The servos are turned off. This can be caused by running the axis into a mechanical stop, a short in the motor or a short of one motor lead to ground.

**694 (M) ATC SWITCH FAULT** - Conflicting switch states detected; such as simultaneous shuttle in and out, SMTC pocket up and down, or SMTC tool arm at origin and at clamp position. Check for damaged or sticking switches, damaged wiring, or debris buildup. Use Tool Changer Restore to recover the ATC, then resume normal operation.

**695 (M) ATC DOUBLE-ARM CYLINDER TIME OUT** - ATC double arm did not completely extend or retract within time allowed by Parameter 61. Check for proper spindle orientation, correct alignment of double arm with chain or spindle, adequate air supply, mechanism binding, air leakage, excessive tool weight, debris build up, adequate chain tension, correct chain guide strip adjustment, and interference between tool holder set screw and chain or tool gripper. Use Tool Changer Restore to recover ATC, then resume normal operation.

**696 (M) ATC MOTOR TIME OUT** - The ATC shuttle motor or double arm motor failed to complete the commanded movement within the time allowed by Parameter 60. Check for mechanism binding, correct motor and switch operation, damaged gear motor control board relays, damaged electrical wiring, or blown fuses on the gear motor control board. Use Tool Changer Restore to recover the ATC, then resume normal operation.

**697 (M) ATC MOTOR FAULT** - The ATC shuttle motor or double arm motor was on unexpectedly. Use Tool Changer Restore to recover the ATC, then resume normal operation.

**698 (M) ATC PARAMETER ERROR** - The ATC type cannot be determined. Check Parameter 278, bit 10, HS3 HYD TC, or Parameter 209, bit 2, Chain TC, as appropriate for the installed tool changer. Use Tool Changer Restore to recover the ATC, then resume normal operation.

**699 FPU OPERR ERROR** - A BSUN exception has occurred on the floating point unit. The execution address where this occurred can be found in the FPE ERR field of the LL DEBUG screen.

**700 TOOL CAROUSEL AXIS NOT STOPPED** - The internal software detected unexpected movement of the tool carousel. If this alarm persist contact your service representative.

**701 (L) U SERVO ERROR TOO LARGE MOCON2** - Too much load or speed on U-axis motor. Difference between motor position and commanded position has exceeded Parameter 362. The motor may also be stalled, disconnected, or the driver failed. The servos will be turned off and a Reset must be done to restart. This alarm can be caused by problems with the driver, motor, or the slide being run into the mechanical stops.

**702 (L) V SERVO ERROR TOO LARGE** - Too much load or speed on bar feeder motor. The difference between motor position and commanded position has exceeded Parameter 398. The motor may also be stalled, disconnected, or the driver failed. The servos will be turned off and a Reset must be done to restart. This alarm can be caused by problems with the driver, motor, or the slide being run into the mechanical stops.

**703 (L) W SERVO ERROR TOO LARGE MOCON2** - Too much load or speed on W-axis motor. Difference between motor position and commanded position has exceeded Parameter 434. The motor may also be stalled, disconnected, or the driver failed. The servos will be turned off and a Reset must be done to restart. This alarm can be caused by problems with the driver, motor, or the slide being run into the mechanical stops.

**704 (L) Sp SERVO ERROR TOO LARGE** - Too much load or speed on Sp-axis motor. The difference between motor position and commanded position has exceeded Parameter 184. The motor may also be stalled, disconnected, or the driver failed. The servos will be turned off and a Reset must be done to restart. This alarm can be caused by problems with the driver, motor, or the slide being run into the mechanical stops.

**705 (L) Tt SERVO ERROR TOO LARGE MOCON2** - Too much load or speed on Tt-axis motor. Difference between motor position and commanded position has exceeded Parameter 470. The motor may also be stalled, disconnected, or the driver failed. The servos will be turned off and a Reset must be done to restart. This alarm can be caused by problems with the driver, motor, or the slide being run into the mechanical stops.

**706 (L) Ss SERVO ERROR TOO LARGE MOCON2** - Too much load or speed on Ss-axis motor. Difference between motor position and commanded position has exceeded Parameter 542. The motor may also be stalled, disconnected, or the driver failed. The servos will be turned off and a Reset must be done to restart. This alarm can be caused by problems with the driver, motor, or the slide being run into the mechanical stops.

**709 J SERVO ERROR TOO LARGE MOCON1** - Too much load or speed on J-channel motor. The difference between the motor position and the commanded position has exceeded a parameter. The motor may also be stalled, disconnected, or the driver failed. The servos will be turned off and a RESET must be done to restart. This alarm can be caused by problems with the driver, motor, or the axis running into the mechanical stops.

**710 (M) S SERVO ERROR TOO LARGE MOCON1** - Too much load or speed on S-channel motor. The difference between the motor position and the commanded position has exceeded a parameter. The motor may also be stalled, disconnected, or the driver failed. The servos will be turned off and a RESET must be done to restart. This alarm can be caused by problems with the driver, motor, or the axis running into the mechanical stops.

**711 (L) U SERVO OVERLOAD MOCON2** - Excessive load on U-axis motor. This can occur if the load on the motor over a period of several seconds or even minutes is large enough to exceed the continuous rating of the motor. The servos will be turned off when this occurs. This can be caused by running into the mechanical stops but not much past them. It can also be caused by anything that causes a very high load on the motors.

**712 (L) V SERVO OVERLOAD** - Excessive load on bar feeder motor. This can occur if the load on the motor over a period of several seconds or even minutes is large enough to exceed the continuous rating of the motor. The servos will be turned off when this occurs. This can be caused by running into the mechanical stops but not much past them. It can also be caused by anything that causes a very high load on the motors.

**713 (L) W SERVO OVERLOAD MOCON2** - Excessive load on W-axis motor. This can occur if load on the motor over a period of several seconds or even minutes is large enough to exceed the continuous rating of the motor. The servos will be turned off when this occurs. This can be caused by running into the mechanical stops but not much past them. It can also be caused by anything that causes a very high load on the motors.

**714 (L) Sp SERVO OVERLOAD** - Excessive load on Sp-axis motor. This can occur if the load on the motor over a period of several seconds or even minutes is large enough to exceed the continuous rating of the motor. The servos will be turned off when this occurs. This can be caused by running into the mechanical stops but not much past them. It can also be caused by anything that causes a very high load on the motors.

**715 (L) Tt SERVO OVERLOAD MOCON2** - Excessive load on Tt-axis motor. This can occur if the load on the motor over a period of several seconds or even minutes is large enough to exceed the continuous rating of the motor. The servos will be turned off when this occurs. This can be caused by running into the mechanical stops but not much past them. It can also be caused by anything that causes a very high load on the motors.

**716 (L) Ss SERVO OVERLOAD MOCON2** - Excessive load on Ss-axis motor. This can occur if load on the motor over a period of several seconds or even minutes is large enough to exceed the continuous rating of the motor. The servos will be turned off when this occurs. This can be caused by running into the mechanical stops but not much past them. It can also be caused by anything that causes a very high load on the motors.

**721 (L) U-AXIS MOTOR OVERHEAT MOCON2** - Servo motor overheat. Sensor in motor indicates over 150° F (65° C). Can be caused by motor overload; such as leaving slide at stops for several minutes.

**722 (L) V-AXIS MOTOR OVERHEAT** - Servo motor overheat. Sensor in motor indicates over 150° F (65° C). Can be caused by motor overload; such as leaving slide at stops for several minutes.

**723 (L) W-AXIS MOTOR OVERHEAT MOCON2** - Servo motor overheat. Sensor in motor indicates over 150° F (65° C). Can be caused by motor overload; such as leaving slide at stops for several minutes.

**724 (L) Sp MOTOR OVERHEAT** - Servo motor overheat. Sensor in motor indicates over 150° F (65° C). Can be caused by motor overload; such as leaving slide at stops for several minutes.

**725 (L) Tt MOTOR OVER HEAT MOCON2** - Servo motor overheat. Sensor in motor indicates over 150° F (65° C). Can be caused by motor overload; such as leaving slide at stops for several minutes.

**726 (L) Ss MOTOR OVER HEAT MOCON2** - Servo motor overheat. Sensor in motor indicates over 150° F (65° C). Can be caused by motor overload; such as leaving slide at stops for several minutes.

**728 (L) SPINDLE OVERHEAT** - Servo motor overheat. The temperature sensor in the motor indicates over 150 deg. F (65.5deg.C.). This can be caused by an extended overload of the motor; such as leaving the slide at the stops for several minutes.

**729 (L) LT OVER TRAVEL RANGE** - Commanded LT-axis move would exceed machine travel. Machine co-ordinates are in the negative direction. This indicates either an error in the user's program or improper offsets.

**731 (L) U MOTOR Z FAULT MOCON2** - Encoder marker pulse count failure. Usually indicates encoder is damaged and encoder position data is unreliable. This can also be caused by loose encoder connectors.

**732 (L) V MOTOR Z FAULT** - Encoder marker pulse count failure. Usually indicates encoder is damaged and encoder position data is unreliable. This can also be caused by loose encoder connectors.

**733 (L) W MOTOR Z FAULT MOCON2** - Encoder marker pulse count failure. Usually indicates encoder is damaged and encoder position data is unreliable. This can also be caused by loose encoder connectors.

**734 (L) Sp MOTOR Z FAULT** - Encoder marker pulse count failure. Usually indicates encoder is damaged and encoder position data is unreliable. This can also be caused by loose encoder connectors.

**735 (L) Tt MOTOR Z FAULT MOCON2** - Encoder marker pulse count failure. Usually indicates encoder is damaged and encoder position data is unreliable. This can also be caused by loose encoder connectors.

**736 (L) Ss MOTOR Z FAULT MOCON2** - Encoder marker pulse count failure. Usually indicates encoder is damaged and encoder position data is unreliable. This can also be caused by loose encoder connectors.

**741 (L) U AXIS Z CH MISSING MOCON2** - Z reference signal from encoder was not received as expected. Can be caused by loose connections, encoder contamination, or parameter error.

**742 (L) V AXIS Z CH MISSING** - Z reference signal from encoder was not received as expected. Can be caused by loose connections, encoder contamination, or parameter error.

**743 (L) W AXIS Z CH MISSING MOCON2** - Z reference signal from encoder was not received as expected. Can be caused by loose` connections, encoder contamination, or parameter error.

**744 (L) Sp AXIS Z CH MISSING** - Z reference signal from encoder was not received as expected. Can be caused by loose connections, encoder contamination, or parameter error.

**745 (L) Tt AXIS Z CH MISSING MOCON2** - Z reference signal from encoder was not received as expected. Can be caused by loose connections, encoder contamination, or parameter error.

**746 (L) Ss AXIS Z CH MISSING MOCON2** - Z reference signal from encoder was not received as expected. Can be caused by loose connections, encoder contamination, or parameter error.

**751 (L) U AXIS DRIVE FAULT MOCON2** - Current in U servo motor beyond limit. Possibly caused by a stalled or overloaded motor. The servos are turned off. This can be caused by running the axis into a mechanical stop. It can also be caused by a short in the motor or a short of one motor lead to ground.

**752 (L) V AXIS DRIVE FAULT** - Current in bar feeder motor beyond limit. Possibly caused by a stalled or overloaded motor. The servos are turned off. This can be caused by running the axis into a mechanical stop. It can also be caused by a short in the motor or a short of one motor lead to ground.

**753 (L) W AXIS DRIVE FAULT MOCON2** - Current in W servo motor beyond limit. Possibly caused by a stalled or overloaded motor. The servos are turned off. This can be caused by running the axis into a mechan-

ical stop. It can also be caused by a short in the motor or a short of one motor lead to ground.

**754 (L) Sp AXIS DRIVE FAULT** - Current in Sp servo motor beyond limit. Possibly caused by a stalled or overloaded motor. The servos are turned off. This can be caused by running the axis into a mechanical stop. It can also be caused by a short in the motor or a short of one motor lead to ground.

**755 (L) Tt AXIS DRIVE FAULT MOCON2** - Current in Tt servo motor beyond limit. Possibly caused by a stalled or overloaded motor. The servos are turned off. This can be caused by running the axis into a mechanical stop. It can also be caused by a short in the motor or a short of one motor lead to ground.

**756 Ss AXIS DRIVE FAULT MOCON2** - Current in Ss servo motor beyond limit. Possibly caused by a stalled or overloaded motor. The servos are turned off. This can be caused by running the axis into a mechanical stop. It can also be caused by a short in the motor or a short of one motor lead to ground.

**761 (L) U CABLE FAULT MOCON2** - Cable from U-axis encoder does not have valid differential signals.

**762 (L) V CABLE FAULT** - Cable from bar feeder encoder does not have valid differential signals.

**763 (L) W CABLE FAULT MOCON2** - The cable from the W axis encoder does not have valid differential signals.

**764 (L) Sp CABLE FAULT** - Cable from spindle motor encoder does not have valid differential signals.

**765 (L) Tt CABLE FAULT MOCON2** - Cable from Tt-axis encoder does not have valid differential signals.

**766 (L) Ss CABLE FAULT MOCON2** - Cable from Ss-axis encoder does not have valid differential signals.

**771 (L) U PHASING ERROR MOCON2** - Error occurred in phasing initialization of brushless motor. This can be caused by a bad encoder, or a cabling error.

**772 (L) V PHASING ERROR** - Error occurred in phasing initialization of brushless motor. This can be caused by a bad encoder, or a cabling error.

**773 (L) W PHASING ERROR MOCON2** - Error occurred in phasing initialization of brushless motor. This can be caused by a bad encoder, or a cabling error.

**774 (L) Sp PHASING ERROR** - Error occurred in phasing initialization of brushless motor. This can be caused by a bad encoder, or a cabling error.

**775 (L) Tt PHASING ERROR MOCON2** - Error occurred in phasing initialization of brushless motor. This can be caused by a bad encoder, or a cabling error.

**776 (L) Ss PHASING ERROR MOCON2** - Error occurred in phasing initialization of brushless motor. This can be caused by a bad encoder, or a cabling error.

**781 (L) U TRANSITION FAULT MOCON2** - Illegal transitions of count pulses in U-axis. This alarm usually indicates that the encoder has been damaged and encoder position data is unreliable. This can also be caused by loose connectors at the MOCON or MOTIF printed circuit board.

**782 (L) V TRANSITION FAULT** - Illegal transition of count pulses in bar feeder. This alarm usually indicates that the encoder has been damaged and encoder position data is unreliable. This can also be caused by loose connectors at the MOCON or MOTIF printed circuit board.

**783 (L) W TRANSITION FAULT MOCON2** - Illegal transition of count pulses in W-axis. This alarm usually indicates that the encoder has been damaged and encoder position data is unreliable. This can also be caused by loose connectors at the MOCON or MOTIF printed circuit board.

**784 (L) SP MOT ENC TRANSITION FAULT** - Illegal transition of count pulses in Sp-axis. This alarm usually indicates that the encoder on the spindle motor has been damaged and encoder position data is unreliable. This can also be caused by loose connectors at the MOCON or MOTIF printed circuit board.

**785 (L) Tt TRANSITION FAULT MOCON2** - Illegal transition of count pulses in Tt-axis. This alarm usually in-

dicates that the encoder has been damaged and encoder position data is unreliable. This can also be caused by loose connectors at the MOCON or MOTIF printed circuit board.

**786 (L) Ss TRANSITION FAULT MOCON2** - Illegal transition of count pulses in Ss-axis. This alarm usually indicates that the encoder has been damaged and encoder position data is unreliable. This can also be caused by loose connectors at the MOCON or MOTIF printed circuit board.

**791 COMMUNICATION FAILURE WITH MOCON2** - During a self-test of communications between the MOCON2 and the main processor, the main processor did not respond, and one of them is possibly bad. Check the cable connections and the boards. This alarm could also have been caused by a memory fault, which was detected on the MOCON2.

**792 MOCON2 WATCHDOG FAULT** - The self-test of the MOCON2 has failed. Call your dealer.

**794 (L) LT Zero Ret Margin Too Small** - This alarm will occur if the home/limit switches move or are misadjusted. This alarm indicates that the zero return position may not be consistent from one zero return to the next. The encoder Z channel signal must occur between 1/8 and 7/8 revolution of where the home switch releases. This will not turn the servos off but will stop the zero return operation.

**795 (L) LT Limit Switch** - Axis hit limit switch or switch disconnected. Home switch input changed state while machine was in use. Stored stroke limits should stop the slides before they hit the limit switches. Verify the value of Parameter 481, Grid Offset, and check the wiring to the limit switch. Can also be caused by a loose encoder shaft at the back of the motor or coupling of motor to the screw. LT limit switch may need replacement.

**796 (L) SUB SPINDLE NOT TURNING** - Status from subspindle drive indicates it is not at speed when expected. This can also be caused by commanding a feed when the spindle is stopped.

**797 (L) SUB SPINDLE ORIENTATION FAULT** - Spindle did not orient correctly. During a spindle orientation function, the spindle rotated but never achieved proper orientation. This can be caused by failure of encoder, cables, belts, MOCON or vector drive.

**799 UNKNOWN MOCON2 ERROR** - Check for loose MOCON cable connections. See MOCON software service notes for additional diagnostics.

**800 (L) P AND Q EXCEEDED MEMORY** - Too many blocks were placed between the P and Q blocks for the G71, G72 or G73. Reduce the amount to correct.

**801 (L) NO BLOCK DELETES BETWEEN P AND Q** - Block delete is not allowed between the P and Q blocks of a G71, G72 or G73.

**802 NEGATIVE R AND C VALUES NOT ALLOWED** - Negative values are not allowed when using the ,C ,R corner rounds and chamfering.

**803 LOW WAY LUBE** - The way lubrication grease supply is low or empty or the lubrication system has lost pressure. Check the grease canister to see if it is low and replace if necessary. If the grease canister is not empty, check if the lines to the ways are clogged or damaged. Also check the lubrication pressure switch and wires for disconnect or damage. If the problem is not corrected, further operation could result in machine damage.

**804 GREASE CANISTER IS EMPTY** - The grease supply is empty or the lubrication system has lost pressure. Replace the grease canister or check if the lubrication lines are clogged or damaged. Further operation without correcting the problem will result in machine damage.

**805 LOW SPINDLE LUBRICATION** - The spindle lubrication oil reservoir level is low. Service the spindle lubrication reservoir by adding oil. If the reservoir oil level is okay, check the reservoir level sensor switch for proper operation or damage. Check the switch wires for damage or disconnect.

**807 NO SUPPORTING FONT FOUND FOR LANGUAGE SELECTED** - Control will revert to English.

**808 AUTOMATIC PROBE ARM FAULT** - Automatic probe arm failed to complete command to extend or retract. Check for tools or parts in machining area that block motion of probe arm. Check for sufficient air pressure and volume. Check probe arm mechanism for broken parts, damaged air lines, or broken electrical connections. After resolving problem, command the probe arm to the home position and continue operation.

**809 PROBE ARM SWITCH FAULT** - A switch fault was detected in the automatic probe arm system. For example, the switch signals indicated both switches simultaneously, or one of the switches indicates an unexpected position. Check the switches and trip flags for damage and the switch wiring for damage. After resolving the problem, command the probe arm to the home position and continue operation.

**810 PROBE ARM CHUCK CONFLICT** - There must be no part in the chuck when the automatic probe arm is lowered (extended). Unclamp the spindle chuck, remove the part and then continue operation.

**811 AXIS MOCON CHANNELS INITIALIZED** - During power up, the system detected an incorrectly assigned mocon channel. Any invalid mocon channel assignments were set to default values. Confirm the mocon channel assignment for all of the axes.

**812 PROBE ARM NOT DOWN** - The probe arm is not in position for the operation. Enter the probe menu by pressing MDI/DNC and then PRGRM CONVRS, and selecting the Probe tab. Press F1 to lower the probe arm.

**813 PROBE NOT CALIBRATED** - The probe must be calibrated using the described Tool Probe Calibration procedure, (Auto Tool Setting Probe Operation Guide).

**814 NO TOOL OFFSET** - A tool offset must be defined before the automatic mode can be used. See the Manual Mode section of the manual for more information.

**815 ILLEGAL TOOL OFFSET NUMBER** - Tool offset T0 is not allowed. If using the T code on the cycle call line check that the value is not zero. Also this alarm may occur if no tool or tool offset was selected in MDI before running the cycle. CAUTION: Make sure the turret is safely away from the tool probe before indexing the turret.

**816 (L) ILLEGAL TOOL NOSE VECTOR** - Only vector numbers 1 through 8 are allowed. See the “Tool Tip Direction” section of the operator’s manual for more information.

**817 TOOL PROBE OPEN** - This alarm occurs when the probe is in an unexpected open (triggered) condition. Make sure the tool is not in contact with the probe before beginning an operation.

**818 TOOL PROBE FAILURE** - This alarm occurs when the tool fails to contact the probe within the defined travel. Check that the probe has been calibrated. In manual probe mode, jog the tool tip to within 0.25 inches (6 mm) of the probe.

**819 BROKEN TOOL** - This alarm is generated when the tool length error exceeds the defined tolerance. Check and replace the tool or define the correct tolerance.

**820 (M) COUNTER BALANCE FAILURE** - A low pressure condition was detected from the hydraulic counter balance system. Machine may be equipped with one or two counter balance systems. The most probable cause is low nitrogen or hydraulic oil. If the pressure is correct check the pressure switch and wiring for proper function. The machine will not operate until the problem has been corrected.

**822 (L) INVALID AUTO DOOR COMMAND** - The Auto Door was commanded to open while in the process of closing or was commanded to close while in the process of opening. This could occur if the Auto Door button was pressed while an M85 or M86 was in progress, or while the door was closing for cycle start, or opening for M30 or M00. To continue operation, press reset to clear alarms and avoid pressing the Auto Door button while the door is moving automatically.

**822 (M) INVALID AUTO DOOR COMMAND** - The Auto Door was commanded to open while in the process of closing or was commanded to close while in the process of opening. This could occur if the Auto Door button was pressed while an M80 or M81 was in progress, or while the door was closing for cycle start, or opening for M30 or M00. To continue operation, press reset to clear alarms and avoid pressing the Auto Door button while the door is moving automatically.

**823 (L) SERVO AUTO DOOR STOPPED** - The Auto Door did not open or close completely due to an obstruction. The most common causes are an object blocking door motion and chip build up on the door guide rails. Check for these problems first. A less likely cause is that the door is out of adjustment. Once the cause of this fault is determined normal operation can continue. Note: this alarm only occurs with M85 and M86, but not with the door button.

**823 (M) SERVO AUTO DOOR STOPPED** - The Auto Door did not open or close completely due to an obstruction. The most common causes are an object blocking door motion and chip build up on the door guide rails. Check for these problems first. A less likely cause is that the door is out of adjustment. Once the cause of this fault is determined normal operation can continue. Note: this alarm only occurs with M80 and M81, but not with the door button.

**824 (L) SERVO AUTO DOOR OPERATION FAULT** - The Auto Door did not open or close completely. The most probable cause is an obstruction near the door opened or door closed position. Less likely reasons are that the door or door switch is out of adjustment, or the door is set up incorrectly. If the door is hitting the hard stop at the opened position, parameter 825 may need adjustment. If the door is hitting the hard stop at the closed position parameter 211 may need adjustment. Note that an adjustment to parameter 211 may require an equivalent adjustment to parameter 825. Once the cause of this failure is determined normal operation can be resumed. Note: this alarm only occurs with M85 and M86, but not with the door button.

**824 (M) SERVO AUTO DOOR OPERATION FAULT** - The Auto Door did not open or close completely. The most probable cause is an obstruction near the door opened or door closed position. Less likely reasons are that the door or door switch is out of adjustment, or the door is set up incorrectly. If the door is hitting the hard stop at the opened position, parameter 825 may need adjustment. If the door is hitting the hard stop at the closed position parameter 379 may need adjustment. Note that an adjustment to parameter 379 may require an equivalent adjustment to parameter 825. Once the cause of this failure is determined normal operation can be resumed. Note: this alarm only occurs with M80 and M81, but not with the door button.

**825 FRONT PANEL INTERFACE FAULT - CRC ERROR** - This alarm would occur when there is a communication error between the SKBIF (serial keyboard interface) and the main control or the RJH-C (color remote jog handle) and the main control. It may be due to a lose cable or bad connector.

**826 INTERNAL MOCON 1 FAULT** - Check the mocon power supply; if it is adequate, the mocon board must be replaced.

**827 INTERNAL MOCON 2 FAULT** - Check the mocon power supply; if it is adequate, the mocon board must be replaced.

**828 X AXIS SERIAL DATA COMMUNICATION FAULT** - Check that the cable from the mocon to the indicated axis encoder is undamaged and securely connected. A serial communications fault has occurred between the indicated encoder and the mocon. This is most commonly due to a loose connector or a bad cable between the mocon and the encoder. Check the cable and connections. If the problem persists, check the motor.

**829 Y AXIS SERIAL DATA COMMUNICATION FAULT** - Check that the cable from the mocon to the indicated axis encoder is undamaged and securely connected. A serial communications fault has occurred between the indicated encoder and the mocon. This is most commonly due to a loose connector or a bad cable between the mocon and the encoder. Check the cable and connections. If the problem persists, check the motor.

**830 Z AXIS SERIAL DATA COMMUNICATION FAULT** - Check that the cable from the mocon to the indicated axis encoder is undamaged and securely connected. A serial communications fault has occurred between the indicated encoder and the mocon. This is most commonly due to a loose connector or a bad cable between the mocon and the encoder. Check the cable and connections. If the problem persists, check the motor.

**831 A AXIS SERIAL DATA COMMUNICATION FAULT** - Check that the cable from the mocon to the indicated axis encoder is undamaged and securely connected. A serial communications fault has occurred between the indicated encoder and the mocon. This is most commonly due to a loose connector or a bad cable between the mocon and the encoder. Check the cable and connections. If the problem persists, check the motor.

**832 B AXIS SERIAL DATA COMMUNICATION FAULT** - Check that the cable from the mocon to the indicated axis encoder is undamaged and securely connected. A serial communications fault has occurred between the indicated encoder and the mocon. This is most commonly due to a loose connector or a bad cable between the mocon and the encoder. Check the cable and connections. If the problem persists, check the motor.

**833 C AXIS SERIAL DATA COMMUNICATION FAULT** - Check that the cable from the mocon to the indicated axis encoder is undamaged and securely connected. A serial communications fault has occurred between the indicated encoder and the mocon. This is most commonly due to a loose connector or a bad cable between the mocon and the encoder. Check the cable and connections. If the problem persists, check the motor.

**834 U AXIS SERIAL DATA COMMUNICATION FAULT** - Check that the cable from the mocon to the indicated axis encoder is undamaged and securely connected. A serial communications fault has occurred between the indicated encoder and the mocon. This is most commonly due to a loose connector or a bad cable between the mocon and the encoder. Check the cable and connections. If the problem persists, check the motor.

**835 V AXIS SERIAL DATA COMMUNICATION FAULT** - Check that the cable from the mocon to the indicated axis encoder is undamaged and securely connected. A serial communications fault has occurred between the indicated encoder and the mocon. This is most commonly due to a loose connector or a bad cable between the mocon and the encoder. Check the cable and connections. If the problem persists, check the motor.

**836 W AXIS SERIAL DATA COMMUNICATION FAULT** - Check that the cable from the mocon to the indicated axis encoder is undamaged and securely connected. A serial communications fault has occurred between the indicated encoder and the mocon. This is most commonly due to a loose connector or a bad cable between the mocon and the encoder. Check the cable and connections. If the problem persists, check the motor.

**837 SP AXIS SERIAL DATA COMMUNICATION FAULT** - Check that the cable from the mocon to the indicated axis encoder is undamaged and securely connected. A serial communications fault has occurred between the indicated encoder and the mocon. This is most commonly due to a loose connector or a bad cable between the mocon and the encoder. Check the cable and connections. If the problem persists, check the motor.

**838 TT AXIS SERIAL DATA COMMUNICATION FAULT** - Check that the cable from the mocon to the indicated axis encoder is undamaged and securely connected. A serial communications fault has occurred between the indicated encoder and the mocon. This is most commonly due to a loose connector or a bad cable between the mocon and the encoder. Check the cable and connections. If the problem persists, check the motor.

**839 SS AXIS SERIAL DATA COMMUNICATION FAULT** - Check that the cable from the mocon to the indicated axis encoder is undamaged and securely connected. A serial communications fault has occurred between the indicated encoder and the mocon. This is most commonly due to a loose connector or a bad cable between the mocon and the encoder. Check the cable and connections. If the problem persists, check the motor.

**844 PRESSURE SENSOR DID NOT DETECT GREASE TO VERTICAL AXIS** - Check that the grease reservoir has grease. Check for leak at the master distribution manifold. Check for kinked or damaged hoses. Using diagnostics page, see if the Ax Grease Pressure input changes state, from no pressure, to high pressure during lubrication cycle.

**845 GREASE RESERVOIR IS EMPTY. FOLLOW REFILL PROCEDURE** - Verify that the grease reservoir is empty, follow grease reservoir refill REFILL procedure. If reservoir is not empty, check for any obstructions at

the master distribution manifold and entire vertical axis grease hose.

**846 PRESSURE SWITCH NOT CHANGING STATE** - Verify that there is grease in the reservoir. Using diagnostics screen, with no pressure present in the hoses, verify that input Ax Grease Pressure, shows no pressure. Manually activate the solenoid at the reservoir for 15 seconds and verify that input Ax Grease Pressure, shows high pressure. Check for a change in input state if switch is manually shorted. If the above condition is not met, the pressure switch probably needs replacement. Also check switch cable/harness for damage, broken or peeled cables.

**847 REMOTE JOG HANDLE LOW VOLTAGE** - This alarm occurs when a low voltage fault condition is detected on the remote jog handle when the utility light is ON. In this case, the utility light has been turned OFF by the hardware to prevent the remote jog handle from resetting. The most likely cause of this fault condition is high resistance in the coil cord connecting the jog handle to the control. Replace the coil cord. Until the cord is replaced do not use the utility light. Another cause could be the low volt power supply in the control cabine. Verify that the power supply voltage is above 11V.

**848 160V DC BUS LINE OVERVOLTAGE** - The voltage of both the 160V and 320V DC buses have exceeded the maximum limit. This is probably caused by high incoming line voltage or an improperly tapped main transformer. If this condition persists, an automatic shutdown will begin after the interval as specified by parameter 296.

**849 160V DC BUS OVERVOLTAGE** - - The 160V DC bus on the I/O board was above 215VDC when a DC motor was commanded ON while the 320V bus was at normal levels. This is caused by either incorrect parameter values or by a damaged I/O board. Check for correct transformer tapping prior to replacing any boards.

**850 INTERNAL IO ERROR** - The IOPCB tool changer circuit has been reset. The I/O board may need to be replaced.

**851 (M) ATC ARM MOTOR HIGH LOAD** - The ATC arm motor has had a high load (at or near stall) for less than one second. Check for objects preventing the arm from completing its motion and check for any mechanical bind; then run tool changer recovery.

**852 (M) ATC CAROUSEL MOTOR HIGH LOAD** - The ATC carousel motor has had a high load (at or near stall) for less than one second. Check for objects preventing the arm from completing its motion and check for any mechanical bind; then run tool changer recovery. This can be caused by a jammed motor gearbox.

**853 (M) ATC SHUTTLE MOTOR HIGH LOAD** - The ATC shuttle motor has had a high load (at or near stall) for less than one second. Check for objects preventing the arm from completing its motion and check for any mechanical bind; then run tool changer recovery. This can be caused by a jammed motor gearbox.

**854 (M) ATC CAROUSEL DRIVE TRAIN FAILURE** - The carousel was commanded to move and either it did not leave the current pocket as expected or it did not reach the next pocket as expected. Parameters 60 and 61, respectively, control the timeout for these two conditions. Electrical current was detected to the motor so this may be caused by a failure in the drive train system, i.e. motor, gearbox, chain, belt, switch, etc.

**855 (M) ATC ARM DRIVE TRAIN FAILURE** - The ATC arm motor failed to move from the switch after power was applied to the motor and the I/O board sensed current. This is likely caused by a failure in the drive train system, i.e. motor, gearbox, chain, belt, switch, etc.

**856 (M) ATC SHUTTLE DRIVE TRAIN FAILURE** - The ATC shuttle motor failed to move from the switch after power was applied to the motor and the I/O board sensed current. This is likely caused by a failure in the drive train system, i.e. motor, gearbox, chain, belt, switch, etc.

**857 (M) ATC ARM MOTOR ELECTRICAL FAULT** - No motor current was measured after the ATC arm motor was commanded on. This is caused by a break in the motor current loop indicating a failed motor, motor cable or I/O board drive circuitry.

**858 (M) ATC CAROUSEL MOTOR ELECTRICAL FAULT** - No motor current was measured after the ATC

carousel motor was commanded on. This is caused by a break in the motor current loop indicating a failed motor, motor cable or I/O board drive circuitry.

**859 (M) ATC SHUTTLE MOTOR ELECTRICAL FAULT** - No motor current was measured after the ATC shuttle motor was commanded on. This is caused by a break in the motor current loop indicating a failed motor, motor cable or I/O board drive circuitry.

**860 160V DC BUS SHORT CIRCUIT** - The I/O board has sensed a short in the 160V DC bus. This can be caused by a failed I/O board relay (K9 – K12) or the I/O board itself. Check relays K9-K12 and replace as needed. If the problem persists, replace the I/O board.

**861 (L) SPINDLE SYNCH ERROR HAS EXCEEDED LIMIT** - During G199, spindle synchronization, the control detected a condition where the maximum synchronization error was exceeded.

**861 (M) ATC ARM CABLE SHORT CIRCUIT** - An external short circuit was detected when the ATC arm motor was commanded on. This indicates a short in the cable leading to the motor or a short internal to the motor itself.

**862 (L) SPINDLE SYNCH MAX LOAD TIME EXCEEDED** - During G199, spindle synchronization, a spindle was at maximum load for longer than 1 second. Adjust feeds, speeds and/or spindle velocity.

**862 (M) ATC CAROUSEL CABLE SHORT CIRCUIT** - An external short circuit was detected when the ATC carousel motor was commanded on. This indicates a short in the cable leading to the motor or a short internal to the motor itself.

**863 (M) ATC SHUTTLE CABLE SHORT CIRCUIT** - An external short circuit was detected when the ATC shuttle motor was commanded on. This indicates a short in the cable leading to the motor or a short internal to the motor itself.

**864 (M) TOOL CHANGER INTERNAL ERROR** - An unexpected error has occurred in the tool changer software. Consult the factory if you get this alarm.

**865 (M) ATC TURRET MOTOR HIGH LOAD** - The ATC turret motor has a higher than normal load. Check for objects preventing the arm from completing its motion and check for any mechanical drag or binding; then run tool changer recovery. This can also be caused by a jammed motor gearbox.

**866 (M) ATC TURRET MOTOR ELECTRICAL FAULT** - No motor current was measured after the ATC turret motor was commanded ON. This is caused by a break in the motor current loop indicating a failed motor, motor cable or I/O board drive circuitry.

**867 (M) TURRET CABLE SHORT CIRCUIT** - An external short circuit was detected when the ATC turret motor was commanded on. This indicates a short in the cable leading to the motor or a short internal to the motor itself.

**868 (M) ATC TURRET DRIVE TRAIN FAILURE** - The turret was commanded to move and either it did not leave the current pocket as expected or it did not reach the next pocket as expected. Parameter 60 and 61 controls the timeout for these two conditions respectively. Electrical current was detected to the motor so this may be caused by a failure in the drive train system, i.e. motor, gearbox, chain, belt, etc.

**869 TOOL CHANGER REGEN OVERLOAD** - The tool changer regen has been overloaded. This is likely caused by an unbalanced tool load on the carousel. Spread heavy tools evenly throughout the carousel and try again.

**870 (M) ATC ARM MOTOR OVERLOAD** - The ATC arm motor has had a high average load over many seconds. This could be caused by a tool changer that is mechanically dragging, running tool changes with less then 2 seconds between changes or by improperly installed tool changer jumpers on the I/O board. It can also be caused by a bad motor.

**871 (M) ATC CAROUSEL MOTOR OVERLOAD** - The ATC carousel motor has had a high average load over many seconds. This could be caused by too many heavy tools on one side of the carousel.

**872 (M) ATC SHUTTLE MOTOR OVERLOAD** - The ATC shuttle motor has had a high average load over many seconds. This can be caused by a tool changer that is mechanically binding.

**873 (M) ATC TURRET MOTOR OVERLOAD** - The ATC turret motor has had a high average load over many seconds. This can be caused by a tool changer that is mechanically binding.

**874 (M) DC MOTOR REGEN OVERLOAD** - The regen for a DC motor has overloaded. This can be caused by a failure of the I/O board circuitry.

**875 DC MOTOR HIGH LOAD** - An unidentified DC motor has had a high load (at or near stall) for less than one second.. Possible DC motor locations are the tool changer, APC, APL arm or auto-door. Check each of these motors (if installed) for a stalled or binding motor or drive train component.

**876 DC MOTOR OVERLOAD** - An unidentified DC motor has had a high average load over many seconds.. Possible DC motor locations are the tool changer, APC, APL arm or auto-door. Check each of these motors (if installed) for a binding motor or drive train component.

**877 DC MOTOR ELCTRICAL FAULT** - An unidentified DC motor electrical fault was detected. No motor current was measured after the motor was commanded on. Possible DC motor locations are the tool changer, APC, APL arm or auto-door. Check each of these motors (if installed) for a broken cable or unplugged connection.

**878 DC MOTOR CABLE SHORT** - An unidentified DC motor external short circuit was detected. Possible DC motor locations are the tool changer, APC, APL arm or auto-door. Check each of these motors (if installed) for a shorted motor cable.

**879 MULTIPLE DC MOTORS** - Multiple DC motors were commanded on at the same time. If you were running a program, this may be the result of a problem in your G-code program. This could also be caused by a damaged I/O board.

**880 UNDER VOLTAGE ON 160V BUS** - The 160V DC bus was below 100 volts at the time a motor was commanded on. The most likely cause is low line voltage.

**890 BOTH CHUCKS ARE CLAMPED** - An operation was attempted while both chucks were clamped. Unclamping one chuck, when safe, will allow the operation to be performed.

**891 SPINDLE SYNCH ERROR HAS EXCEEDED LIMIT** - During G199, spindle synchronization, the control detected a condition where the maximum synchronization error was exceeded.

**892 SPINDLE SYNCH MAX LOAD TIME EXCEEDED** - During G199, spindle synchronization, a spindle was at maximum load for longer than 1 second. Adjust feeds, speeds and/or spindle velocity.

**900 A PARAMETER HAS BEEN CHANGED** - The operator has altered the value of a parameter. When the alarm history is displayed, the operator will be able to see the parameter number and the old value along with the date and time the change was made. This is not a resettable alarm.

**901 PARAMETERS HAVE BEEN LOADED BY DISK** - When a parameter file has been loaded from disk, Alarm 901 is added to the alarm history along with the date and time. Note that this is not a resetable alarm; it is for informational purposes only.

**902 PARAMETERS HAVE BEEN LOADED BY RS232** - When a parameter file has been loaded from RS-232, Alarm 902 is added to the alarm history along with the date and time. Note that this is not a resetable alarm; it is for informational purposes only.

**903 CNC MACHINE POWERED UP** - When the machine is powered up, Alarm 903 is added to the alarm history along with the date and time. Note that this is not a resetable alarm; it is for informational purposes only.

**904 (M) ATC AXIS VISIBLE** - The tool changer axis must be invisible for tool change operations with the HS tool changers. Set Parameter 462, bit 18, Invis Axis to 1. This will make the tool changer axis invisible and tool changes will be allowed.

**905 (M) NO P CODE IN M14, M15, M36** - In M14, M15, M36 must specify pallet number with P code.

**906 (M) INVALID P CODE IN M14, M15, M36 OR M50** - The P code must be the number of a valid pallet without a decimal point, and must be a valid integer number.

**907 (M) APC UNLOAD-SWITCH MISSED PAL 3** - Pallet #3 did not return from the receiver to the APC in the allowable amount of time. This can be caused by the chain switch block missing the limit switch, or from another mechanical problem, such as clutch slippage.

**908 (M) APC UNLOAD-SWITCH MISSED PAL 4** - Pallet #4 did not return from the receiver to the APC in the allowable amount of time. This can be caused by the chain switch block missing the limit switch, or from another mechanical problem, such as clutch slippage.

**909 (M) APC-PROGRAM NOT LISTED** - No program name in the Pallet Schedule Table for the loaded pallet. To run a program for the loaded pallet, enter the program name into the Program Name column of the Pallet Schedule Table for the required pallet, or remove M48 from the subprogram you want to use. Verify that the program and the pallet are compatible.

**910 (M) APC-PROGRAM CONFLICT** - The subprogram you are trying to run is not assigned to the loaded pallet. Another program is assigned to this pallet in the Pallet Schedule Table. Either enter the required program name into the Program Name column of the Pallet Status Table, or remove M48 from the subprogram you want to use. Verify that the subprogram and the pallet are compatible.

**911 (M) APC-PAL LOAD/UNLOAD AT ZERO** - One or more of the pallets on the APC has a load or unload position set to zero. This means that the APC set up procedure was incomplete. Establish correct load and unload positions for all pallets and enter the positions in the appropriate settings. See operator's manual for the APC model correct setting numbers.

**912 (M) APC-NO P CODE OR Q CODE FOR M46** - M46 must have a P code and a Q code. The P code must be a line number in the current program. The Q code is the pallet number, if loaded, that causes a jump to the program line number.

**913 (M) APC-NO P CODE OR Q CODE FOR M49** - M49 must have a Q code. The P code is the pallet number. The Q code is the status to give the pallet.

**914 (M) APC-INVALID P CODE** - The P code must be the name of a program stored in memory. The program name must not have a decimal point. Remove any decimal points from the program name.

**915 (M) APC-ILLEGAL NESTING G188 or M48** - G188 is only legal in main program. M48 is only legal in a program listed in the Pallet Schedule Table or a first level subprogram.

**916 (M) APC-NEGATIVE PAL PRIORITY INDEX** - Software Error; call your dealer.

**917 (M) APC-NUMBER OF PALLETS IS ZERO** - Parameter 606 must have a value if Parameter 605 is not zero. Set Parameter 606 to the number of pallets in your FMS system.

**918 (M) APC LOAD-SWITCH MISSED PAL 1** - Pallet #1 did not complete its move from the APC to the receiver in the allowable time. Pallet change sequence was halted because receiver switch was not activated. Pallet is either unclamped or not on the receiver. Ensure the pallet is correctly located on receiver (against hard stop), then run M18 to clamp the pallet. After correcting the condition, run M50 to continue machining.

**919 (M) APC LOAD-SWITCH MISSED PAL 2** - Pallet #2 did not complete its move from the APC to the receiver in the allowable time. Pallet change sequence was halted because receiver switch was not activated. Pallet is either unclamped or not on the receiver. Ensure the pallet is correctly located on receiver (against hard stop), then run M18 to clamp the pallet. After correcting the condition, run M50 to continue machining.

**920 (M) APC LOAD-SWITCH MISSED PAL 3** - Pallet #3 did not complete its move from the APC to the receiver in the allowable time. Pallet change sequence was halted because receiver switch was not activated. Pallet is either unclamped or not on the receiver. Ensure the pallet is correctly located on receiver (against hard stop), then run M18 to clamp the pallet. After correcting the condition, run M50 to continue machining.

**921 (M) APC LOAD-SWITCH MISSED PAL 4** - Pallet #4 did not complete its move from the APC to the receiver in the allowable time. Pallet change sequence was halted because receiver switch was not activated. Pallet is either unclamped or not on the receiver. Ensure the pallet is correctly located on receiver (against hard stop), then run M18 to clamp the pallet. After correcting the condition, run M50 to continue machining.

**922 (M) APC-TABLE NOT DECLARED** - Software calling invalid tables. Software Error; call your dealer.

**923 (L) LOW OIL PRESSURE** - Oil Pump for platter gear has no pressure. Check that pump is pumping oil through lines. Check to make sure filter next to pump is not plugged. Parameter 618 determines delay to check pressure after start.

**923 (M) A INDEXER IS NOT AT THE PROPER INCREMENTAL POSITION** - The indexer has moved to a position that cannot be seated.

**924 (L) SS LOW LUBE OR LOW PRESSURE** - Way lube is low or empty or there is no lube pressure or too high a pressure. Check tank at rear of machine and below control cabinet. Also check connector on the side of the control cabinet. Check that the lube lines are not blocked. Parameter 616 determines cycle time.

**924 (M) B INDEXER IS NOT AT THE PROPER INCREMENTAL POSITION** - The indexer has moved to a position that cannot be seated.

**925 (M) A INDEXER IS NOT FULLY IN THE UP POSITION** - The indexer is still seated. It is not completely in the up position and cannot be rotated. Reset, then rezero the indexer. The platter lift switch may need adjustment (See mechanical maintenance manual for details).

**926 (M) B INDEXER IS NOT FULLY IN THE UP POSITION** - The indexer is still seated. It is not completely in the up position and cannot be rotated. Reset, then rezero the indexer.

**927 (M) ILLEGAL G1 CODE FOR ROTARY INDEXER** - The rotary indexer only does rapid G0 motion. Feed G1 motion is not allowed.

**928 (M) Tool Shuttle Not At Home** - The tool shuttle mechanism is not at the home position; this is required before a tool change can be initiated. Press the RECOVER key for more details and to restore the tool changer to operational state.

**929 (M) Tool Shuttle Move Command Error** - During a tool change operation an invalid condition occurred in the software related to the tool shuttle. If this alarm persists, you may need to contact your dealer.

**930 TOOL SHUTTLE TOOL ERROR**

**931 (M) Tool Shuttle Move Error** - Tool stuck in spindle or tool changer pocket. Or tool transfer to or from the staging pocket did not occur within the time specified by parameter 615. Check for any obstructions of the shuttle transfer mechanism. Check the home switch and wiring, the transfer drive mechanism and belt. After resolving any problems, press the RECOVER key to bring the shuttle back to the home switch position.

**932 (M) SERVO TOOL CAROUSEL AXIS IS DISABLED** - The servo tool changer carousel axis, specified by Parameter 804 TC CAROUSEL AXIS, is disabled.

**933 (L) BAR 100- MAXIMUM PARTS COMPLETED** - Job Completed. To Continue, reset #3103 Max # Parts and/or #3106 Current # Parts Run on the Bar 100 Commands page. **934 (L) BAR 100- CURRENT BAR FINISHED** - Load new bar. Reset alarm and press Cycle Start to continue.

**935 (L) BAR 100 FAULT** - Bar 100 program error. Cycle power on the machine. If the alarm reoccurs, call your dealer and report the sequence of events that led to the alarm.

**936 IPS CRC ERROR** - IPS variables lost by low battery. Check for a low battery and low battery alarm.

**937 INPUT LINE POWER FAULT** - Input line power failed. This alarm will be generated whenever incoming power to machine falls below reference voltage value in Parameter 730 and duration of time in Parameter

731. Cycle the power to continue.

**938 LANGUAGES LOADED** - Foreign languages were recently loaded into the control.

**939 LANGUAGES FAILED TO LOAD** - Foreign languages failed to be loaded into the control. Languages either exceeded total flash memory, or not enough flash memory available. Try deleting a language from disk.

**940 (M) SIDE MOUNT CAROUSEL ERROR** - This alarm is generated by the tool changer if the carousel motor is still running when the tool pocket is unlocked and lowered prior to a tool change, if the carousel does not start to rotate after the allowed time specified by Parameter 60, Turret Start Delay, or does not stop rotating after the allowed time specified by Parameter 61, Turret Stop Delay.

**941 (M) POCKET-TOOL TABLE ERROR** - A requested tool was not found in the pocket tool table. Check your pocket tool table and program for error.

**942 (M) CAROUSEL POSITION TIMEOUT** - This alarm is generated by the tool changer if the tool carousel has not moved after the allowed time or has not stopped after the allowed time specified by Parameter 60, Turret Start Delay and Parameter 61, Turret Stop Delay, respectively.

**943 (M) UNPROCESSED QUEUE CELL IN TOOL CHANGE** - There is an unknown command generated in the Tool change. Please save your current program to disk and notify your dealer.

**944 (M) INDEXER OUT OF POSITION** - The A-axis indexer is out of position. Jog A-axis to within 1° of a clamping position before running a program.

**945 (M) APC-LIFT FRAME DOWN TIMEOUT** - The pallet changer was commanded to lower but the down position switch was not contacted before the timeout period. Check for foreign objects under the lift frame. Verify there is an adequate supply of air pressure and air volume. Verify that Parameter 320 is correct. Check air solenoids for sticking and air release ports for clogging. Check pallet down position switch and wiring for damage, switch connections for positive electrical contact, and the lifting mechanism for proper operation. After determining the cause and correcting the problem, press Recover to enter pallet changer recovery, recover the pallet changer, and then continue operation. The H Frame down switch is accessed through an opening on the side of the W-Axis Torque Tube on EC-400s and EC-500s. Some sheetmetal will need to be removed to access this switch.

**946 (M) APC-PALLET CLAMP TIMEOUT** - The pallet in the mill did not clamp in the time allowed. Check for foreign objects under the pallet and between the pallet and the clamp plate. Verify there is an adequate supply of air pressure and air volume. Check air solenoids for sticking and air release ports for clogging. Check the pallet clamped position switch for correct operation, the switch and wiring for damage, and pallet alignment. Check the pallet clamp mechanism for correct operation. After determining the cause and correcting the problem, press Recover to enter pallet changer recovery, recover the pallet changer, and then continue operation. Parameter 317 specifies the pallet clamp timeout period.

**947 (M) APC-PALLET UNCLAMP TIMEOUT** - The pallet in the mill did not unclamp in the time allowed. Check for foreign objects between the pallet and the clamp plate. Verify there is an adequate supply of air pressure and air volume. Check air solenoids for sticking and air release ports for clogging. Check the pallet clamped position switch for correct operation, the switch and wiring for damage and pallet alignment. Check the pallet clamp plate for damage or foreign objects. After determining the cause and correcting the problem, press Recover to enter pallet changer recovery, recover the pallet changer, and continue operation. Parameter 316 specifies the unclamp timeout period.

**948 (M) APC-SOFTWARE ERROR** - Fault in pallet changer software. Note the actions that caused this alarm. Also record the following information: On the control panel, press Param Dgnos key to get the Dgnos screen. Press Page Up to the PC Inputs page. Record the values of PC State, Alarm ST, and Alarm. If this alarm recurs regularly, call your dealer.

**949 (M) APC-AXIS VISIBLE** - The pallet changer axis must be invisible for the pallet changer to operate. Set the parameter bit Invis Axis to one for the axis that the pallet changer is installed on.

**950 (M) APC-ILLEGAL SWITCH CONDITION, LIFT FRAME** - The pallet changer lift frame switches indicate that the pallet changer lift frame is up and down at the same time. Verify an adequate supply of air pressure and air volume. Check the adjustment of the lift frame position switches and for debris on the switches. Check switch electrical connections and wiring. This may be a false alarm if the pallet changer was out of position by 90° (+/- 20) when a pallet change was in progress. After correcting the cause, press Recover to enter pallet changer recovery, recover the pallet changer, and then continue operation.

**951 (M) APC-ILLEGAL SWITCH CONDITION, PALLET CLAMP** - The pallet changer clamp switches indicate that the pallet changer is clamped and unclamped at the same time. Check the adjustment of the pallet clamp switches and for debris on the switches. Check switch electrical connections and wiring. After correcting the cause, press Recover to enter pallet changer recovery, recover the pallet changer, and then continue operation.

**952 (M) APC-MISLOCATED LIFT FRAME** - Pallet changer lift frame is not in expected position. The lift frame was either down when expected to be up, or up when expected to be down. For example, the lift frame must be up while rotating, and down when a pallet change starts, before clamping the pallet, before the A-axis or Z-axis can be jogged, or before starting a program with Cycle Start. If pallet began to lower during rotation, check lift mechanism for proper operation. If this alarm occurred at start of pallet change or when clamping the pallet, check for foreign objects or misalignment, preventing frame from lowering all the way. Verify there is an adequate supply of air pressure and air volume. After correcting the cause, press Recover to enter pallet changer recovery, recover the pallet changer, and then continue operation.

**953 (M) APC-MISLOCATED PALLET CLAMP** - Pallet changer clamp plate is not in the expected position. The clamp plate must be unclamped while the pallet changer is rotating or before the pallet is lifted. Verify there is an adequate supply of air pressure and air volume. Check operation of the clamp mechanism air solenoids. Check the pallet clamped position switch for correct operation, the switch and wiring for damage and pallet alignment. Check the pallet clamp plate for damage. After correcting the cause, press Recover to enter pallet changer recovery, recover the pallet changer, and then continue operation.

**954 (M) APC-INCOMPLETE PALLET CHANGE** - The last pallet change did not complete successfully or the mill has been initialized. Press Recover to enter pallet changer recovery, recover the pallet changer, and then continue operation.

**955 (M) APC-INVALID PALLET CHANGER TYPE** - Parameter 605 has an invalid pallet changer type.

| Model | Basic Value |
|---|---|
| VF APC | 2 |
| MDC 500/EC-300 | 3 |
| EC400/EC400PP/EC500 | 4 |
| EC630 | 5 |

**956 (M) APC-LIFT FRAME UP TIMEOUT** - The pallet changer was commanded to lift but the up position switch was not contacted before the timeout period. The primary cause of this alarm is insufficient air pressure or air volume. Also, verify the pallet is unclamped and there are no obstructing objects. Check pallet up switch and wiring for damage, switch connections for positive electrical contact, and the lifting mechanism for proper operation. Verify Parameter 321 is correct. After determining and correcting the problem, press Recover to enter pallet changer recovery, recover the pallet changer, and then continue operation.

**957 (M) APC-SWITCH FAULT** - Illegal switch condition detected. The pallet clamp switch did not function correctly. Use M17 and M18 commands to verify the input switch (input relay 26) changes state when the pallet clamps and unclamps. Check switch adjustment and check wiring for damage or unplugged connectors. The polarity of the clamp switch may be wrong. Parameter 734 is used to invert input switch polarity.

**958 TOOL OFS WEAR HAS BEEN CHANGED** - Whenever the tool wear offsets are changed, alarm 958 will be added to the alarm history along with the date and time the change was made. This is not an alarm; it is for information purposes only.

**959 (M) NON-INDEXER POSITION** - The position commanded for the A-axis incremental indexer is a non-

indexer position. The indexer positions are multiples of Parameter 647. Parameter 647 is in thousandths of a degree. For example, a value of 2500 represents 2.5°.

**960 (M) INDEXER SWITCH NOT FOUND IN TIME** - The A-axis indexer down switch was not found within the allowed time specified by Parameter 659.

**961 FLOPPY OFFSET NOT FOUND** - This alarm is generated because FNC has lost the offset placemark it needs to correctly advance the program. Try to reload the program.

**962 UNABLE TO RETRIEVE FILE INFORMATION** - File functions taking to long to process. Try reloading.

**963 UNABLE TO FNC FROM THIS DEVICE** - This device may not function from FNC. Change setting 134 the connection-type to an appropriate FNC device and try again. Check the operators manual for devices that are capable of FNC.

**964 TOOL TURRET ROTATE FAULT** - The turret did not rotate to the correct location within the time specified in Parameter 60. Check for obstructions that would prevent the turret from rotating. Check the operation of the position sensors: slow, position_1, and in_position.

**965 TURRET CLAMP/UNCLAMP FAULT** - The turret did not clamp within the time specified in Parameter 62, or unclamp in the time specified in Parameter 63. Check the air supply. Check for obstructions preventing the turret from clamping. Check the operation of the position sensors: slow, position_1, and in_position.

**966 (L) EXCESSIVE PART IMBALANCE** - Excessive vibration was detected. This was most likely due to an imbalanced part. Check that the part is balanced and centered in the spindle. Check that any bar-stock that is extending beyond the back of the lathe is properly supported and balanced. Improperly supported or imbalanced bar-stock can be a lethal hazard when rotated.

**966 (M) EXCESSIVE TOOL IMBALANCE** - The control detected potentially dangerous vibration in the tool. Inspect the tool and tool holder for damage or imbalance. Do not use damaged or imbalanced tools.

**967 SKBIF COMMUNICATION FAULT** - Serial communication between the main processor and the serial keyboard interface (SKBIF) was interrupted. Any machine motion in progress at the occurrence of the interruption has been stopped. This fault can be caused by a break in the power or serial data cables. It can also occur when the SKBIF is reset for an unknown reason. Verify that the power and serial data cables are seated properly in their mating connectors. Replace as necessary. Restart the control by cycling power on the machine. If this alarm persists replace the SKBIF. The main processor is located in the control cabinet. The SKBIF is located in the front panel.

**968 DOOR HOLD OVERRIDE ENGAGED** - Whenever Setting 51 is changed to On, Alarm 968 is added to alarm history along with the date and time of the change. Note that this is not a resettable alarm; it is for information purposes only.

**969 (M) NO ROTARY INDEXERS WITH LINEAR RAPIDS** - The linear rapids feature is incompatible with rotary indexers. Either disable the rotary indexer or set parameter 315 bit 23 rapid->feed parameter to 0.

**970 NO AXIS COMMANDED IN FEED CODE** - There was an unknown command generated. If help is needed, please save your current program to disk and notify your dealer.

**971 FAILED LOAD** - The on board device computer failed to load network drivers. This is from an invalid network setting. Cycle power. CNC should go into Drivers not Loaded mode, change network settings and try again. If you continuously get Failed to Load alarms without Drivers not Loaded mode, notify your dealer. The default network settings can be restored if needed. Press Prgrm Convers during power up, then Press P Enter, then P5 Enter.

**972 FNC FILE NOT FOUND** - FNC was unable to find the selected program or subprogram specified by M98. Reselect the program from the program list on device. Make sure the FNC file is named using the format Onnnnn.nc; the upper case letter, O, followed by up to 5 numbers with .nc as the extension. Leading zeros must be included in the file name ie: O00012.nc.

**973 FIXTURE CLAMP FAILURE** - The users fixture became unclamped while the spindle was turning.

**974 (M) PALLET POOL-SWITCH FAULT** - An illegal switch condition was detected for the pallet pool lifter. Check the lift arm switches for damage or accumulated chips. Check the wires for damage and that the wires are connected correctly.

**975 (M) PALLET POOL-LIFT ARM FAULT** - The pallet lift arm in the pallet pool did not lift or lower completely. Check the lift arm for binding. Verify that the lift arm switches work correctly. Check that the air supply line size is large enough. Verify there is an adequate supply of air pressure and volume. The time outs for the lift arm are specified by parameters 320 (down timeout) and 321 (up timeout).

**976 (M) PALLET POOL-INVALID PALLET** - Requested pallet is not in pallet pool system. To correct problem: Change the p-code with the M50 command, select a pallet from the PST that is already inside the machine, go to the 'Shelf' column of the PST screen and enter the shelf letter that a pallet is sitting on.

**977 (M) PALLET POOL-PALLET TABLE FAULT** - There is a pallet pool fault. A pallet has been detected in the target shelf. If there is no pallet in the target shelf, go to the PST and clear the shelf letter for that pallet. Press RESET to clear all alarms, then press F1 to remove the pallet from the pallet pool lifter.

**978 (M) PALLET POOL-INVALID OFFSETS** - One or more of pallet pool shelf position offsets has a value of zero, or other invalid value. This means the pallet pool setup is incomplete.

**979 (M) PALLET POOL-AXIS VISIBLE** - All pallet pool servo axes must be invisible for normal operation. Set the INVIS AXIS parameter bit to 1 for all pallet pool servo axes.

**980 (M) PALLET POOL-PALLET CHANGER OUT OF POSITION** - The pallet pool loader attempted to load a pallet, but the pallet changer was out of position. Recover the pallet changer before loading pallets from the pool.

**981 (M) PALLET POOL-LIFTER ARM IN DANGER ZONE** - The pallet pool lifter arm was too close to the pallet changer when the H-frame was ready to rotate. Adjust setting 154 to extend the safe zone.

**982 ZERO ANGLE MOVE** - This is caused by start and end point not coinciding and aligned with IJK. Set end point to the value of start point for a full circle move, or change end point to increase the angle.

**983 (M) VD OVER CURRENT** - Vector Drive over current. The Vector Drive has detected excessive current going to the motor. This can be caused by a stalled spindle, a high spindle load for a short duration, a spindle speed that is too low during a cut, a miswired spindle motor or a faulty Vector Drive. Check the spindle, spindle speed and surface speed.

**985 DC BUS OV CHRG** - DC Bus over voltage during charge up. The DC bus monitor detected an improper charge-up. The DC bus voltage was too high during the 2-second charge up sequence. This can be caused by the incoming AC voltage being too high or an improperly tapped main transformer. Check the incoming line voltage and verify the main transformer taps are setup properly. Cycle power to continue.

**986 CALIBRATION FAILED** - The amplifier failed to self-calibrate within 30 sec. This can be caused by a faulty amplifier or a faulty Mocon.

**987 SCREEN SAVE AREA FAULT** - Too many save areas required.

**988 SCREEN RESTORE AREA FAULT** - Too many restores for screen save areas required.

**989 IMPROPER USE OF STRCHR** - This routine was called with a UNICODE string as the source.

**990 IMPROPER USE OF WSTRCHR** - This routine was called with a ASCII string as the source.

**991 AMPLIFIER OVER TEMPERATURE** - The amplifier/vector drive temperature sensor indicates over 90°C near the power transistors. This can be caused by an extended overload condition of the amplifier/vector drive, a stopped fan or high room temperature. Verify that the amplifier/vector drive fans are working.

**992 AMPLIFIER OVER CURRENT** - The amplifier has detected excessive current going to the motor. This can be caused by a stalled motor, a high motor load for a short duration, a spindle speed that is too low during a cut, a motor improperly wired or a faulty amplifier. Check the motor, and the programmed spindle speed and surface speed. Make sure the axis did not hit a hard stop. This can also be caused by a faulty amplifier.

**993 AMPLIFIER SHORT CIRCUIT** - This can be caused by any of the motor leads shorted to each other or shorted to the 320V return. This can also be caused by a faulty amplifier. Check all of the motor leads and make sure they are properly connected. This can also be caused by a faulty amplifier

**994 AMPLIFIER OVERLOAD** - The amplifier has detected a high load for an extended period of time. This can be caused by running the amplifier at more than 100% load for an excessive amount of time. Check the programmed feeds and spindle speed, and for dull tools. This can also be caused by a faulty amplifier.

**995 ERROR TOO LARGE** - Amplifier error too large. Difference between actual current and commanded current in amplifier is too great. This can be caused if the MOCON commands are more current than the amplifier's capabilities. Make sure the MOCON is working. This can also be caused by a faulty amplifier.

**996 (L) TAIL STOCK MUST BE ZERO RETURNED** - The hydraulic tail stock has been adjusted to a new position. The B-axis must be zero returned before the tailstock is used. Ensure that the correct lock bolt is tightened before pressing the zero return key. Adjust settings 93 and 94 for the new tailstock position.

**997 TOO MANY FILES HAVE BEEN OPENED ON THE CURRENT DEVICE** - Device from which a program is running has reached maximum number of files which can be opened on it. Reduce the number of subroutines used.

**998 A FILE COULD NOT BE OPENED** - A file on the current device could not be opened. Check the program number or name (check case).

**999 SERVOS POWERED DOWN** - The servos have been powered down to save energy. The machine was idle for longer than the number of minutes specified in Setting 216. Press RESET to re-activate the servos.

Alarms 1000-1999 are user-defined by macro programs.

**2010 EDITED SYSTEM FILE LOADED** - A system file was loaded that is different from the file that was saved by the control. This indicates that the file is either edited or corrupted. If the file was not edited, there may be an error in the data that was loaded.

## PARAMETERS

Parameters are seldom-modified values that change the operation of the machine. These include servo motor types, gear ratios, speeds, stored stroke limits, ballscrew compensations, motor control delays, and macro call selections. These are all rarely changed by the user and should be protected from being changed by the parameter lock setting. If you need to change parameters, contact Haas or your dealer. Parameters are protected from being changed by Setting 7.

The Settings page lists some parameters that the user may need to change during normal operation. These are simply called “Settings”. Under normal conditions, the parameter displays should not be modified. A complete list of the parameters is provided here. Where parameter numbers have different meanings between lathes and mills, it will be indicated with a **(L)** or an **(M)** directly after the parameter number or wording to which the text pertains. The **(L)** and **(M)** will not appear in the parameter numbers on the machine display.

The Page Up, Page Down, up and down cursor keys, and the jog handle can be used to scroll through the control parameter display screens. The left and right cursor keys scroll through bits in a single parameter.

### Parameter List

### 1 X SWITCH A

Parameter 1 is a collection of single-bit flags used to turn servo related functions on and off. The left and right cursor arrows are used to select the function being changed. All values are 0 or 1 only. The function names are:

**0** **REV ENCODER -** Reverses the direction of encoder data.

**1** **REV POWER -** Reverses the direction of power to motor.

**2** **REV PHASING -** Reverses motor phasing.

**3** **DISABLED -** Disables the X-axis.

**4** **Z CH ONLY -** With **A** only, indicates no home switch.

**5** **AIR BRAKE -** With **A** only, indicates air brake is used.

**6** **DISABLE Z T -** Disables encoder **Z** test (for testing only).

**7** **SERVO HIST -** Graph of servo error (for diagnostics only).

**8** **INV HOME SW -** Inverted home switch (NC switch).

**9** **INV Z CH -** Inverted **Z** channel (normally high).

**10** **CIRC. WRAP. (L) -** When Parameter 498 bit 10, is set to 1, the lathe automatically unwinds the C-axis no more than half a rotation. When the bit is set to zero, it behaves as if the C-axis had been rotated many times and disengaged. When it is engaged again, the control zeroes it by unwinding as many times as it was wound.

**10** **CIRC. WRAP. (M) -** With **A** only, causes 360 wrap to return to 0.

**11** **NO I IN BRAK -** With **A** only, removes **I** feedback when brake is active.

**12** **LOW PASS +1X -** Adds 1 term to low pass filter.

**13** **LOW PASS +2X -** Adds two terms to low pass filter.

**14** **OVER TEMP NC -** Selects a normally closed overheat sensor in motor.

**15** **CABLE TEST -** Enables test of encoder signals and cabling.

**16** **Z TEST HIST -** History plot of Z channel test data.

**17** **SCALE FACT/X -** If set to 1, the scale ratio is interpreted as divided by X; where X depends on bits **SCALE/X LO** and **SCALE/X HI.**

**18** **INVIS AXIS -** Creates an invisible axis.

**19** **(L) DIAMETER PRG -** Sets diameter programming. When set to 1, it interprets inputs as diameter instead of radii.

**19** **(M) ALM ON LM SW -** Rotary alarms at the limit switch.

**20** **(L) TRAVL LIMITS -** Travel limits are used.

**20** **(M) CK TRAVL LIM A -** Rotary travel limits are used. On mills with the Gimbaled Spindle (used on the VR series mills), A and B axes **CK TRAVL LIM** must be set to 1.

**21** **(L) NO LIMSW ALM -** Alarms are not generated at the limit switches.

**21** **(M) ROT TRVL LIM -** Rotary travel limits are used.

**22** **D FILTER X8 -** Enables 8 tap FIR filter on the derivative component of the servo loop. Used to eliminate high frequency vibrations (depending on axis motor).

23 **D FILTER X4 -** Enables 4-tap FIR filter on the derivative component of the servo loop. Used to eliminate high frequency vibrations (depending on axis motor).

24 **TORQUE ONLY -** For Haas diagnostic use only.

25 **3 EREV/MREV -** The **2 EREV/MREV** and **3 EREV/MREV** bits have two definitions, depending on whether one or two encoders are present. For single encoder systems, the bits are used to define the ratio between the electrical rotation of the spindle motor and the mechanical rotation of the motor. For two encoder systems, the definition is the electrical rotation of the motor to the mechanical rotation of the spindle motor encoder, which includes any pulley ratio between the motor and the motor encoder.

26 **2 EREV/MREV -** The **2 EREV/MREV** and **3 EREV/MREV** bits have two definitions, depending on whether one or two encoders are present. For single encoder systems, the bits are used to define the ratio between the electrical rotation of the spindle motor and the mechanical rotation of the motor. For two encoder systems, the definition is the electrical rotation of the motor to the mechanical rotation of the spindle motor encoder, which includes any pulley ratio between the motor and the motor encoder.

27 **NON MUX PHAS -** For Haas diagnostic use only.

28 **BRUSH MOTOR -** Enables the brushless motor option.

29 **(L) ROTARY AXIS -** When set to 1, the axis is treated as a rotary axis. Position will be displayed in degrees, and inputs will be interpreted as angles.

29 **(M) LINEAR DISPL -** Changes the display from degrees to inches (or millimeters) on the A and B axes.

30 **SCALE/X LO -** With **SCALE/X HI** bit, determines the scale factor used in bit **SCALE FACT/X**.

31 **SCALE/X HI -** With **SCALE/X LO** bit, determines the scale factor used in bit **SCALE FACT/X**. See below:

| HI | LO | |
|---|---|---|
| 0 | 0 | 3 |
| 0 | 1 | 5 |
| 1 | 0 | 7 |
| 1 | 1 | 9 |

## 2 X P GAIN

Proportional gain in servo loop.

## 3 X D GAIN

Derivative gain in servo loop.

## 4 X I GAIN

Integral gain in servo loop.

## 5 X RATIO (Steps/Unit)

Number of steps of encoder per unit of travel. Encoder steps supply four (4) times their line count per revolution. Thus, an 8192 line encoder and 6mm pitch screw give: **8192 x 4 x 25.4 / 6 = 138718** (5 steps per unit inch/mm ratio).

## 6 X MAX TRAVEL (Steps)

Maximum negative direction of travel from machine zero in encoder steps. Does not apply to A-axis. A 20-inch travel, 8192 line encoder and 6 mm pitch screw give: **20.0 x 138718 = 2774360**.

## 7 X ACCELERATION

Maximum acceleration of axis in steps per second per second.

## 8 X MAX SPEED

Maximum speed for this axis in steps per second.

## 9 X MAX ERROR

Maximum error allowed in servo loop before alarm is generated. Units are encoder steps. This is the maximum allowable error in Hz between commanded speed and actual speed. The purpose of this parameter is to prevent “motor runaway” in case of phasing reversal or bad parameters. If this parameter is set to 0, it defaults to 1/4 of Parameter 183, Max Frequency.

## 10 X FUSE LEVEL

Limits average power to motor. If not set correctly, this parameter can cause an “overload” alarm.

**11 (L) X BACK EMF**
Back EMF of motor in volts per 1000 rpm times 10. Thus a 63 volt/Krpm motor gives 630.

**11 (M) X TORQUE PRELOAD**
**Torque Preload** is a signed number that should be set to a value from 0 to 4095, where 4095 is the maximum motor torque. It is applied at all times to the servo in the same direction. It is used to compensate, in the vertical direction, for gravity on a machine with an axis brake instead of a counterbalance. Normally, the brake is released when the servo motors are activated. When the vertical axis is commanded to move, the brake is released and the servo motors are activated. This parameter specifies the bias torque compensation for gravity.

**12 X STEPS/REVOLUTION**
Encoder steps per revolution of motor. An 8192 line encoder gives: **8192 x 4 = 32768**

**13 X BACKLASH**
Backlash correction in encoder steps.

**14 X DEAD ZONE**
Dead zone correction for driver electronics. Units are 0.0000001 seconds.

**15 Y SWITCH A**
See Parameter 1 for description.

**16 Y P GAIN**
See Parameter 2 for description.

**17 Y D GAIN**
See Parameter 3 for description.

**18 Y I GAIN**
See Parameter 4 for description.

**19 Y RATIO (Steps/Unit)**
See Parameter 5 for description.

**20 Y MAX TRAVEL (Steps)**
See Parameter 6 for description.

**21 Y ACCELERATION**
See Parameter 7 for description.

**22 Y MAX SPEED**
See Parameter 8 for description.

**23 Y MAX ERROR**
See Parameter 9 for description.

**24 Y FUSE LEVEL**
See Parameter 10 for description.

**25 (L) Y BACK EMF**
See Parameter 11 for description.

**25 (M) Y TORQUE PRELOAD**
See Parameter 11 for description.

**26 Y STEPS/REVOLUTION**
See Parameter 12 for description.

**27 Y BACKLASH**
See Parameter 13 for description.

**28 Y DEAD ZONE**
See Parameter 14 for description.

**29 Z SWITCH A**
See Parameter 1 for description.

**30 Z P GAIN**
See Parameter 2 for description.

**31 Z D GAIN**
See Parameter 3 for description.

**32 Z I GAIN**
See Parameter 4 for description.

**33 Z RATIO (Steps/Unit)**
See Parameter 5 for description.

**34 Z MAX TRAVEL (Steps)**
See Parameter 6 for description.

**35 Z ACCELERATION**
See Parameter 7 for description.

**36 Z MAX SPEED**
See Parameter 8 for description.

**37 Z MAX ERROR**
See Parameter 9 for description.

**38 Z FUSE LEVEL**
See Parameter 10 for description.

**39 (L) Z BACK EMF**
See Parameter 11 for description.

**39 (M) Z TORQUE PRELOAD**
See Parameter 11 for description.

**40 Z STEPS/REVOLUTION**
See Parameter 12 for description.

**41 Z BACKLASH**
See Parameter 13 for description.

**42 Z DEAD ZONE**
See Parameter 14 for description.

**43 A SWITCH A**
See Parameter 1 for bit descriptions.

**44 A P GAIN**
See Parameter 2 for description.

**45 A D GAIN**
See Parameter 3 for description.

**46 A I GAIN**
See Parameter 4 for description.

**47 (L) A RATIO (Steps/Unit)**
See Parameter 5 for description.

**47 (M) A RATIO (Steps/Unit)**
Defines number of encoder steps required or one full platter rotation. For example, an HRT 210 with a 90:1 gear

ratio, a final drive ratio of 2:1, and an encoder count of 2000 lines would be: **2000 x 4 x (90 x 2)/360 = 4000 steps**

For a brushless HRT 210 with a 90:1 gear ratio, a final drive ratio of 2:1 and an encoder count of 8192 the formula would be: **8192 x 4 x (90 x 2)/360 = 16384 steps**

If, for example, 16384 ended up being 13107.2 (non integer), the user must make sure the single bits **SCALE FACT/X** and the combination of **SCALE/X LO** and **SCALE/X HI** are turned on in Parameter 43. When the scale factor/x bit is 1, the scale ratio is interpreted as divide by X; where X depends on **SCALE/X LO and SCALE/X HI** (see Parameter 1 for **SCALE/X LO** and **SCALE/X HI** values). For example: **8192 x 4 x (72 x 2)/360 = 13107.2**

You would then turn on the **SCALE FACT/X** bit and the **SCALE/X LO** bit which would give you a factor of 5 thus: **13107.2 x 5 = 65536 encoder steps**

### 48 A MAX TRAVEL (Negative Travel Limit) (Steps)

See Parameter 6 for description. Normally this parameter would not apply to the A axis; however, this parameter is used on mills with a gimbaled spindle (5-axis mills). On a VR-series mill, this parameter is used to limit the amount of angular movement of the spindle (A and B axes). The A and B axes are limited in movement to a distance between negative **Max Travel**, and positive **Tool Change Offset**. On 5-axes mills A- and B-axis **Rot Trvl Lim** must be set to 1, **Max Travel** and **Tool Change Offset** must be calibrated and set correctly.

### 49 A ACCELERATION

See Parameter 7 for description.

### 50 A MAX SPEED

See Parameter 8 for description.

### 51 A MAX ERROR

See Parameter 9 for description.

### 52 A FUSE LEVEL

See Parameter 10 for description.

### 53 A BACK EMF

See Parameter 11 for description.

### 54 A STEPS/REVOLUTION

See Parameter 12 for description.

### 55 A BACKLASH

See Parameter 13 for description.

### 56 A DEAD ZONE

See Parameter 14 for description.

## Parameters 57 through 128 are used to control other machine dependent functions.

### 57 COMMON SWITCH 1

Parameter 57 is a collection of general purpose single bit flags used to turn some functions on and off. Left and right cursor arrows select the function being changed. All values are 0 or 1 only. The function names are:

0 **REVERSE CRANK DIR -** Reverses direction of jog handle.
1 **DISABLE TOOL CHANGER -** Disables tool changer operations.
2 **DISABLE GEARBOX -** Disables gearbox functions.
3 **POWER OFF AT E-STOP -** Stops spindle, then turns the power off at Emergency Stop.
4 **RIGID TAPPING -** Indicates hardware option for rigid tap.
5 **REV SPINDLE ENCODER -** Reverses sense direction of spindle encoder.
6 **UNUSED**
7 **EXACT STOP MODE CHG -** Selects exact stop in moves when mode changes.
8 **UNUSED**UNUSED.
9 **SPINDLE DRV LIN ACCEL -** Selects linear deceleration for rigid tapping. 0 is quadratic.
10 **UNUSED**

11 **COOLANT SPIGOT -** Enables coolant spigot control and display.

12 **OVER TEMP IS N/C -** Selects Regen over temp sensor as NC.

13 **UNUSED**

14 **NONINV SPINDLE STOP -** Non-inverted spindle stopped status.

15 **SPIND. LOAD MONITOR -** Spindle load monitor option is enabled.

16 **SPIND. TEMP MONITOR -** Spindle temperature monitor option is enabled.

17 **ENABLE ROT & SCALNG -** Enables rotation and scaling.

18 **ENABLE DNC -** Enables DNC selection from MDI.

19 **UNUSED**

20 **ENABLE GROUND FAULT -** Enables ground fault detector.

21 **M19 SPINDLE ORIENT. -** Makes the P and R codes a protected feature, only enabled with an unlock code. The unlock code is printed on the parameter listing. If this bit is set to 0, an M19 will orient the spindle to 0 degrees, regardless of the value of any P or R code in the same block. If it is set to 1, a P code in the block will cause the spindle to be oriented to the specified angle; such as P180. Alternately, a decimal R code can be used, such as R180.53. Note that the P and R codes only work on a vector drive machine.

22 **ENABLE MACRO -** Enables macro functions.

23 **INVERT SKIP -** Invert sense of skip to active low = closed.

24 **HANDLE CURSOR -** Enable use of jog handle to move cursor.

25 **NEGATIVE WRK OFFSET -** Selects use of work offsets in negative direction.

26 **TRANS OIL LOW PRESS -** Enables transmission low oil pressure detection.

27 **QUICK CODE -** Enables conversational programming.

28 **OILER ON/OFF -** Enables oiler power when servos or spindle is in motion.

29 **INV BUSS PWR FAULT -** Inverts sense of over voltage signal. It must be set to zero on machines with a standard vector drive, and 1 on machines with a Smart Vector Drive or Mini Power Supply.

30 **SPINDLE ENCODER #2 -** Enables a second encoder that is mounted on the spindle motor and wired into the C-axis input of the MOCON. It controls the vector algorithm on a belted machine when the belts slip at high load. When two encoders are present, the first is mounted on the spindle or output of the transmission, and is wired to the “spindle” input on the MOCON. Most mills use a single encoder that is mounted on either the spindle (transmission output) or spindle motor, but always connected to the spindle input on the MOCON.

31 **UNUSED-** UNUSED

## 58 LEAD COMPENS SHIFT

Shift factor when applying lead screw compensation. Lead screw compensation is based on a table of 256 offsets; each +\-127 encoder steps. A single entry in the table applies over a distance equal to two raised to this parameter power encoder steps.

## 59 MAX FEED (Inch/Min)

Maximum feedrate in inches per minute.

## 60 (L) TURRET IN POS DELAY

Amount of time to delay after the turret rotates to the tool position. This delay allows the turret to settle.

## 60 (M) TURRET START DELAY

Maximum delay allowed in start of tool turret. Units are milliseconds. After this time, an alarm is generated. On Horizontal mills with a side-mount tool changer, this parameter is used to specify the time (in milliseconds) allowed for motor driven motions of the shuttle and arm. If the motion has not completed within the time allowed by this parameter, Alarm 696, ATC Motor Time Out is generated.

## 61 (L) TURRET LOCK DELAY

Amount of time to delay after the turret is sensed to be locked. This delay allows for mechanical settling.

## 61 (M) TURRET STOP DELAY

Maximum delay allowed in motion of tool turret. Units are milliseconds. After this time, an alarm is generated. On Horizontal mills with a side-mount tool changer, this parameter is used to specify the time (in milliseconds) allowed for air-pressure driven arm in/arm out moves. If the motion has not completed within the time allowed by this parameter, Alarm 695, ATC Air Cylinder Time Out is generated.

## 62 (L) TURRET UNLK ERRTIME
Maximum delay allowed for tool turret to unlock. Units are milliseconds. After this time, an alarm is generated.

## 62 (M) SHUTTLE START DELAY
The time (in milliseconds) needed to allow the tool pocket to settle (stop bouncing) after being lowered in preparation for a tool change.

## 63 (L) TURRET LOCK ERRTIME
Maximum delay allowed for tool turret to lock. Units are milliseconds. After this time, an alarm is generated.

## 63 (M) SHUTTLE STOP DELAY
Also used for vertical mills with Side-Mount Tool Changer. Specifies the time allowed (in milliseconds) for the tool arm motor to stop. If the arm has not stopped after the allowed time, Alarm 627, ATC Arm Position Timeout is generated.

## 64 Z TOOL CHANGE OFFSET
For turret, displacement from home switch to tool 0.

**On Vertical mills:** For Z-axis; displacement from home switch to tool change position and machine zero. About 4.6 inches, so for an 8192 line encoder this gives: **4.6 x 138718 = 638103**

Alternately used for machines with type 4 servo axis pallet changer. It positions the pallet for a pallet change. For example, Z-axis travel on the EC-400 is done by moving the pallet, not the column, and therefore will not affect a tool change. Also, Parameter 64 is generally used during zero return, and that usage is consistent in the EC-400.

## 65 NUMBER OF TOOLS
Number of tool positions in tool changer. This number must be set to the configuration of the machine. The maximum number of tool positions is 32, except for Horizontal mills with a side-mount tool changer.

## 66 SPINDLE ORI DELAY
Maximum delay allowed when orienting spindle. Units are milliseconds. After this time, an alarm is generated.

## 67 GEAR CHANGE DELAY
Maximum delay allowed when changing gears. Units are milliseconds. After this time, an alarm is generated.

## 68 (M) DRAW BAR MAX DELAY
Maximum delay allowed when clamping and unclamping tool. Units are milliseconds. After this time, an alarm is generated.

## 69 A AIR BRAKE DELAY
Delay provided for air to release from brake on A-axis prior to moving. Units are milliseconds.

## 70 MIN SPIN DELAY TIME
Minimum delay time (in milliseconds) in program after commanding new spindle speed and before proceeding.

## 71 (L) SPIN STALL DET DELAY
Time to delay after spindle is started before spindle stall checking is started. Each unit is 1/50 of a second.

## 71 (M) DRAW BAR OFFSET
Offset provided in motion of Z-axis to accommodate the tool pushing out of the spindle when unclamping. Units are encoder steps.

## 72 (L) LIVE TOOL CHNG DLAY
Amount of time (in milli seconds) to wait after commanding the Live Tooling Drive motor to turn at the velocity specified by parameter 143. This process is required to engage the live tooling motor and tool and is only performed prior to the first M133 or M134 after a tool change.

## 72 (M) DRAW BAR Z VEL UNCL
Speed of motion in Z-axis to accommodate tool pushing out of the spindle when unclamping. Units are encoder steps per second.

## 73 SP HIGH G/MIN SPEED

Command speed used to rotate spindle motor when orienting spindle in high gear. Units are maximum spindle rpm divided by 4096. This parameter is not used in machines equipped with a Haas vector drive.

## 74 SP LOW G/MIN SPEED

Command speed used to rotate spindle motor when orienting spindle in low gear. Units are maximum spindle rpm divided by 4096. This parameter is not used in machines equipped with a Haas vector drive.

## 75 GEAR CHANGE SPEED

Command speed (maximum spindle rpm divided by 4096) used to rotate spindle motor when changing gears.

## 76 LOW AIR DELAY

Delay allowed after sensing low air pressure before alarm is generated. Alarm skipped if air pressure returns before delay. Units are 1/50 second.

## 77 SP LOCK SETTLE TIME

Required time in milliseconds that the spindle lock must be in place and stable before spindle orientation is considered complete.

## 78 GEAR CH REV TIME

Time in milliseconds before motor direction is reversed while in a gear change.

## 79 SPINDLE STEPS/REV

Sets the number of spindle encoder steps per revolution of the spindle. This number takes into account the pulley ratio between transmission and spindle, plus transmission and encoder. If there are 2 encoders employed, this number applies to the encoder on the spindle (connected to the SP input of the mocon). If only 1 encoder is employed, it will be for that encoder. In most installations, the single encoder will be mounted on the motor but will still connect to the SP input of the mocon.

## 80 MAX SPIN DELAY TIME

Maximum delay time (in milliseconds) control will wait for spindle to get to commanded speed or to get to zero speed.

## 81 M MACRO CALL O9000

M code that will call O9000. This parameter can contain a value from 1 through 98, inclusive. Zero causes no call; however, it is best to use a value that is not already in use (see current M code list). When using M37, the value 37 would be entered in Parameter 81 (for example). A program would be written to include the M37:

```
G X0...
M37
.
.
M30
```

The control would run the program until it got to the M37, call program O9000, run that, return to the point that it left, and continue the main program. Be aware that, if program O9000 contains another M37, it will call itself, keep calling until it fills the stack (9 times), and then alarm out with 307, Subroutine Nesting Too Deep. Note that if M33 (for example) is used, it would override the normal M33 Conveyor Stop function.

## 82 M MACRO CALL O9001

See Parameter 81 for description.

## 83 M MACRO CALL O9002

See Parameter 81 for description.

## 84 M MACRO CALL O9003

See Parameter 81 for description.

## 85 M MACRO CALL O9004

See Parameter 81 for description.

## 86 M MACRO CALL O9005

See Parameter 81 for description.

## 87 M MACRO CALL O9006
See Parameter 81 for description.

## 88 M MACRO CALL O9007
See Parameter 81 for description.

## 89 M MACRO CALL O9008
See Parameter 81 for description.

## 90 M MACRO CALL O9009
See Parameter 81 for description.

## 91 G MACRO CALL O9010
G code that calls O9010, and can contain a value from 1 through 98, inclusive. Zero causes no call; however, it is best to use a value that is not already in use (see current G code list). When using G45, the value 45 would be entered in Parameter 91 (for example).

A program would be written to include the G45:

```
G X0...
G45
.
.
M30
```

The control would run the program until it got to the G45, call program O9010, run that, return to the point that it left, and continue the main program. If program O9010 contains another G45, it will call itself, keep calling until it fills the stack (4 times), and then alarm out with 531, Macro Nesting Too Deep. Note that if G84 (for example) is used, it would override the normal G84 Tapping Canned Cycle.

## 92 G MACRO CALL O9011
See Parameter 91 for description.

## 93 G MACRO CALL O9012
See Parameter 91 for description.

## 94 G MACRO CALL O9013
See Parameter 91 for description.

## 95 G MACRO CALL O9014
See Parameter 91 for description.

## 96 G MACRO CALL O9015
See Parameter 91 for description.

## 97 G MACRO CALL O9016
See Parameter 91 for description.

## 98 G MACRO CALL O9017
See Parameter 91 for description.

## 99 G MACRO CALL O9018
See Parameter 91 for description.

## 100 G MACRO CALL O9019
See Parameter 91 for description.

## 101 X IN POSITION LIMIT
How close the motor must be to the endpoint before any move is considered complete when not in exact stop (G09 or G61). Units are encoder steps. As of mill version 9.06, this parameter does not apply to feeds. This parameter should be equivalent to .050 inches.

## 102 Y IN POSITION LIMIT
See Parameter 101 for description.

**103 Z IN POSITION LIMIT**
See Parameter 101 for description.

**104 A IN POSITION LIMIT**
See Parameter 101 for description.

**105 X MAX CURRENT**
Fuse level in % of max power to motor. Applies only when motor is stopped.

Corresponds to maximum peak current provided by the amplifier. 4095 = 30A (small amp), 45A (Medium amp), or 60A (large amp).

**106 Y MAX CURRENT**
See Parameter 105 (M) for description.

**107 Z MAX CURRENT**
See Parameter 105 (M) for description.

**108 A MAX CURRENT**
See Parameter 105 (M) for description.

**109 X D*D GAIN**
Second derivative gain in servo loop.

**110 Y D*D GAIN**
Second derivative gain in servo loop.

**111 Z D*D GAIN**
Second derivative gain in servo loop.

**112 A D*D GAIN**
Second derivative gain in servo loop.

**113 X ACC/DEC T CONST**
Exponential acceleration time constant. Units are 1/10000 seconds. This parameter provides for a constant ratio between profiling lag and servo velocity at the endpoint of a rapid motion. It is also the ratio between velocity and acceleration.

**114 Y ACC/DEC T CONST**
See Parameter 113 for description.

**115 Z ACC/DEC T CONST**
See Parameter 113 for description.

**116 A ACC/DEC T CONST**
See Parameter 113 for description.

**117 LUB CYCLE TIME**
If this is set nonzero, it is the cycle time for the lube pump. The Lube pressure switch option is checked for cycling in this time. It is in units of 1/50 second.

**118 SPINDLE REV TIME**
Time in milliseconds to reverse spindle motor.

**119 SPINDLE DECEL DELAY**
Time in milliseconds to decelerate spindle motor.

**120 SPINDLE ACC/DECEL**
Accel/decel time constant in 200ths of a step/ms/ms for spindle motor.

**121 X PHASE OFFSET**
The motor phase offset for X motor. Constant value, the value has no units.

**122 Y PHASE OFFSET**
The motor phase offset for Y motor. Constant value, the value has no units.

**123 Z PHASE OFFSET**
The motor phase offset for Z motor. Constant value, the value has no units.

**124 A PHASE OFFSET**
The motor phase offset for A motor. Constant value, the value has no units.

**125 X GRID OFFSET**
Shifts the effective position of the encoder Z pulse. It can correct for a motor or home switch positioning error.

**126 Y GRID OFFSET**
Shifts the effective position of the encoder Z pulse. It can correct for a motor or home switch positioning error.

**127 Z GRID OFFSET**
Shifts the effective position of the encoder Z pulse. It can correct for a motor or home switch positioning error.

**128 A GRID OFFSET**
Shifts the effective position of the encoder Z pulse. It can correct for a motor or home switch positioning error.

**129 GEAR CH SETTLE TIME**
Gear change settle time. This is the number of one millisecond samples that the gear status must be stable before considered in gear.

**130 GEAR STROKE DELAY**
Controls the delay time to the gear change solenoids when performing a gear change.

**131 MAX SPINDLE RPM**
Maximum rpm available to the spindle. When this speed is programmed, the D-to-A output will be +10V and the spindle drive must be calibrated to provide this.

**132 Y SCREW COMP. COEF.**
Coefficient of heating of the ballscrew, and is used to decrease or shorten the screw length.

**133 Z SCREW COMP. COEF.**
Coefficient of heating of the ballscrew, and is used to decrease or shorten the screw length.

**134 X EXACT STOP DIST.**
This parameter controls how close the axis must be to its end point when exact stop is programmed. They apply in G09 and G64.They are in units of encoder steps. A value of 34 would give **34/138718 = 0.00025 inch. To change the value of this parameter permanently, the machine must be rebooted.**

**135 Y EXACT STOP DIST.**
This parameter controls how close the axis must be to its end point when exact stop is programmed. They apply in G09 and G64.They are in units of encoder steps. A value of 34 would give **34/138718 = 0.00025 inch. To change the value of this parameter permanently, the machine must be rebooted.**

**136 Z EXACT STOP DIST.**
This parameter controls how close the axis must be to its end point when exact stop is programmed. They apply in G09 and G64.They are in units of encoder steps. A value of 34 would give **34/138718 = 0.00025 inch. To change the value of this parameter permanently, the machine must be rebooted.**

**137 A EXACT STOP DIST.**
This parameter controls how close the axis must be to its end point when exact stop is programmed. They apply in G09 and G64.They are in units of encoder steps. A value of 34 would give **34/138718 = 0.00025 inch. To change the value of this parameter permanently, the machine must be rebooted.**

**138 X FRICTION COMPENSAT**
Compensate for friction on the axis. The units are in 0.004V.

**139 Y FRICTION COMPENSAT**
Compensate for friction on the axis. The units are in 0.004V.

### 140 Z FRICTION COMPENSAT
Compensate for friction on the axis. The units are in 0.004V.

### 141 A FRICTION COMPENSAT
Compensate for friction on the axis. The units are in 0.004V.

### 142 HIGH/LOW GEAR CHANG
Sets the spindle speed at which an automatic gear change is performed. Below this parameter, low gear is the default; above this, high gear is the default.

### 143 (L) LIVE TOOL CHNG VEL
Velocity to command the Live Tooling Drive motor for the period specified by Parameter 72. This process is required to engage the live tooling motor and tool, and is only performed prior to the first M133 or M134 after a tool change.

### 143 (M) DRAW BAR Z VEL CLMP
Sets the speed of the Z-axis motion that compensates for tool motion during tool clamping. Units are in encoder steps per second.

### 144 RIG TAP FINISH DIST
Sets the finish tolerance for determining the end point of a rigid tapping operation. Units are encoder counts.

### 145 X ACCEL FEED FORWARD
Set the feed forward gain for the axis servo. Constant value, it has no units.

### 146 Y ACCEL FEED FORWARD
Set the feed forward gain for the axis servo. Constant value, it has no units.

### 147 Z ACCEL FEED FORWARD
Set the feed forward gain for the axis servo. Constant value, it has no units.

### 148 A ACCEL FEED FORWARD
Set the feed forward gain for the axis servo. Constant value, it has no units.

### 149 (M) PRE-CHARGE DELAY
Sets the delay time from precharge to tool release. Units are milliseconds.

### 150 MAX SP RPM LOW GEAR
Maximum spindle rpm in low gear.

### 151 B SWITCH A
See Parameter 1 for description.

### 152 B P GAIN
See Parameter 2 for description.

### 153 B D GAIN
See Parameter 3 for description.

### 154 B I GAIN
See Parameter 4 for description.

### 155 B RATIO (Steps/Unit)
See Parameter 47 for description.

### 156 B MAX TRAVEL (Steps)
See Parameter 6 for description. Normally this parameter would not apply to the A axis; however, this parameter is used on mills with a gimbaled spindle (5-axes mills). On a VR-series mill this parameter is used to limit the amount of angular movement of the spindle (A and B axes). The A and B axes are limited in movement to a distance between negative **Max Travel** and positive **Tool Change Offset**. On 5-axes mills A and B axes **Rot Trvl Lim** must be set to 1, **Max Travel** and **Tool Change Offset** must be calibrated and set correctly.

**157 B ACCELERATION**
See Parameter 7 for description.

**158 B MAX SPEED**
See Parameter 8 for description.

**159 B MAX ERROR**
See Parameter 9 for description.

**160 B FUSE LEVEL**
See Parameter 10 for description.

**161 B BACK EMF**
See Parameter 11 for description.

**162 B STEPS/REVOLUTION**
See Parameter 12 for description.

**163 B BACKLASH**
See Parameter 13 for description.

**164 B DEAD ZONE**
See Parameter 14 for description.

**165 B IN POSITION LIMIT**
Same definition as Parameter 101.

**166 B MAX CURRENT**
Same definition as Parameter 105.

**167 B D*D GAIN**
Second derivative gain in servo loop.

**168 B ACC/DEC T CONST**
Same definition as Parameter 113.

**169 B PHASE OFFSET**
The motor phase offset for B motor. Constant value, the value has no units.

**170 B GRID OFFSET**
Shifts the effective position of the encoder Z pulse. It can correct for a motor or home switch positioning error.

**171 B EXACT STOP DIST.**
This parameter controls how close the axis must be to its end point when exact stop is programmed. They apply in G09 and G64.They are in units of encoder steps. A value of 34 would give **34/138718 = 0.00025 inch. To change the value of this parameter permanently, the machine must be rebooted.**

**172 B FRICTION COMPENSAT**
Compensate for friction on the axis. The units are in 0.004V.

**173 B ACCEL FEED FORWARD**
Set the feed forward gain for the axis servo. Constant value, it has no units.

**174 B SCREW COMP. COEF.**
Coefficient of heating of the ballscrew, and is used to decrease or shorten the screw length.

**175 B AIR BRAKE DELAY**
Delay provided for air to release from brake on B-axis prior to moving. Units are milliseconds.

Note: The C-axis parameters (176-200) are used to control the Haas Vector Drive. Parameter 278 bit Haas Vect Dr must be set to 1 for these parameters to be available.

**176 Sp SWITCH A**
See Parameter 1 for description.

**177 Sp P GAIN**
See Parameter 2 for description.

**178 Sp D GAIN**
See Parameter 3 for description.

**179 Sp I GAIN**
See Parameter 4 for description.

**180 Sp SLIP GAIN**
Calculated slip rate depends on two other variables: speed and current. Slip rate = slip gain x (speed/max speed) x (current/max current). The slip gain value is the value that slip rate would assume at maximum speed, and maximum current (16.384 =1 Hz).

**181 Sp MIN SLIP**
Minimum value allowed from the slip rate. From the equation: Slip rate = slip gain x (speed/max speed) x (current/max current). It can be seen that at a zero speed, the slip rate would become zero; therefore, a minimum value for slip rate is required (16.384 = 1 Hz).

**182 Sp ACCELERATION**
Maximum acceleration of axis. The value is the units of encoder steps/second/second at the motor.

**183 Sp MAX FREQ**
See Parameter 8 for description. Frequency at which the motor will be run when maximum spindle rpm is commanded. Units: 0.01 Hz (two implied decimal places).

**184 Sp MAX ERROR**
Maximum allowable error (in Hz) between commanded spindle speed and actual speed. If set to zero, it will default to 1/4 of Parameter 183.

**185 Sp FUSE LEVEL**
See Parameter 10 for description.

**186 Sp DECELERATION**
See Parameter 10 for description. Maximum deceleration of axis in encoder steps per second per second.

**187 Sp MOT HI GEAR ST/REV**
Used when a Vector Drive is installed. It takes on two meanings, depending on how many spindle encoders are used on the machine. If only one encoder is present, it is the number of encoder steps per mechanical revolution of the spindle motor when the transmission is in high gear. (On direct drive machines, the encoder is mounted on the motor, while on others, it is on the spindle or transmission output.) N = (Encoder steps/enc rev)/(Enc pulley ratio X High Gear Ratio). For machines with a spindle and spindle motor encoder, it is the number of spindle motor encoder steps per mechanical revolution of the encoder. Its purpose is to specify the resolution of the spindle motor encoder. This parameter is used in conjunction with Parameter 176 bits 25 and 26, which control the ratio between the electrical revolution of the motor to the mechanical revolution of the encoder. If a vector drive is not installed, this parameter is called **Steps/Revolution** and is not used.

**188 Sp ORIENT GAIN**
Proportional gain used in the position control loop when performing a spindle orientation.

**189 Sp BASE FREQ**
Rated frequency of the motor.

**190 Sp HI SP CURR LIM**
At speeds higher than the base frequency, the maximum current that is applied to the motor must be reduced. This is done linearly from base frequency to max frequency. This value is the max current at the max frequency.

**191 Sp MAX CURRENT**
Sets maximum current allowed from the vector drive to the spindle motor: 4095 = max.

**192 Sp MAG CURRENT**
Magnetization component of the current in the motor, also called the flux or field current.

**193 Sp SPIN ORIENT MARGIN**
When a spindle orientation is done, if the actual position of the spindle is within this value (plus or minus), the spindle will be considered locked. Otherwise, the spindle will not be locked.

**194 Sp SPINDLE STOP FREQ**
Spindle considered stopped (discrete input SP ST*=0) when speed drops below this value. Units are encoder steps/millisecond.

**195 Sp START/STOP DELAY**
This delay is used at the start of motion to magnetize the rotor before acceleration starts. When the motor comes to a stop it remains energized for this amount of time. Units are in milliseconds.

**196 Sp ACCEL LIMIT LOAD**
Used when a Vector Drive is installed. It is % load limit during acceleration. If load reaches this limit, control slows down acceleration. If Vector Drive not installed, it is called C-axis **Exact Stop Distance**, and not used.

**197 Sp SWITCH FREQUENCY**
Frequency at which the spindle motor windings are switched. Note that there is a hysteresis band around this point, defined by Parameter 198.

**198 Sp SWITCH HYSTERESIS**
Defines the + hysteresis band around Parameter 197. For example, if Parameter 197 is 85 Hz, and Parameter198 is 5 Hz, the switching will take place at 90 Hz when the spindle is speeding up, and at 80 Hz when the spindle is slowing down.

**199 Sp PRE-SWITCH DELAY**
Amount of time allowed for the motor current to drop before winding change contactors are switched.

**200 Sp POST-SWITCH DELAY**
Amount of time allowed for contactors to stabilize after switch is commanded, before current is applied to motor.

**201 X SCREW COMP. COEF.**
Coefficient of heating of the ballscrew and is used to shorten the screw length.

**202 X AIR BRAKE DELAY**
Not used.

**203 Y AIR BRAKE DELAY**
Delay provided for air to release from brake on A-axis prior to moving. Units are milliseconds.

**204 Z AIR BRAKE DELAY**
Delay provided for air to release from brake on A-axis prior to moving. Units are milliseconds.

**205 (L) A SCREW COMP. COEF.**
Coefficient of heating of the ballscrew, and is used to decrease or shorten the screw length.

**205 (M) A SCR EW COMP. COEF.**
This parameter should be set to 0.

**206 (M) SPIGOT POSITIONS**
Vertical mills only. Maximum number of spigot positions.

**207 (M) SPIGOT TIMEOUT (MS)**
Vertical mills only. Maximum timeout allowed for spigot to traverse one spigot location.

## 208 SPIN. FAN OFF DELAY

Delay for turning the spindle fan off after the spindle has been turned off.

## 209 (L) COMMON SWITCH 2

Parameter 209 is a collection of general purpose single bit flags used to turn some functions on and off. Use left and right cursor arrows to select the function being changed. All values are 0 or 1 only. Function names are:

0 **LATHE T.C. -** Designates control as a lathe.

1 **RESET STOPS TL CHGR -** Tool changer can be stopped with Reset button.

2 **UNUSED**

3 **ENABLE CHIP CONVEYR -** Enables chip conveyor, if machine is so equipped.

4 **UNUSED**

5 **FRONT DOOR -** When enabled, control looks for additional door switch and generates operator message.

6 **UNUSED**

7 **UNUSED**

8 **UNUSED**

9 **SPIGOT KEY INVERT**

10 **T SUBROUTINE**

11 **RESERVED**

12 **REVERSED CONVEYOR -** Reverses the direction of the chip conveyor.

13 **M27-M28 CONVEYOR -** Usually the chip conveyor motor and direction relays are attached to the user relays M21 M22. When this bit is set, the control expects to see the conveyor hooked up to M27 and M28.

14 **RESERVED**

15 **GREEN BEACON -** When (1) user relay M25 is used to flash a beacon. If the control is in a reset state, the beacon will be off. If the control is running normally, the beacon will be steadily on. If the control is in a M00, M01, M02, M30 feedhold, or single block state, then the beacon will flash.

16 **RED BEACON -** When (1) user relay M26 is used to flash a beacon. The beacon flashes if the control is experiencing an alarm or emergency stop condition.

17 **UNUSED-** UNUSED

18 **DISABLED COOLANT IN**

19 **T.C. FWD CW -** Determines the direction that the turret moves as viewed from the spindle, when the turret is commanded forward. When (1), the turret will rotate clockwise for a forward command, and when (0), it will rotate counterclockwise. The default is 1.

20 **REMOTE TOOL RELEASE -** Supports the VTC-48. It specifies that the machine has a remote tool release button. It should be set to 1 on the VTC-48 and zero on all other lathes.

21 **FLOPPY ENABLE -** Enables an installed floppy disk drive.

23 **RESERVED**

24 **hpC ENABLE -** When set to zero, the machine will behave normally. When set to 1, the High Pressure Coolant pump can be turned on with M88 (this will first turn off the regular coolant if it was on, just like an M9). High Pressure Coolant can be turned off with M89. Note also that if a tool change is commanded when the hpC pump is running, it will be turned off, followed by a pause of the length specified by Parameter 237. hpC must then be turned back on by the user's program.

25 **AUX JOG NACC -** Does not allow accumulation on auxiliary axis jog. If the jog handle is moved rapidly the auxiliary axis will not develop extremely large lags.

27 **RAPID EXSTOP -** Default is 1. When this bit is set to 1, the control will execute an exact stop after all rapid motions, regardless of the next motion. When set to zero, the control will exact stop after a rapid only if the next motion is not a rapid move.

28 **UNUSED** UNUSED

29 **HYDRAULICS -** Must be set to 1 if a lathe has the hydraulic chuck clamping option.

30 **STALL DETECT -** Enables detection of spindle stall. If spindle stalls, the spindle motor is stopped and an alarm is generated.

31 **SPINDLE NOWAIT -** When (1), the machine will not wait for the spindle to come up to speed immediately after an M03 or M04 command. Instead, it will check and/or wait for the spindle to come up to speed immediately before the next interpolated motion is initiated. This bit does not affect rigid tapping.

## 209 (M) COMMON SWITCH 2

Parameter 209 is a collection of general purpose single bit flags used to turn some functions on and off. Use left and right cursor arrows to select the function being changed. All values are 0 or 1 only. Function names are:

0 **HS SERIES CNC -** Set to one for HS series mills; set to zero for all other mills.

1 **RESET STOPS TL CHGR -** Tool changer can be stopped with Reset button.

2 **CHAIN TOOL CHANGER -** On all HS mills with the 60 or 120 pocket chain-style tool changer, it must be set to 1. On all other mills, it must be set to zero.

3 **ENABLE CHIP CONVEYR -** Enables chip conveyor, if machine is so equipped.

4 **50% RAPID KEYBOARD -** When (1) the control will support the 50% rapid traverse key. For controls without a 50% rapid keypad set this bit to (0).

5 **FRONT DOOR -** When enabled, control looks for additional door switch and generates operator message.

6 **NO Z HOME IN TL CHG -** Horizontal mills only. Prevents Z-axis motion to machine zero prior to tool change.

7 **M36 AUTO PAL ROTATE -** Horizontal only. When set to (1), an M36 rotates the A-axis after the Part Ready button is pressed.

8 **AUX AXIS TL CHANGER -** Horizontal mills only. When enabled, means the tool changer carousel is driven by an aux. axis.

9 **SPIGOT KEY INVERT -** Controls the direction the spigot moves when the Coolant Up and Coolant Down buttons are pressed. Changing this bit reverses the direction the spigot moves when the buttons are pressed. It has no effect on the direction the spigot moves when commanded by the M34 and M35 codes.

12 **REVERSE CONVEYOR -** Reverses the direction of the chip conveyor.

13 **PRE-ORIENT TAP -** When this parameter bit is set to 1, a spindle orient command is issued automatically prior to the repeat rigid tap function.

14 **UNUSED**

15 **GREEN BEACON -** When (1) user relay M25 is used to flash a beacon. If the control is in a reset state, the beacon will be off. If the control is running normally, the beacon will be steadily on. If the control is in a M00, M01, M02, M30 feedhold, or single block state, the beacon will flash.

16 **RED BEACON -** When (1) user relay M26 is used to flash a beacon. The beacon flashes if the control is experiencing an alarm or emergency stop condition.

17 **UNUSED-** UNUSED

18 **DISABLE COOLANT IN -** If set to 1, low coolant input will not be used.

19 **UNUSED**

20 **REMOTE TOOL RELEASE -** If set to 1, allows use of remote tool release button on spindle head.

21 **FLOPPY ENABLE -** If set to 1, enables the optional disk drive.

22 **TL CHG RECOV KEYPAD -** If set to 1, enables tool changer restore button on keypad.

23 **UNUSED**

24 **TSC ENABLE -** When set to 1, **DSBL CLNT IN** bit is ignored, M24, M54, and M64 are disabled, and TSC will operate. When set to zero, the control functions normally.

25 **AUX JOG NACC -** If the jog handle is moved rapidly, the auxiliary axis will not develope extremely large lags.

26 **ALIAS M PROGR START -** Alias M codes during program restart.

27 **DISABLE JOG TEST -** Disables the encoder test for the jog handle.

28 **NO ZERO CLAMP -** During zero return of pallet changer, the general sequence is 1) lift, 2) home, 3) lower. When this bit is set to 1, only the first two steps are executed. The pallet remains in the unclamp position. This bit was added to prevent damage to the pallet changer prior to Grid Offset and Tool Change Offset (zero return offset for the pallet changer axis) set up.

29 **PAL READY BUTTON -** Accommodates both APC on vertical mill and Rotary Pallet Changer on Horizontal mill. This bit should be set to 1 on 2-pallet APC's to designate a single pallet button configuration. Four pallet APC's have a 2 schedule pallet button and should have this bit set to zero. This bit should be zero on Horizontal Mills, since it is intended for future pallet changer software that replaces the macro program.

30 **UNUSED**

31 **SPINDLE NOWAIT -** When (1), the machine will not wait for the spindle to come up to speed immediately after an M03 or M04 command. Instead, it checks and/or waits for it to come up to speed immediately before the next interpolated motion is initiated. This bit does not affect rigid tapping or the TSC option.

## 210 X TOOL CHANGE OFFSET

Used on the HS-2RP mill for X axis displacement from the home position to tool change position. **If this parameter**

**contains an incorrect value, a horizontal mill will crash when it does a tool change.**

### 211 (L) Y TOOL CHANGE OFFSET
Servo Autodoor—Offset distance from operator door closed switch to the desired closed position (units are encoder steps). This is always a positive number.

### 211 (M) Y TOOL CHANGE OFFSET
Used on the HS-2RP mill for Y axis displacement from the home position to tool change position. **If this parameter contains an incorrect value, a horizontal mill will crash when it does a tool change.**

### 212 A TOOL CHANGE OFFSET
Sets the distance between the **A**-axis grid offset (Parameter 128) and the spindle home position. The **A**-axis is limited in movement to the area between the positive value of this parameter and the negative **Max Travel**.

### 213 (M) B TOOL CHANGE OFFSET
Sets the distance between the **B**-axis grid offset (Parameter 170) and the spindle home position. The **B**-axis will be limited in movement to the area between the positive value of this parameter and the negative **Max Travel**. This parameter must be used on all mills with the 60 or 120 pocket chain-style tool changer, as opposed to Parameter 215, Carousel Offset, which is used on other side-mount tool changers. Note that on a machine with a single MOCON board, the Tt-axis parameters are automatically copied to the B-axis parameters and only the Tt-axis parameters can be altered.

### 214 Sp D:Y CURRENT RATIO
Defines the ratio between the two winding configurations. The default winding is Y, and the parameters are set for the Y winding. Used to adjust the parameters for the delta winding when the windings are switched.

### 215 (M) CAROUSEL OFFSET
Horizontal mills only. Precisely aligns tool 1 of tool changing carousel. Units are encoder steps.

### 216 CNVYR RELAY DELAY
Delay time in 1/50 seconds required on conveyor relays before another action is commanded.

### 217 CNVYR IGNORE OC TIM
Amount of time in 1/50 seconds before overcurrent is checked after conveyor motor is turned on.

### 218 COVYR RETRY REV TIM
Amount of time that the conveyor is reversed in 1/50 seconds after overcurrent is sensed.

### 219 CNVYR RETRY LIMIT
Number of times that the conveyor will cycle through the reverse/forward sequencing when an overcurrent is sensed, before the conveyor will shut down. An overcurrent is sensed when chips jam the conveyor. By reversing and then forwarding the conveyor, the chip jam may be broken.

### 220 CNVYR RETRY TIMEOUT
Time in 1/50 seconds between consecutive overcurrents in which an overcurrent is considered to be another retry. If this time passes between overcurrents, the retry count is set to (0).

### 221 MAX TIME NO DISPLAY
Maximum time (in 1/50 sec.) between screen updates.

### 222 (L) LOW HYD. IGNORE TIM
Amount of time that the control ignores the LO HYD input bit after servos are engaged. The hydraulic unit requires a short period of time to come up to pressure.

### 222 (M) ROTARY AXIS INCRMNT
For Horizontal mills only. Sets the degrees of rotation of the A-axis at an M36 or Pallet Rotate.

### 223 (M) AIR TC DOOR DELAY
For Horizontal mills only. Sets the delay to open the tool changer door (in milliseconds). If the tool changer does not have a pneumatic door, this parameter is set to zero.

### 224 (M) ROT AXIS ZERO OFSET
Shifts the zero point of A for a wheel fixture or tombstone.

### 225 (M) MAX ROT AXIS ALLOW
For Horizontal mills with a wheel fixture only. Sets the maximum rotation (in degrees) allowed before stopping at front door.

### 226 EDITOR CLIPBOARD
Assigns a program number (nnnnn) to the contents of the clipboard (for the advanced editor).

### 227 FLOPPY DIR NAME
When the disk drive is enabled and a directory is read, the directory listing is placed into a program as comments. The program is then made the current program so the user can read the contents of the disk drive. This parameter designates where to write the directory listing.

### 228 QUICKCODE FILE
Sets the program numbers to store in the Quick Code definition program.

### 229 X LEAD COMP 10E9
Sets the X-axis lead screw compensation signed parts per billion.

### 230 Y LEAD COMP 10E9
Sets the Y-axis lead screw compensation signed parts per billion.

### 231 Z LEAD COMP 10E9
Sets the Z-axis lead screw compensation signed parts per billion.

### 232 A LEAD COMP 10E9
Sets the A-axis lead screw compensation signed parts per billion.

### 233 B LEAD COMP 10E9
Sets the B-axis lead screw compensation signed parts per billion.

### 235 (L) AUTO DOOR PAUSE
Supports the Auto-Door feature. It specifies the length of a pause (in 50ths of a second) that occurs during the door close sequence. As the door closes and the switch is activated, the motor is turned off for this amount of time and the door coasts. This allows the door to close smoothly. This parameter should be set to 3 (0.06 seconds) nominally. It works in conjunction with Parameter 236.

### 235 (M) TSC PISTON SEAT
With the 50 TSC option, the amount of time given for the piston to seat during system start-up. The default is 500 milliseconds. If machine has a **50 Taper spindle** and the TSC option, this parameter **must be set to 0**.

### 236 (L) AUTO DOOR BUMP
Supports the Auto-Door feature. It specifies the length of time (in 50ths of a second) that the motor should be reactivated after the pause specified by parameter 235. This causes the motor to close the door fully and smoothly. This parameter should be set to 15 (0.3 seconds) nominally.

### 236 (M) TSC LOW PR FLT
After the TSC system has stabilized following start-up, Alarm 151 is generated if coolant pressure falls below 40 psi for the amount of time set in this parameter.

### 237 (L) HPC PRESSURE BLEED
Supports the hpC (High Pressure Coolant) feature. It is the amount of time given for the coolant to purge when the hpC system is shut off.

### 237 (M) TSC CLNT LINE PURGE
Amount of time given for the coolant to purge when the TSC system is shut off. May be increased to a higher value to help purge coolant from small orifice tooling.

### 238 (L) SPINDLE AT SPEED %
Allows program to command spindle to certain speed and then continue to next block before spindle has actually reached that speed. This is intended to make G-code programs run faster because the spindle can usually finish accelerating while approaching the part. It is recommended that this parameter be set to 20. The result will be that the lathe will act as though the spindle is at speed when it is within +/-20% of the commanded speed.

**238 (M) TSC MAX SPINDLE RPM**
When TSC is enabled and in use, this parameter limits the maximum spindle speed.

**239 SPNDL ENC STEPS/REV**
Sets the number of encoder steps per revolution of the spindle encoder.

**240 1ST AUX MAX TRAVEL**
Sets the maximum travel of the first auxiliary (C) axis in the positive direction.

**241 2ND AUX MAX TRAVEL**
Sets the maximum travel of the second auxiliary (U) axis in the positive direction.

**242 3RD AUX MAX TRAVEL**
Sets the maximum travel of the third auxiliary (V) axis in the positive direction.

**243 4TH AUX MAX TRAVEL**
Sets the maximum travel of the fourth auxiliary (W) axis in the positive direction.

**244 1ST AUX MIN TRAVEL**
Sets the maximum travel of the first auxiliary (C) axis in the negative direction.

**245 2ND AUX MIN TRAVEL**
Sets the maximum travel of the second auxiliary (U) axis in the negative direction.

**246 3RD AUX MIN TRAVEL**
Sets the maximum travel of the third auxiliary (V) axis in the negative direction.

**247 4TH AUX MIN TRAVEL**
Sets the maximum travel of the fourth auxiliary (W) axis in the negative direction.

**248 (L) CHUCK UNCLAMP RPM**
rpm above which the chuck will not operate. If the spindle is spinning faster than this value the chuck will not open, and if it is spinning slower than this value the chuck will open. The default is 0, for safety.

**248 (M) SMTC RLY ON/OFF DLY**
Vertical mills with sidemount tool changers only. It specifies the time needed (in milliseconds) between turning off one relay and turning on the other one, when reversing the carousel.

**249 (L) CHUCK CLAMP DELAY**
Dwell time allowed after clamping the chuck (an M10 command). Program execution will not continue until this time has expired. Units are in milliseconds.

**249 (M) TOOL CLAMP DELAY**
Provides a delay after the tool has been clamped and before retraction of the tool carousel at the end of a tool change. For most mills, this parameter should be set to zero. Units are milliseconds.

**250 (L) CHUCK UNCLAMP DELAY**
Dwell time allowed after unclamping the chuck (an M11 command). Program execution will not continue until this time has expired. Units are in milliseconds.

**250 (M) TOOL UNCLAMP DELAY**
Provides a delay after the tool has been unclamped and before the spindle is backed away at the beginning of a tool change. For most mills, this parameter should be set to zero. Units are in milliseconds.

**251 A DOOR OPEN ERRTIME**
Supports the Auto-Door feature. It is used for several things:

1) It specifies the number of 50ths of a second for the motor to run to open the door.

2) Parameter value plus one second specifies number of 50ths of a second for the motor to run to close the door.

3) If, at the end of the door-close time, the door has not yet reached the switch, Alarm 238, Door Fault is generated.

## 252 (L) TAIL ST. OVERLOAD -

Determines overload limit when the tailstock is traveling in the minus direction, toward the spindle. It is an arbitrary value based on effective voltage being sent to the tailstock servo motor. If too low, you may not be able to move the tailstock. Increase the value until you are able to move the tailstock. It is used for ball screw tailstock or TL-15.

## 252 (M) GEAR MOTOR TIMEOUT

Supports the Auto-Door feature. It specifies the length of time (in ms) that is allowed for the door to begin opening. If the door does not move off the door-closed switch within this amount of time, Alarm 238, Door Fault is generated.

## 253 (L) TAIL ST. OVERLOAD +

Determines overload limit when tailstock is traveling in positive direction, away from spindle. Value for Parameter 253 should be approximately twice the value of Parameter 252. It is used for ballscrew tailstock or TL-15.

## 253 (M) SPIGOT FWD POS DLY

Specifies the length of a delay (units are ms) when moving the coolant spigot forward. This parameter should be set to zero on all machines.

## 254 (L) SPINDLE CENTER

Reserved for service use only.

## 254 (M) TC AIR DOOR CLEARANCE

Incorporates the X-axis door clearance for the Mini-horizontal. This position is used during a tool change to avoid hitting the tool changer door, since part of the door enters the machining area during a tool change.

This parameter also supports the VB-1 Bridge Mill tool carousel air door. The air door is a clamshell shaped door covering the tool carousel, which raises up at one side by air power to allow the spindle to access the tools. In order for it to open and close, there must be sufficient clearance between it and the spindle. This parameter must be set to the correct value (in encoder units), Parameter 223, Air TC Door Delay must be set to a non-zero value, Parameter 267, Zero Axis TC must be set to 1, and Parameter 278, TC DR Switch must be set to 1. When a tool change is commanded, the following steps are performed:

1) The Y-axis is moved to the position specified by Parameter 254.
2) The air door is commanded to open.
3) There is a delay specified by Parameter 223 to allow the door to open fully.
4) The Y-axis is moved to zero and the tool change is performed.
5) The Y-axis is moved to the position specified by Parameter 254.
6) The air door is commanded to close.
7) There is a delay specified by Parameter 223 to allow the door to close fully.

## 255 CONVEYOR TIMEOUT

The number of minutes the conveyor will operate without any motion or keyboard action. After this time, the conveyor will automatically shut off. Note that this parameter value will cause the conveyor to turn off even if the intermittent feature is functioning. Note also that if this parameter is set to zero, the chip conveyor will shut off immediately, i.e., pressing CHIP FWD or CHIP REV will not turn it on.

## 256 PALLET LOCK INPUT

The setting for EC-300 must be 26, the EC-400 must be 32, and the MDC-1 must be 27, or Alarm 180 will occur when the spindle is turned on. This parameter should be set to zero on all lathes.

## 257 SPINDL ORIENT OFSET

If equipped with spindle vector drive (as set in bit 7 of Parameter 278), this bit sets spindle orientation offset. The offset is the number of encoder steps between Z pulse and correct spindle orientation position. It is used to orient the spindle properly anytime it needs to be locked, such as prior to a tool change, or orient spindle command.

## 258 (M) COLD SPINDLE TEMP

The first time Cycle Start is pressed after the machine has been turned on, control compares microprocessor temperature (in degrees Fahrenheit) against value of this parameter. If microprocessor is colder, control assumes spindle is too cold or inadequately lubricated to be run safely at high speed and the following message is displayed:

**!!!WARNING!!!**
**YOUR MACHINE IS COLD, RUN A WARM-UP PROGRAM BEFORE RUNNING THE SPINDLE AT HIGH SPEED OR DAMAGE MAY RESULT**
**PRESS 'CANCEL' TO CONTINUE**

The user must press Cancel before continuing. It is recommended that a spindle warm-up program be run immediately. This message will only appear once each time the machine has been turned on. The initial value for this

parameter is 70 (degrees F). To disable this feature, change it to zero.

## 259 (M) COLD SPINDLE DAYS

The first time Cycle Start is pressed after the machine is turned on, the control will compare the number of days that have passed since the machine was turned off against the value of this parameter. If the machine has been off longer, the control will assume that the spindle is too cold or inadequately lubricated to be run safely at high speed and the following message will be displayed:

**!!!WARNING!!!**
**YOUR MACHINE IS COLD, RUN A WARM-UP PROGRAM BEFORE RUNNING THE SPINDLE AT HIGH SPEED OR DAMAGE MAY RESULT**
**PRESS 'CANCEL' TO CONTINUE**

The user must press CANCEL before continuing. It is recommended that a spindle warm-up program be run immediately. This message will only appear once each time the machine has been turned on. The initial value for this parameter is 3 (days). To disable this feature, change it to 999999.

## 266 (L) X SWITCH B

Parameter 266 is a collection of single-bit flags used to turn servo related functions on and off. The left and right cursor arrows are used to select the function being changed. All values are 0 or 1 only. The function names are:

- **0** **X LIN SCALE EN** - Used to enable linear scales for the X-axis.
- **1** **X INVRT LN SCL** - Used to invert the X-axis linear scale.
- **2** **UNUSED** - Unused
- **3** **TH SNSR COMP** - Used for Ballscrew Thermal Compensation via a temperature sensor attached to the ball nut. When this bit is set to 1, the feature is activated for that axis. Note that the feature can only be used when temperature sensors are installed. The following parameters must be set appropriately:
- **4** **X 2ND HOME BTN** - Moves axis to coordinate specified in Work Ofset G129.
- **5** **X NEG COMP DIR** - Negates the direction of thermal compensation.
- **6** **X DELAY AXIS 0** - When set, indicates that this axis should be zeroed in Phase II of the zeroing process rather than the default, Phase I.
- **7** **MAX TRAV INP**
- **8** **NO ZERO/NOHOME** - Intended for lathes with extra tools mounted on the outside of the turret. If this bit is set to zero, it has no effect. If set to 1, the associated axis will not move whenPower Up/Restart, Home G28 or Auto All Axes is pressed. The reason for this feature is to help prevent collisions between tools mounted on the outside of the turret and a sub-spindle mounted on the tailstock. It is important to note that a single axis Home G28 (e.g., press Z then Home G28) and any G28 specified in a program will still cause the axis to move regardless of the value of the parameter bit. Operator must exercise care when commanding any axis move.
- **11** **X REVERSE DIR** - Reverse direction of power to motor.
- **12** **X AMP DECODE** - Governs how amplifier alarms are generated. A 0 indicates an old model amplifier and 1 indicates a smart amplifier.

## 266 (M) X SWITCH B

Parameter 266 is a collection of single-bit flags used to turn servo related functions on and off. The left and right cursor arrows are used to select the function being changed. All values are 0 or 1 only. The function names are:

- **0** **X LIN SCALE EN** - Enables linear scales for the X axis.
- **1** **X INVRT LN SCL** - Inverts the X-axis linear scale.
- **2** **DSBL SCALE Z** - Disables the linear scale Z test.
- **3** **X ZERO AXIS TC** - Returns axis to the position specified by the Tool Change Offset parameter prior to a tool change. On mills with a gimbaled spindle, this bit must be set to 1 on the A and B axes (Parameter 269 and 270) and 0 on all other axes.
- **4** **X 2ND HOME BTN** - Moves axis to coordinate specified in Work Offset G129.
- **5** **X NEG COMP DIR** - Negates the direction of thermal compensation.
- **6** **X DELAY AXIS 0** - Used with an APL to ensure X-axis is zeroed before A-axis of APL
- **7** **X MAX TRAVEL INP** - This bit is set to 1 on five axis machines. This bit indicates that there is a switch (visible through MOCON) that detects if the axis has rotated all the way round. It is used to tell the control to skip the first zero switch when zeroing so it can unwrap the cables.
- **8** **LINEAR SCALE MOTOR ZERO** - When set to 1, this bit causes zeroing with the rotary motor instead of the rotary scales. Normally set to zero.

9 **X TEMP SENSOR** - Performs Ballscrew Thermal Compensation via a temperature sensor attached to the ball nut. When this bit is set to 1, the feature is activated for that axis. Note that this feature can only be used when temperature sensors are installed.

10 **IGNORE INDEXER SWITCH**

12 **AMP DECODE** - Specifies how amplifier alarms are generated. 0 indicates an old model amplifier; 1 indicates a smart amplifier.

16 **SCALE Z HIST** - For Haas diagnostic use only.

## 267 (L) Y SWITCH B

Parameter 267 is a collection of single-bit flags used to turn servo related functions on and off. The left and right cursor arrows are used to select the function being changed. All values are 0 or 1 only. The function names are:

0 **Y LIN SCALE EN** - Enables linear scales for the Y-axis.

1 **Y INVRT LN SCL** - Inverts the Y-axis linear scale.

2 **UNUSED** - Unused

3 **TH SNSR COMP** - Used for Ballscrew Thermal Compensation via a temperature sensor attached to the ball nut. When this bit is set to 1, the feature is activated for that axis. Note that the feature can only be used when temperature sensors are installed.

4 **Y 2ND HOME BTN** - Moves the axis to coordinate specified in Work Ofset G129

5 **Y NEG COMP DIR** - Negates the direction of thermal compensation

6 **Y AXIS DELAY 0** - When set, indicates that this axis should be zeroed in Phase II of the zeroing process rather than the default, Phase I.

7 **MAX TRAV INP**

8 **NO ZERO/NOHOME** - Intended for lathes that have extra tools mounted on the outside of the turret. If this bit is set to zero, it will have no effect. If it is set to 1, the associated axis will not move when Power Up/Restart, Home G28 or Auto All Axes is pressed. The reason for this feature is to help prevent collisions between tools mounted on the outside of the turret and a sub-spindle mounted on the tailstock. It is important to note that a single axis Home G28 (e.g., press Z then Home G28) and any G28 specified in a program will still cause the axis to move regardless of the value of this parameter bit. The operator must exercise care when commanding any axis move.

11 **Y REVERSE DIR** - Reverse direction of power to motor.

## 267 (M) Y SWITCH B

Parameter 267 is a collection of single-bit flags used to turn servo related functions on and off. The left and right cursor arrows are used to select the function being changed. All values are 0 or 1 only. The function names are:

0 **Y LIN SCALE EN** - Enables linear scales for the Y-axis.

1 **Y INVRT LN SCL** - Inverts the Y-axis linear scale.

2 **DSBL SCALE Z** - Disables the linear scale Z test.

3 **Y ZERO AXIS TC** - Returns axis to the position specified by the Tool Changer Offset parameter prior to a tool change. On mills with a gimbaled spindle, this bit must be set to 1 on the A and B axes (Parameter 269 and 270) and 0 on all other axes.

4 **Y 2ND HOME BTN** - Moves the axis to coordinate specified in Work Offset G129.

5 **Y NEG COMP DIR** - Negates the direction of thermal compensation.

6 **Y DELAY AXIS 0** - Used with an APL to ensure Y-axis is zeroed before A-axis of APL.

7 **Y MAX TRAVEL INP** - This bit is set to 1 on five axis machines. This bit indicates that there is a switch (visible through MOCON) that detects if the axis has rotated all the way round. It is used to tell the control to skip the first zero switch when zeroing so it can unwrap the cables.

9 **Y TEMP SENSOR** - Performs Ballscrew Thermal Compensation via a temperature sensor attached to the ball nut. When this bit is set to 1, the feature is activated for that axis. Note that this feature can only be used when temperature sensors are installed.

16 **SCALE Z HIST** - For Haas diagnostic use only.

## 268 (L) Z SWITCH B

Parameter 268 is a collection of single-bit flags used to turn servo related functions on and off. The left and right cursor arrows are used to select the function being changed. All values are 0 or 1 only. The function names are:

0 **Z LIN SCALE EN** - Enables linear scales for the Z-axis.

1 **Z INVRT LN SCL** - Inverts the Z-axis linear scale.

2 **UNUSED** - Unused

3 **TH SNSR COMP** - Used for Ballscrew Thermal Compensation via a temperature sensor attached to the ball nut. When this bit is set to 1, the feature is activated for that axis. Note that the feature can only be used when temperature sensors are installed.

4 **Z 2ND HOME BTN** - Moves the axis to coordinate specified in Work Ofset G129

5 **Z NEG COMP DIR** - Negates the direction of thermal compensation

6 **Z AXIS DELAY AXIS 0** - When set, indicates that this axis should be zeroed in Phase II of the zeroing process rather than the default, Phase I.

7 **MAX TRAV INP**

8 **NO ZERO/NOHOME** - Intended for lathes that have extra tools mounted on the outside of the turret. If this bit is set to zero, it will have no effect. If it is set to 1, the associated axis will not move when Power Up/Restart, Home G28 or Auto All Axes is pressed. The reason for this feature is to help prevent collisions between tools mounted on the outside of the turret and a sub-spindle mounted on the tailstock. It is important to note that a single axis Home G28 (e.g., press Z then HOME G28) and any G28 specified in a program will still cause the axis to move regardless of the value of this parameter bit. Exercise care when commanding any axis move.

11 **Z REVERSE DIR** - Reverse direction of power to motor.

12 **Z AMP DECODE** - Governs how amplifier alarms are generated. A 0 indicates an old model amplifier and 1 indicates a smart amplifier.

## 268 (M) Z SWITCH B

Parameter 268 is a collection of single-bit flags used to turn servo related functions on and off. The left and right cursor arrows are used to select the function being changed. All values are 0 or 1 only. The function names are:

0 **Z LIN SCALE EN** - Enables linear scales for the Z-axis.

1 **Z INVRT LN SCL** - Inverts the Z-axis linear scale.

2 **DSBL SCALE Z** - Disables the linear scale Z test.

3 **Z ZERO AXIS TC** - Returns axis to the position specified by the Tool Changer Offset parameter prior to a tool change. On mills with a gimbaled spindle, this bit must be set to 1 on the A and B axes (Parameter 269 and 270) and 0 on all other axes.

4 **Z 2ND HOME BTN** - Moves the axis to coordinate specified in Work Offset G129.

5 **Z NEG COMP DIR** - Negates the direction of thermal compensation.

6 **Z DELAY AXIS 0** - Used with an APL to ensure Z-axis is zeroed before A-axis of APL

7 **Z MAX TRAVEL INP** - This bit is set to 1 on five axis machines. This bit indicates that there is a switch (visible through MOCON) that detects if the axis has rotated all the way round. It is used to tell the control to skip the first zero switch when zeroing so it can unwrap the cables.

9 **Z TEMP SENSOR** - Performs Ballscrew Thermal Compensation via a temperature sensor attached to the ball nut. When this bit is set to 1, the feature is activated for that axis. Note that this feature can only be used when temperature sensors are installed.

16 **SCALE Z HIST** - For Haas diagnostic use only.

## 269 (L) A SWITCH B

Parameter 269 is a collection of single-bit flags used to turn servo related functions on and off. The left and right cursor arrows are used to select the function being changed. All values are 0 or 1 only. The function names are:

0 **A LIN SCALE EN** - Enables linear scales for the A-axis.

1 **A INVRT LN SCL** - Inverts the A-axis linear scale.

2 **UNUSED** - Unused

3 **TH SNSR COMP** - Used for Ballscrew Thermal Compensation via a temperature sensor attached to the ball nut. When this bit is set to 1, the feature is activated for that axis. Note that the feature can only be used when temperature sensors are installed.

4 **A 2ND HOME BTN** - Moves the axis to coordinate specified in Work Ofset G129

5 **A NEG COMP DIR** - Negates the direction of thermal compensation

6 **A DELAY AXIS 0** - When set, indicates that this axis should be zeroed in Phase II of the zeroing process rather than the default, Phase I.

7 **MAX TRAV INP**

8 **NO ZERO/NOHOME** - Intended for lathes that have extra tools mounted on the outside of the turret. If this bit is set to zero, it will have no effect. If it is set to 1, the associated axis will not move when Power Up/Restart, Home G28 or Auto All Axes is pressed. The reason for this feature is to help prevent collisions between tools mounted on the outside of the turret and a sub-spindle mounted on the tailstock. It is important to note that a single axis Home G28 (e.g., press Z then Home G28) and any G28 specified in a program will still cause the axis to move regardless of the value of this parameter bit. Exercise care when commanding any axis move.

11 **A REVERSE DIR** - Reverse direction of power to motor.

12 **Z AMP DECODE** - Governs how amplifier alarms are generated. A 0 indicates an old model amplifier and 1 indicates a smart amplifier.

## 269 (M) A SWITCH B

Parameter 269 is a collection of single-bit flags used to turn servo related functions on and off. The left and right cursor arrows are used to select the function being changed. All values are 0 or 1 only. The function names are:

0 **A LIN SCALE EN** - Enables linear scales for the A-axis.

1 **A INVRT LN SCL** - Inverts the A-axis linear scale.

2 **DSBL SCALE Z** - Disables the linear scale Z test.

3 **A ZERO AXIS TC** - Returns axis to position specified by Tool Changer Offset parameter prior to a tool change.

4 **A 2ND HOME BTN** - Moves the axis to coordinate specified in Work Offset G129.

5 **A NEG COMP DIR** - Negates the direction of thermal compensation.

6 **A DELAY AXIS 0** - Used with an APL to ensure A-axis is zeroed before B-axis of APL.

7 **A MAX TRAVEL INP** - This bit is set to 1 on five axis machines. This bit indicates that there is a switch (visible through MOCON) that detects if the axis has rotated all the way round. It is used to tell the control to skip the first zero switch when zeroing so it can unwrap the cables.

9 **A TEMP SENSOR** - Performs Ballscrew Thermal Compensation via a temperature sensor attached to the ball nut. When this bit is set to 1, the feature is activated for that axis. Note that this feature can only be used when temperature sensors are installed.

16 **SCALE Z HIST** - For Haas diagnostic use only.

## 270 (L) B SWITCH B

Parameter 270 is a collection of single-bit flags used to turn servo related functions on and off. The left and right cursor arrows are used to select the function being changed. All values are 0 or 1 only. The function names are:

0 **B LIN SCALE EN** - Enables linear scales for the B-axis.

1 **B INVRT LN SCL** - Inverts the B-axis linear scale.

2 **UNUSED** - Unused

3 **TH SNSR COMP** - Used for Ballscrew Thermal Compensation via a temperature sensor attached to the ball nut. When this bit is set to 1, the feature is activated for that axis. Note that the feature can only be used when temperature sensors are installed.

4 **B 2ND HOME BTN** - Moves the axis to coordinate specified in Work Ofset G129

5 **B NEG COMP DIR** - Negates the direction of thermal compensation

6 **B DELAY AXIS 0** - When set, indicates that this axis should be zeroed in Phase II of the zeroing process rather than the default, Phase I.

7 **MAX TRAV INP**

8 **NO ZERO/NOHOME** - Intended for lathes that have extra tools mounted on the outside of the turret. If this bit is set to zero, it will have no effect. If it is set to 1, the associated axis will not move when Power Up/Restart, Home G28 or Auto All Axes is pressed. The reason for this feature is to help prevent collisions between tools mounted on the outside of the turret and a sub-spindle mounted on the tailstock. It is important to note that a single axis Home G28 (e.g., press Z then Home G28) and any G28 specified in a program will still cause the axis to move regardless of the value of this parameter bit. Exercise care when commanding any axis move.

11 **B REVERSE DIR** - Reverse direction of power to motor.

12 **B AMP DECODE** - Governs how amplifier alarms are generated. A 0 indicates an old model amplifier and 1 indicates a smart amplifier.

## 270 (M) B SWITCH B

Parameter 270 is a collection of single-bit flags used to turn servo related functions on and off. The left and right cursor arrows are used to select the function being changed. All values are 0 or 1 only. The function names are:

0 **B LIN SCALE EN** - Enables linear scales for the B-axis.

1 **B INVRT LN SCL** - Inverts the B-axis linear scale.

2 **DSBL SCALE Z** - Disables the linear scale Z test.

3 **B ZERO AXIS TC** - Returns axis to the position specified by the Tool Changer Offset parameter prior to a tool change. On mills with a gimbaled spindle, this bit must be set to 1 on the A and B axes (Parameter 269 and 270) and 0 on all other axes. On all mills with 60 or 120 pocket chain-style tool changer, this bit must be set to 1. It will cause to tool changer offset parameter to be used for tool changes.

4 **B 2ND HOME BTN** - Moves the axis to coordinate specified in Work Offset G129.

5 **B NEG COMP DIR** - Negates the direction of thermal compensation.

6 **B DELAY AXIS 0** - Used with an APL to ensure B-axis is zeroed before A-axis of APL.

7 **B MAX TRAVEL INP** - This bit is set to 1 on five axis machines. This bit indicates that there is a switch (visible through MOCON) that detects if the axis has rotated all the way round. It is used to tell the control to skip the first zero switch when zeroing so it can unwrap the cables.

9 **B TEMP SENSOR** - Performs Ballscrew Thermal Compensation via a temperature sensor attached to the ball nut. When this bit is set to 1, the feature is activated for that axis. Note that this feature can only be used when temperature sensors are installed.

16 **SCALE Z HIST** - For Haas diagnostic use only.

## 271 (L) Sp SWITCH B

Parameter 271 is a collection of single-bit flags used to turn servo related functions on and off. The left and right cursor arrows are used to select the function being changed. All values are 0 or 1 only. The function names are:

0 **C LIN SCALE EN** - Enables linear scales for the C-axis.

1 **C INVRT LN SCL** - Inverts the C-axis linear scale.

2 **UNUSED** - Unused

3 **TH SNSR COMP** - Used for Ballscrew Thermal Compensation via a temperature sensor attached to the ball nut. When this bit is set to 1, the feature is activated for that axis. Note that the feature can only be used when temperature sensors are installed.

4 **C 2ND HOME BTN** - Moves the axis to coordinate specified in Work Ofset G129

5 **C NEG COMP DIR** - Negates the direction of thermal compensation

6 **C DELAY AXIS 0 -** When set, indicates that this axis should be zeroed in Phase II of the zeroing process rather than the default, Phase I.

7 **MAX TRAV INP**

8 **NO ZERO/NOHOME** - Intended for lathes that have extra tools mounted on the outside of the turret. If this bit is set to zero, it will have no effect. If it is set to 1, the associated axis will not move when Power Up/Restart, Home G28 or Auto All Axes is pressed. The reason for this feature is to help prevent collisions between tools mounted on the outside of the turret and a sub-spindle mounted on the tailstock. It is important to note that a single axis Home G28 (e.g., press Z then Home G28) and any G28 specified in a program will still cause the axis to move regardless of the value of this parameter bit. Exercise care when commanding any axis move.

11 **Sp REVERSE DIR** - Reverse direction of power to motor.

12 **Sp AMP DECODE** - Governs how amplifier alarms are generated. A 0 indicates an old model amplifier and 1 indicates a smart amplifier.

## 271 (M) Sp SWITCH B

Parameter 271 is a collection of single-bit flags used to turn servo related functions on and off. This parameter is not used when the machine is equipped with a Haas vector drive. The left and right cursor arrows are used to select the function being changed. All values are 0 or 1 only. The function names are:

0 **C LIN SCALE EN -** Enables linear scales for the C-axis.

1 **C INVRT LN SCL -** Inverts the C-axis linear scale.

2 **DSBL SCALE Z -** Disables the linear scale Z test.

3 **C ZERO AXIS TC -** Returns axis to position specified by Tool Changer Offset parameter prior to a tool change.

4 **C 2ND HOME BTN -** Moves the axis to coordinate specified in Work Offset G129.

5 **C NEG COMP DIR -** Negates the direction of thermal compensation.

6 **C DELAY AXIS 0 -** Used with an APL to ensure C-axis is zeroed before A-axis of APL.

16 **SCALE Z HIST -** For Haas diagnostic use only.

## 272 X SCREW COMP T. CONST

Thermal compensation time constant, and is the time constant governing the rate of cool down of the screw.

## 273 Y SCREW COMP T. CONST

Thermal compensation time constant, and is the time constant governing the rate of cool down of the screw.

## 274 Z SCREW COMP T. CONST

Thermal compensation time constant, and is the time constant governing the rate of cool down of the screw.

## 275 (M) A SCREW COMP T. CONST

This parameter should be set to 0. See Parameter 201 for description.

## 276 B SCREW COMP T. CONST

This parameter should be set to 0. See Parameter 201 for description.

## 278 (L) COMMON SWITCH 3

Parameter 278 is a collection of general purpose single bit flags used to turn some functions on and off. Left and right cursor arrows are used to select function to change. All values are 0 or 1 only. Function names are:

0 **INVERT G.B. -** Default 0. Setting to 1 inverts discrete inputs sense for SP HIGH and LOW (high and low gear).

1 **UNUSED**

2 **UNUSED**

3 **CHK HIDDN MACRO VAR**

4 **DISPLAY ACTUAL rpm -** When set to 1, displays actual spindle speed on Current Commands display page.

5 **TSC PURGE ENABLE**

6 **HYDRAULIC TAILSTOCK -** Enables the hydraulic tailstock.

7 **SPINDLE DRIVE LOCK -** Must be set to 0 if machine is equipped with a Haas vector spindle drive.

8 **CHUCK OPEN CSTART -** When set to 1, the user can press Cycle Start and run a program with the chuck unclamped. If the spindle is commanded with this bit set to 1, the spindle will not exceed the Chuck Unclamp rpm (Parameter 248). This feature is ineffective when the CE safety circuit is enabled.

9 **CONCURRENT SPINDLE -** When set to 0, spindle start occurs at the end of a block, as in normal M code operation. When set to 1, spindle start occurs at the beginning of a block and concurrent with axis motion.

10 **TL SET PROBE -** Must be set to 1 in order to enable the Tool Pre-Setter.

11 **HAAS VECTOR DRIVE -** Must be set to 1 if machine is equipped with a Haas vector spindle drive. When set to 1, voltage to the vector drive is displayed in the diagnostics display as DC BUSS.

12 **uP ENCLOSURE TEMP** (Microprocessor enclosure temperature) - When set to 1, enclosure temperature will be displayed on INPUTS2 screen of the diagnostics display.

13 **HAAS REMOTE JOG HDL** (Haas remote jog handle) - Must be set to 1 if the machine is equipped with a Haas 5-axis Remote jog handle.

14 **SPIN MOTOR OTEMP NC** (Spindle Motor Over Temperature Normally Closed) - Type (normally open/normally closed) of spindle temperature sensor. Set to 1 for machines with Haas vector drive; 0 for machines without.

15 **SUBSP TMP NC** (Subspindle Temperature Sensor Normally Closed) - Type, (normally open/normally closed) of the subspindle temperature sensor.

16 **UNUSED**

17 **NO MFIN CKPU -** When it is set, it will prevent checking of MFIN at power-up.

18 **DEL:Y SWITCH ENABLE** (Delta Wye switch enable) - Used for machine with vector drive. If switch is set, but bit 19 is not, winding switching is only done when spindle is at rest, depending on the spindle target speed.

19 **DEL:Y SWITCH ON FLY** (Delta Wye switch enable) - Used for machine with a vector drive. This parameter enables switching on the fly, as the spindle motor is accelerating or decelerating through the switch point.

20 **CHK BARFEED STATUS -** Added for improved Bar Feeder interface. When set to 1, control constantly checks Bar Feeder Status on discrete input 1027. If this input goes high, Alarm 450, Bar Feeder Fault will be generated and the servos and spindle will be turned off. Note that the spindle will simply coast to a stop.

21 **CHK BF SPIND I-LOCK -** Added for improved Bar Feeder interface. When set to 1, the control constantly checks the Bar Feeder Spindle Interlock on discrete input 1030. If this input goes high, and the spindle is being commanded to turn, or coasting or being manually turned at 10rpm or more, Alarm 451, Bar Feeder Spindle Interlock is generated and servos and spindle are turned off. Note that the spindle will simply coast to a stop.

22 **UNUSED**

23 **UNUSED**

24 **LIVE TOOLING -** Bit = 1 for lathes fitted with Live Tooling. For all other lathes, this bit is set to 0.

25 **SUBSPINDLE -** Enables G14, G15, M143, M144, M145. Must be set to 1 for lathes with subspindle. When set to 1, control displays Function Locked when Auto All Axes, Home G28, or Power Up/Restart button is pressed.

26 **C AXIS DRIVE -** Enables M154 and M155. It must be set to 1 for all lathes with the C-axis.

27 **UNUSED**

28 **VSMTC ENABLE**

29 **DOOR SAFETY SW INV -** Supports CE door interlock that locks when power is turned off. For machines with door lock that locks when power is applied, set bit to 0. For machines with inverted door lock, set bit to 1.

30 **UNUSED**

31 **INV SPIND SPD DECEL** (Inverse spindle speed deceleration) - When this parameter is set to 1, the spindle decelerates faster at lower speeds, resulting in a shorter deceleration time.

## 278 (M) COMMON SWITCH 3

Parameter 278 is a collection of general purpose single bit flags used to turn some functions on and off. This bit will cause the machine to use discrete outputs 21 and 26 to command the shuttle to move in and out. On mills with the Air Driven Shuttle it must be set to 1. On all other mills it must be set to 0. The left and right cursor arrows are used to select the function being changed. All values are 0 or 1 only. The function names are:

0 **INVERT GEARBOX SIGS -** Allows an alternate gearbox configuration. It inverts the sense of the gearbox inputs. Used for 50 taper option.

1 **DPR SERIAL -** Causes the main serial inputs/outputs to go through the disk video board.

2 **(M) CHECK PALLET INPUT -** If set to 1, discrete input specified by Parameter 256, Pallet Lock Input is checked prior to execution of a spindle command. If the input is high (i.e., an open circuit), Alarm 180 is generated. The input is also checked while the spindle is turning and generates the same alarm if it goes high. Thus, the input can now be used to stop a program after the spindle has been commanded to turn (such as by a pressure switch from the user's clamp or fixture).

3 **CHK HIDDN MACRO VAR -** Used on horizontal mills only.

4 **DISPLAY ACTUAL rpm -** When set to 1, displays actual spindle speed on Current Commands display page.

5 **TSC PURGE ENABLE -** Enables purge output on TSC option.

6 **SINGLE CLAMP SWITCH -** Enables control to rely upon a single switch to detect clamp position of Side-Mount Tool Changer arm. When set to zero, both upper and lower switches are used to detect arm position. When set to one, only the lower switch is used. The control will now not wait until the upper switch is tripped to conclude the tool is clamped, so subsequent operations can begin immediately. This increases tool change speed.

7 **SPINDLE DRIVE LOCK -** Must be set to 1 if machine is equipped with a non-Haas vector spindle drive. This bit must be set to 1 if the machine has a 50 taper spindle or a non-Haas vector drive.

8 **UNUSED**

9 **CONCURENT SPINDLE -** When set to 1, the spindle is commanded to start concurrently with other commands in the same block. In the following example, with this bit set to 1, the spindle will start at the same time as the rapid move: **G0 X-1. S7500 M3;**

10 **HS3 HYDRAULIC TL CH -** Used with the 38-tool SMTC on the HS-3. When this is set to zero, the mill will behave normally. When it is set to 1, the control will recognize that the toolchanger is a 38-tool SMTC.

11 **HAAS VECTOR DRIVE -** Must be set to 1 if machine is equipped with a Haas vector spindle drive. When set to 1, voltage to the Haas vector drive is displayed in the diagnostics display as DC BUSS.

12 **uP ENCLOSURE TEMP** (Microprocessor Enclosure Temperature) - When set to 1, enclosure temperature will be displayed on INPUTS2 screen of the diagnostics display.

13 **HAAS REMOTE JOG HDL** (Haas Remote Jog Handle) - Must be set to 1 if the machine is equipped with a Haas 5-Axes Remote Jog Handle.

14 **SPIN MOTOR OTEMP NC** (Spindle Temperature Sensor Normally Closed) - Type (normally open/normally closed) of the spindle temperature sensor. This bit should be set to 1.

15 **AIR DRIVE SHUTTLE -** Causes machine to use discrete outputs 21 and 26 to command the shuttle to move in and out. On mills with the Air Driven Shuttle it must be set to 1. On all other mills it must be set to 0.

16 **GIMBAL SPINDLE -** Used on 5-axes mills. Causes the machine to check that the Z, A, and B axes are at zero before a tool change is started. If one is not, Alarm 150 will be generated. On mills with the gimbaled Spindle it must be set to 1. On all other mills it must be set to 0.

17 **NO MFIN CHK ON P-UP -** When this bit is set, it will prevent checking of MFIN at power-up. It should be set for 1 for all machines that have the Haas Automatic Pallet Changer attached, and 0 for all other machines.

18 **DEL:Y SWITCH ENABLE (Delta Wye switch enabled) -** Used for the Vector Drive. Enables the switching of spindle motor windings, provided the hardware Enable is installed, and the proper parameters are set. If this switch is set, but bit 19 is not, the winding switching will only be done when the spindle is at rest, depending on the target speed of the spindle.

19 **DEL:Y SWITCH ON FLY -** Enables switching on the fly, as the spindle motor is accelerating or decelerating through the switch point. If bit 18 is not set, this switch will be ignored.

20 **5 AX TOFS -X -** Used with G143 (modal 5 axes tool length compensation) on machines with a gimbaled spindle. If it is set to 1, this means that when the corresponding rotary axis is moved, the sign of the X Position must be inverted. Normally, this bit should be set to 0.

21 **5 AX TOFS -Y -** Used with G143 (modal 5 axes tool length compensation) on machines with a gimbaled spindle. If it is set to 1, when the corresponding rotary axis is moved, the sign of the Y Position must be inverted. Normally, this bit should be set to 0.

22 **B+C 5 AXES -** Used with G142 (modal 5 axes tool length compensation) on machines with a gimbaled spindle. The B-axis normally moves the A-axis, but if this is not true, this bit can be set to change which is the inner axis. Normally, this bit should be set to 0.

23 **TL CHGR DOOR SWITCH -** Horizontal tool carousel door configuration. This bit specifies the Horizontal Mill tool carousel door configuration. If it is set to 0, it indicates the configuration where the door is driven open by a timed operation. If it is set to 1, it indicates the configuration where the door is spring-loaded closed and is driven open by the timed operation against the door open switch. In open position, the door switch signal is 0 (low). Switch status is checked before and after commanding the door to open to be fail-safe.

For all horizontal mills with the switch installed, the bit is set to 1. For all other mills, this bit must be set to 0.

24 **HS2 SMTC CAROUSEL**

25 **HS3 SMTC CAROUSEL**

26 **S MNT BIT 1 -** Bits 26, 27, and 28 specify the type of sidemount tool changer installed on a vertical mill. The following table shows the bit combinations that must be used:

| Bit | 26 | 27 | 28 | |
|---|---|---|---|---|
| | 0 | 0 | 0 | No side-mount tool changer installed |
| | 1 | 0 | 0 | Serpentine 1 |
| | 0 | 1 | 0 | Serpentine 2 |
| | 1 | 1 | 0 | Serpentine 3 |
| | 0 | 0 | 1 | Disk 1 |
| | 1 | 0 | 1 | Disk 2 |
| | 0 | 1 | 1 | Disk 3 |
| | 1 | 1 | 1 | Disk 4 |

27 **S MNT BIT 2 -** Bits 26, 27, and 28 specify the type of sidemount tool changer installed on a vertical mill.

28 **S MNT BIT 3 -** Bits 26, 27, and 28 specify the type of sidemount tool changer installed on a vertical mill.

29 **DOOR SAFETY SW INV -** Suppotrts the CE door interlock that locks when power is turned off.

30 **SWAP A & C AXES -** Causes the A and C axes to be swapped internally.

31 **INV SPIND SPD DECEL** (Inverse Spindle Speed Deceleration) - When this parameter is set to 1, the spindle decelerates faster at lower speeds, resulting in a shorter deceleration time.

## 279 X SCALE GAIN MULT

Used on machines with linear scales. Linear scales are used to continuously correct any errors in encoder position. The parameter determines the gain of the correction factor; that is, how fast it corrects, and should be set to 40.

## 280 Y SCALE GAIN MULT

See Parameter 279 for description.

## 281 Z SCALE GAIN MULT

See Parameter 279 for description.

## 282 A SCALE GAIN MULT

See Parameter 279 for description.

## 283 B SCALE GAIN MULT

See Parameter 279 for description.

## 284 (M) Sp SCALE GAIN MULT

See Parameter 279 for description.

## 285 X LINEAR SCREW OFFS

Used on machines with linear scales. This parameter accounts for the unused portion of the ballscrew between zero and the actual motor.

### 286 Y LINEAR SCREW OFFS
See Parameter 285 for description.

### 287 Z LINEAR SCREW OFFS
See Parameter 285 for description.

### 288 (M) A LINEAR SCREW OFFS
See Parameter 285 for description. N/A for lathes.

### 289 (M) B LINEAR SCREW OFFS
See Parameter 285 for description. N/A for lathes.

### 291 (L) HYD TS NO MOT. TIME
Number in milliseconds that must pass with no B-axis encoder change before the control decides that the tailstock has stopped. The parameter affects homing and alarm situations on the tailstock. If the tailstock pressure is set low and the tailstock does not home properly then increase this parameter.

### 291 (M) LOW BRAKE OIL TIME
Supports EC-1600 A-axis brake oil sensor. Units are seconds. When set to non-zero number and sensor indicates low oil condition for more than that amount of time, control causes red beacon to flash and displays LOW BK OIL. If the low oil condition continues, Alarm 643, Low Brake Oil A-axis is generated when the program ends.

### 292 (L) HYD TS RTRACT MARGN)
Sets the acceptable range, in encoder steps, for the retract point. When the tailstock stops anywhere within this range, the control assumes it is at the retract point.

### 292 (M) AUTO DOOR PAUSE
Supports the Auto-Door feature. It specifies the length of a pause (in 50ths of a second) that occurs during the door close sequence. As the door closes and the switch is activated, the motor is turned off for this amount of time and the door coasts. This allows the door to close smoothly. It works in conjunction with Parameter 293.

### 293 (L) HYD TS SLOW DISTNCE
Sets the distance, prior to a target point, where the tailstock will transition from a rapid movement to a feed. For example, if this parameter is set to 30 (the default), this means the tailstock will slow to a feed 30 encoder steps before reaching the target point. Units are in encoder steps.

### 293 (M) AUTO DOOR BUMP
Supports the Auto-Door feature. It specifies the length of time (in 50ths of a second) that the motor should be reactivated after the pause specified by Parameter 292. This causes the motor to close the door fully and smoothly. This parameter should be set to 2 (0.04 seconds) nominally.

### 294 MIN BUSS VOLTAGE
Minimum Haas Vector Drive buss voltage. It should be set to 200 (the units are volts). Alarm 160 is generated if the voltage falls below this value.

### 295 (M) SHTL SETTLE TIME
Used on mills with an air driven shuttle. Allows settling time for the shuttle after it has moved toward the spindle and before a tool change is performed. It should be set to approximately half a second (500) on all mills with the air driven shuttle. This may vary. All other mills can be set to 0, since they are unaffected.

### 296 MAX OVER VOLT TIME
Specifies the amount of time (in 50ths of a second) that an overvoltage condition (Alarm 119, Over Voltage) will be tolerated before the automatic shut down process is started.

### 297 MAX OVER HEAT TIME
Specifies the amount of time (in 50ths of a second ) that an overheat condition (Alarm 122, Regen Overheat) will be tolerated before the automatic shut down process is started.

## 298 (L) Y AX RTAP BACKLASH

This parameter is normally set to zero, but can be adjusted by the user (to a number typically between 0 and 1000) to compensate for play in the center of the main spindle. It takes effect during G95 Subspidle Rigid Tap when the tool has reached the bottom of the hole and must reverse direction to back out.

## 298 (M) MAX FEED (DEG/MIN)

Used on 5-axis mills. Maximum rotary feedrate in degrees per minute. Any attempt at cutting faster than this will result in “LIM” being displayed next to the Feed message on the Program Command Check screen. On mills with a gimbaled spindle, this parameter must be set to 300. For all other mills,it should be set to 99999.

## 299 AUTOFEED-STEP-UP

Works with Autofeed. It specifies the feedrate step-up percentage per second and should initially be set to 10.

## 300 AUTOFEED-STEP-DOWN

Works with the Autofeed feature. It specifies the feedrate step-down percentage per second and should initially be set to 20.

## 301 AUTOFEED-MIN-LIMIT

Works with the Autofeed feature. It specifies the minimum allowable feedrate override percentage that the Autofeed feature can use and should initially be set to 1.

NOTE: In Lathes, the feed and spindle overrides will be locked out when tapping, so the Autofeed feature will be ineffective (although the display will appear to respond to the override buttons.)

NOTE: In Lathes, last commanded feedrate is restored at the end of the program execution, or when the operator presses Reset or turns off Autofeed.

NOTE: In Lathes, the operator may use the feedrate override buttons while the Autofeed feature is active. As long as tool load limit is not exceeded, these buttons will have the expected effect and the overridden feedrate will be recognized as the new commanded feedrate by the Autofeed feature. However, if the tool load limit has already been exceeded, the control will ignore the feedrate override buttons and the commanded feedrate will remain unchanged.

## 302 (M) FEED ACCEL MEDIUM

Supports the motion control feature. This is the acceleration that applies to feed motion in encoder steps per second squared selected by Setting 191 or the G187 command. For vertical mills, 1/2 of the value of Parameter 7 is a good starting point.

## 303 (M) FEED T CONST MEDIUM

Supports the motion control feature. It is the base 2 exponent of the feed time constant in milliseconds when Medium smoothness is selected by Setting 191 or the G187 command.

## 304 (L) SPINDLE BRAKE DELAY

Time (in milliseconds) to wait for the main spindle brake to unclamp when spindle speed has been commanded, and also the amount of time to wait after the main spindle has been commanded to stop before clamping it.

## 304 (M) SPIGOT REV POS DLY

Length of a delay (units are ms) when moving the coolant spigot in reverse. This parameter should be set to zero on all machines.

## 305 (L) SERVO PO BRK DLY

Time (in milliseconds) that the control should wait after turning off the Hyd Pump Enable relay (which will activate the brake) before turning off power to the servo motors via the MOCON. This is intended to allow time for the brake to engage.

## 305 (M) SERVO PO BRK DLY

The **SRV PO** (Servo Power On) discrete output is used to engage and disengage an axis brake. This parameter is used to specify a time in milliseconds that the control should wait after activating the **SRV PO** output and turning off power to the servo motors via the MOCON. This parameter also specifies the time to wait after deactivating the **SRV PO** output and reactivating the servo motors via the MOCON.

## 306 (M) POCKET UP/DN DELAY

Supports the side-mount tool changers. It specifies the time allowed (in milliseconds) for the tool pocket to be raised or lowered. If the pocket does not move to its commanded position within the time allowed by this parameter and by Parameter 62, Alarm 626, Tool Pocket Slide Error is generated.

## 307 (M) POCKT UN/LOCK DELAY

Supports side-mount tool changers. It specifies the time allowed (in milliseconds) to lock or unlock a tool pocket. For mills without a side-mount tool changer, this parameter should be set to 0.

## 308 (M) ARM ROTATE TIME

Supports the side-mount tool changers. It specifies the time allowed (in milliseconds) for the arm to rotate to the next position. The positions are, Clamp, Unclamp, and Origin. If the arm does not move to the commanded position within the allowed time, Alarm 622, Tool Arm Fault is generated. For mills without a side-mount tool changer, this parameter should be set to 0.

## 309 (M) ARM START TIMEOUT

Supports side-mount tool changers. It specifies time allowed for the tool changer to start only. If the arm has not moved after the allowed time, Alarm 627, ATC Arm Position Timeout is generated. Units are milliseconds.

## 310 (M) CAM LOCK DELAY

Supports side-mount tool changers. It specifies the time allowed (in milliseconds) to lock the cam by pushing the shot pin in, or to unlock the cam by pulling the shot pin out. If the shot pin has not moved to its commanded position within the allowed time, Alarm 625, Invalid TC Start Condition is generated.

## 311 (M) ARM BUMP TIME/DEG

Supports side-mount tool changers. During tool change recovery, the arm may be moved a small amount by pressing the ATC FWD or ATC REV key. Each press of the key will cause the arm motors to run for the amount of time (in milliseconds) specified by this parameter. For mills without a side-mount tool changer, this parameter should be set to 0.

For the high speed tool changer, this parameter specifies the number of thousandths of degrees to bump the arm (i.e., 1000 = 1 deg.)

On horizontal mills with a side-mount tool changer, the arm may be rotated a small amount by pressing the End or Page Down keys. The shuttle may be moved by pressing the Left Arrow or Right Arrow keys. Each press of the key causes the motor to run for the amount of time (in milliseconds) specified by this parameter.

## 312 (M) CAROUSEL BUMP TIME

Supports side-mount tool changers. During tool change recovery, the carousel may be moved a small amount by pressing the Left Arrow or Right Arrow key. Each press of the key will cause the carousel motors to run for the amount of time (in milliseconds) specified by this parameter. For mills without a side-mount tool changer, this parameter should be set to 0.

## 313 (M) POCKET INCREMENT

Used for the bridge mill. Under normal circumstances it should be set to 1. If, for example, it is set to 2, the control will only recognize every other pocket; that is, it will treat the tools and pockets as follows:

Tool 1 is in pocket 1
Tool 2 is in pocket 3
Tool 3 is in pocket 5
Tool 4 is in pocket 7 etc...

If this parameter is set to 3, the control will only recognize every third pocket, and so on. **It is the operator's responsibility to ensure that the total number of pockets in the tool changer is evenly divisible by this parameter value.** If not, the control will pick the wrong pocket after the carousel has exceeded a full revolution.

## 314 (M) FEED DELTA V MEDIUM

Supports motion control. It is the maximum change in velocity (in encoder steps per millisecond) allowed between motion steps when Medium smoothness is selected by Setting 191 or the G187 command. The basic value is given by the formula: (Feed Delta V) = (Feed Accel) times 2 to the power of (Feed T Const) divided by 1 million.

## 315 (L) COMMON SWITCH 4

**0** **ALIS M GRPHC -** All user defined M codes (such as M50) are ignored when a program is run in graphics mode if this bit is set to 0. If it is necessary to have graphics recognize such M codes, set this bit to 1.

**1** **NO SPIND CAN CYCLE**

**2** **UNUSED**

**3** **VERT TURNING CENTER -** Specifies that a machine is a vertical turning center.

**4** **UNUSED**

5 **DOOR OPEN SWITCH -** Ensures that when the door is opened automatically, it opens all the way. It is intended to be used in conjunction with an automatic parts loader. If this bit is set to zero, the control behaves as before. If this bit is set to 1, the control will look for a second door switch when the door is opened automatically. If the switch is not found, Alarm 127, Door Fault will be generated.

6 **SIMPLE TAILSTOCK -** Supports the SL-10 tailstock, which has no encoder. It should be set to 1 only on an SL-10 with a hydraulic tailstock. It should be set to zero on all other machines.

7 **BRUSHLESS BAR FEEDER -** Supports the brushless bar feeder. When it is set to 1, it indicates that a brushless bar feeder is present.

8 **UNUSED**

9 **AUTO PARTS LOADER -** Indicates that a Haas Lathe APL is installed. When this bit is set to 1, a Commands screen for the Haas APL is displayed.

10 **ZERO RET ON C ENGAGE -** Controls what C-axis does upon engagement. If set to zero, C-axis rapids to zero upon engagement. When set to 1, C-axis performs a zero return upon engagement. Note that in either case, spindle is oriented upon C-axis engagement. Note also, to avoid spindle oscillation during movement of C-axis, spindle is shifted to high gear (on lathes with a gearbox) before engaging C-axis.

11 **SETING 92 ENABLE -** Intended to prevent damage to lathes fitted with a pneumatic double-chuck. If Setting 92, Chuck Clamping is switched from O.D. to I.D. or back while the spindle is turning, the chuck is considered clamped in the opposite direction and will move immediately. A pneumatic double-chuck will be damaged if it is moved while the spindle is turning. This parameter bit must be set to 1 before Setting 92 can be altered, and since parameters can only be altered after E-Stop has been pressed, this ensures that the spindle will be at rest when the bit is altered. It is strongly advised that this bit be returned to zero immediately after use.

16 **SS REV SPIND ENCODR -** Reverses sense direction of subspindle encoder

17 **SS VEC DRIVE ENCODR -** Enables a second encoder mounted on the subspindle motor and wired into the “C” axis input of the Mocon. It is required to control the vector algorithm when a lathe’s belts might slip at high load.

18 **SS VEC DRIVE -** Must be set to 1 if the machine is equipped with a Haas vector subspindle drive. When set to 1, voltage to the Haas vector drive is displayed in the diagnostics display as DC BUSS. For the TL-15 and VTC-48, this bit must be set to 1. For all others, it must be set to 0.

19 **SS D:Y SWITCH ENABL** (Delta Wye switch enable) - Used for the vector drive. If this switch is set, but bit 19 is not, winding switching is only done when subspindle is at rest, depending on target speed of the subspindle.

20 **SS DY SWITCH ON FLY** (Delta Wye switch on the fly) - Used for vector drive. Enables switching on the fly, as subspindle motor is accelerating or decelerating through switch point. If bit 18 (SS Vec Drive) is not set, switch is ignored.

21 **SS IN SPD DC** (Subspindle Inverse Speed Deceleration) - When this parameter is set to 1, the subspindle decelerates faster at lower speeds, resulting in a shorter deceleration time.

22 **SS DISABLE GEARBOX -** Disables gearbox functions. For the TL-15 and VTC-48, this bit must be set to 1. For all others, it must be set to 0.

23 **RAPID HS FEED-** Enables straight line rapid moves. Normally, during a rapid move of two or more axes, the axis with the shorter distance will finish first. When this parameter is set to 1, the control will treat rapid moves as high-speed feeds, and all axes will complete their motion at the same time.

24 **SS INVERT GEARBOX -** Allows alternate gearbox configuration. Inverts sense of gearbox inputs. Default is 0. When set to 1, sense of discrete inputs for SP HIG and SP LOW (high and low gear) are inverted.

25 **POWER DISCONN RELAY -** This parameter when set to 1, with Parameter 57 (Safety Circ) set to 1, and the door is opened, I Gain on all the axes is cleared. This feature is intended to be used in conjunction with customer supplied hardware who require the servo power to be cut when the door is opened.

26 **STATUS RELYS**

27 **SS NONINV SPD STOP -** Sub-spindle non-inverted spindle stopped status.

28 **ADVANCED TOOL MGMT -** This parameter controls the Advanced Tool Management feature. When it is set to 1, the user can specify groups of tools. When the life of a tool (based on feed time, total time, usage, number of holes, tool load, or vibration) has expired, the control will automatically use another tool from the same group. When all the tools from a group are used up, the control will alarm. Refer to the User’s Manual for details.

29 **RND5 TRM/TRL -** This parameter is intended for tool room machines. When it is zero, the machine behaves as before. When set to 1, all X and Z position displays are rounded to .0005. This does not affect programming.

30 **RND5 HANDWHEEL -** This parameter is intended for tool room machines. When zero, the machine behaves as before. When set to 1, and the user is jogging an axis using the manual handle-wheels, the position displays will be rounded to .0005. This will not affect the operation of the standard jog handle or programming.

31 **INTUITIVE PROG SYS -** When it is set to 1, the Intuitive Programming System is activated.

## 315 (M) COMMON SWITCH 4

0 **ALIS M GRPHC -** When this bit is set to 0, all user defined M codes (such as M50, normally used to do a pallet change on a horizontal mill) are ignored when a program is run in graphics mode. If it is necessary to have graphics recognize such M codes, this bit should be set to 1.

1 **GANTRY**

2 **NO X MOVE NEXT TOOL -** Horizontal mills only, primarily intended for use on the HS-3. If this bit is set to zero, it will have no affect. If it is set to one, the X-axis will not move following a Next Tool button press. The reason for this is because after pressing Next Tool on an HS-1 or HS-2, the spindle, which is mounted on the X-axis, is moved closer to the operator so the next tool can be manually installed. On an HS-3, the X-axis is on the table and there is no advantage to moving it. Setting this bit to one will save time.

3 **EXTRA-LARGE TOOLS -** Specifies that large tools are considered to be extra large, and allows Tool Pocket table to be set up as shown below. This parameter bit should be set to 1 on all mills with the 50 Taper Side-Mount Tool Changer. It will enable the control to recognize tools that occupy three pockets. An example of a tool pocket table with extra large tools:

1 –
2 L
3 –
4 –
5 L
6 –

When this parameter bit is set to 1, the following tool pocket configuration is not allowed (see Alarm 422).

–
L
–
L
–

4 **HIGH SPD MACHINING -** Enables the High Speed Machining feature. It requires an unlock code in order to set the bit to 1. This option requires the Floating Point Co-Processor and Floating Point software. If this option is turned on when non-floating point software is installed, the High Speed option will have no effect.

5 **FAEMAT SPINDLE -** Controls the tool clamp and unclamp sequence for different spindles. This improvement is intended primarily for the VB-1 bridge mill.

6 **MANUAL TOOL CHANGER -** Must be set to 1 when a TM-1 has no tool changer, and zero when it has a tool changer. When set to 1, M06 will stop the program and display a message requesting the operator to change tools manually.

7 **RESET STOPS PAL CHG -** Enables the Reset button to stop a pallet change. It is intended for use with the future hard-coded pallet changer macro program. It should be set to zero.

8 **MINI POWER SUPPLY -** When Parameter 315, bit 8, Mini Mill is set to 1, the Over Voltage discrete input will be displayed as P.S. Fault. When it is set to 1:

(a) DC BUSS voltage displayed on the diagnostics screen for a vector drive machine is not displayed.

(b) Conditions that would normally generate Alarm 119, Over Voltage and Alarm 160, Low Voltage will instead generate Alarm 292, 320V Power Supply Fault. This alarm will be added to the alarm history only after a 1 second delay, to prevent false 292 alarms being added to the alarm history at the moment power is turned off. This parameter bit must be set to 1 on all Mini Mills.

9 **DOOR OPEN SWITCH -** Allows the software to work with an optional door-open switch. This bit should be set to 1 on machines fitted with the second door switch. If this bit is set to 1, the control will look for a second door switch when the door is opened automatically to the fully open position. If the switch is not found, Alarm 238, Door Fault will be generated. If this bit is set to zero, the control behaves as before.

10 **PALLET HARDCODE -** Supports the hard-coded APC pallet changer function. It must be set to 1 when an APC is present that is wired for two APC door switches. On all other machines, it must be set to 0.

11 **M50 CLOSES DOOR -** The MDC-1 pallet changer station auto door closes before an M50 pallet rotate and opens afterward, provided this parameter bit is set to 1. If the bit is set to zero, a flashing message directing the operator to close the pallet changer door (manually or by pushing the Part Ready button) will be displayed and the pallet change will not occur until the door is closed. Note that the door will not close automatically if the Pallet Schedule Table is used to schedule a pallet.

12 **MANUAL JOG TRM/TRL -** Enables the manual jog feature for the Tool Room Mill's handwheels.

13 **SAFTY SWITCH -** When set to zero, the control behaves as normal. When it is set to 1, the Toolroom Mill's safety switch must be pressed by the operator for controlled motion to start or continue.

14 **FOURTH AXIS -** Prevents unauthorized use of the 4th (A) axis. It can only be set to 1 with an unlock code. When it is set to zero, it prevents the user from altering Setting 30 and prevents the user from zeroing Parameter 43, Disabled bit. When this parameter bit is changed to zero, Setting 30 will be returned to Off and Parameter 43, Disabled bit will be set to 1.

15 **FIFTH AXIS -** Prevents unauthorized use of the 5th (B) axis. It can only be set to 1 with an unlock code. When set to zero, it prevents the user from altering Setting 78 and from zeroing the Parameter 151, Disabled bit. When this parameter bit is changed to zero, Setting 78 will be returned to Off and the Parameter 151, Disabled bit will be set to 1. Note that when Parameter 209, Horizontal is set to 1, Setting 78 is unavailable and not displayed because the B-axis is used for the tool changer.

16 **TOOL CAGE DOOR -** Supports the machines fitted with the side-mount tool changer cage door.

17 **VIBRATION SENSOR -** Enables the vibration sensor. When it is set to 1, the output from the sensor will be converted to Gs and displayed on the Current Commands Tool Load screen. When this parameter is set to zero, No Sensor will be displayed instead.

18 **HIGH Z TOOL CHANGER -** Setting this parameter to 1 and commanding either a G28 move of all the axes, or pressing Second Home causes the Z-axis to move to the maximum position prior to moving to machine zero. When set to zero, the Z-axis moves directly to machine zero. Previously, the Z-axis moved directly to machine zero regardless of this parameter bit. This enhancement was made primarily for the Gantry Router mills.

19 **PAL LOAD AUTODOOR -** Tells control pallet changer has automatic door, as opposed to operator Auto Door.

20 **MAP 4TH AXIS -** Enables the Rotary Index button at the load station and prevents movement of the rotary outside of the work area (i.e., rotary mounted on the outside pallet position).

21 **INV PAL DOOR SWITCH -** Must be set to 1 on the MDC1 and zero on all other machines. This bit indicates the polarity of the pallet changer door closed switch.

22 **PAL RECEIVER SWITCH -** Supports the APC pallet receiver position switch. When the switch is present, the bit must be set to 1; otherwise, it must be set to zero.

23 **RAPID HS FEED -** Enables straight line rapid moves. Normally, during a rapid move of two or more axes, the axis with the shorter distance will finish first. When this parameter is set to 1, the control will treat rapid moves as high-speed feeds, and all axes will complete their motion at the same time.

25 **POWER DICONN RELAY -** When set to zero, the machine behaves as before. When set to 1, Parameter 57, Safety Circ is set to 1, and the door is opened, I Gain on all axes will be cleared. With the door closed and power to the servos restored, the I Gain values will be restored. This is intended for use in conjunction with special hardware by customers who require the servo power to be cut when the door is opened.

26 **STATUS RELAYS -** Supports Machine Data Collection. The default value for all machines is zero.

27 **UNUSED**

28 **ADVANCED TOOL MGMT. -** Allows the user to specify groups of tools. When the life of a tool (based on feed time, total time, usage, number of holes, tool load, or vibration) has expired, the control will automatically use another tool from the same group. When all the tools from a group are used up, the control will alarm.

29 **RND5 TRM/TRL -** This parameter is intended for tool room machines. When it is zero, the machine behaves as before. When set to 1, all X and Z position displays are rounded to .0005. This does not affect programming.

30 **RND5 HANDWHEEL -** This parameter is intended for tool room machines. When zero, the machine behaves as before. When set to 1, and the user is jogging an axis using the manual handle-wheels, the position displays will be rounded to .0005. This will not affect the operation of the standard jog handle or programming.

31 **INTUITIVE PROG SYS -** When set to 1, the Intuitive Programming System is activated.

## 316 (L) MEASURE BAR RATE

Supports the Haas Servo Bar 300 bar feeder. It is the rate at which the bars are measured. Units are inches*1000.

## 316 (M) APC PAL. CLAMP TIME

Time required to clamp the APC pallet to the receiver. Units are milliseconds.

## 317 (L) MEASURE BAR INC

Supports Haas Servo Bar 300 bar feeder. This is increment used for bar measurement. Units are inches*10,000

## 317 (M) APC UNCLAMP TIME

Time required to unclamp the APC pallet from the receiver. Units are milliseconds.

**318 (L) GEAR MOTOR TIMEOUT**
Supports Haas Servo Bar 300 bar feeder. This is timeout value for gearmotor operations. Units are in milliseconds.

**318 (M) APC PAL. CHAIN TIME**
Time required to cycle the chain. It should be set to 8000. Units are milliseconds.

**319 (L) MAX RETRACT POS**
Supports Haas Servo Bar 300 bar feeder. This is maximum V axis retracted position. Units are inches * 10000.

**319 (M) APC DOOR CLOSE TIME**
Time required to close the door. It should be set to 6000. Units are milliseconds.

**320 (L) MIN RETRACT DIST**
Supports Haas Servo Bar 300 bar feeder. This is the minimum space between bar and push rod when retracted. Units are inches*10,000

**320 (M) RP DRAWBAR DOWN**
Time required for the drawbar to move down. Units are milliseconds.

**321 (L) PUSH ROD ZERO POS**
Supports the Haas Servo Bar 300 bar feeder. This is the V axis position for loading and unloading a bar. Units are in inches*10,000.

**321 (M) RP DRAWBAR UP TIME**
Time required for the drawbar to move up. Units are milliseconds.

**322 (L) GEARMOTOR BUMP TIME**
Supports Haas Servo Bar 300 bar feeder. Gear motor run time for bump and internal functions. Units are in milliseconds.

**322 (M) TOOL CLEAN 1 ON**
Tool arm angle to start air blast Units are degrees x 1000.

**323 (L) PUSH RATE**
Supports the Haas Servo Bar 300 bar feeder. This is the rate at which the last 1/4 inch of feed is done. Units are inches per minute*1000.

**323 (M) TOOL CLEAN 1 OFF**
Tool arm angle to start air blast Units are degrees x 1000.

**324 (L) GEAR MOTOR SETTLE**
Supports the Haas Servo Bar 300 bar feeder. This is the minimum dwell time for reversing the gear motor direction. Units are in milliseconds.

**325 (L) STANDARD BAR LEN**
Supports Haas Servo Bar 300 bar feeder. This is length of bar for G105 Q5. Units are in inches per minute*1000.

**326 (L) G5 DECELERATION**
Supports the G05 Fine Spindle Ctrl feature. This is the rate at which to decelerate the spindle during G5. Units are in encoder steps per second. It should be set to 15000.

**327 X SCALES PER INCH**
Used on machines equipped with linear scales.

**328 Y SCALES PER INCH**
Used on machines equipped with linear scales.

**329 Z SCALES PER INCH**
Used on machines equipped with linear scales.

**330 A SCALES PER INCH**
Used on machines equipped with linear scales.

**331 B SCALES PER INCH**
Used on machines equipped with linear scales.

**333 X SCALES PER REV**
Used on machines equipped with linear scales.

**334 Y SCALES PER REV**
Used on machines equipped with linear scales.

**335 Z SCALES PER REV**
Used on machines equipped with linear scales.

**336 A SCALES PER REV**
Used on machines equipped with linear scales.

**337 B SCALES PER REV**
Used on machines equipped with linear scales.

**339 X SPINDLE THERM COEF.**
Supports Spindle Head Thermal Compensation feature.

**340 Y SPINDLE THERM COEF.**
See Parameter 339 for description.

**341 Z SPINDLE THERM COEF.**
See Parameter 339 for description.

**342 A SPINDLE THERM COEF.**
See Parameter 339 for description.

**343 B SPINDLE THERM COEF.**
See Parameter 339 for description.

**345 X SPINDLE THERM T.C.**
Supports Spindle Head Thermal Compensation feature.

**346 Y SPINDLE THERM T.C.**
See Parameter 345 for description.

**347 Z SPINDLE THERM T.C.**
See Parameter 345 for description.

**348 A SPINDLE THERM T.C.**
See Parameter 345 for description.

**349 B SPINDLE THERM T.C.**
See Parameter 345 for description.

**351 THRML SENSOR OFFSET**
Used for Ballscrew Thermal Compensation via a temperature sensor attached to the ball nut.

**352 RELAY BANK SELECT**
Allows the user to change which bank of relays is to be used (Parameter 209, bit 23, MCD RLY BRD assumes that relay bank one is to be used). It may be set to a number from 0 to 3 (inclusive). M codes M21 through M28 will be switched to the selected bank. This parameter requires a revision “S” I/O board. If a previous board is installed (without the additional banks of relays), this parameter should be set to zero.

| Bank # | Relay Location | Description |
|---|---|---|
| 0 | I/O PCB | Internal machine functions. |
| 1 | I/O PCB | User relay outputs (some may be used for internal functions). |
| 2 | 1st M-code PCB | 8M option. 8 additional user outputs. |
| 3 | 2nd M-code PCB | Typically used for built in options such as, side-mount tool changer, etc. |

## 353 (L) MAX SUBSPINDLE rpm
Maximum rpm available to the subspindle, and works in conjunction with parameters 570 and 571.

## 354 (L) U SWITCH A
See Parameter 1 for description.

## 371 U ACC/DEC T CONST
Exponential acceleration time constant. Units are 1/10000 seconds. This parameter provides for a constant ratio between profiling lag and servo velocity at the endpoint of a rapid motion. It is also the ratio between velocity and acceleration.

## 372 U PHASE OFFSET
The motor phase offset for U motor. Constant value, the value has no units.

## 373 U PHASE OFFSET
Shifts the effective position of the encoder Z pulse. It can correct for a motor or home switch positioning error.

## 374 U EXACT STOP DIST.
This parameter controls how close the axis must be to its end point when exact stop is programmed. They apply in G09 and G64.They are in units of encoder steps. A value of 34 would give **34/138718 = 0.00025 inch. To change the value of this parameter permanently, the machine must be rebooted.**

## 375 U FRICTION COMPENSAT
Compensate for friction on the axis. The units are in 0.004V.

## 376 U ACCEL FEED FORWARD
Set the feed forward gain for the axis servo. Constant value, it has no units.

## 377 U SCREW COMP. COEF.
Coefficient of heating of the ballscrew, and is used to decrease or shorten the screw length.

## 378 U AIR BRAKE DELAY
Delay provided for air to release from the brake prior to moving. Units are milliseconds.

## 379 (M) U TOOL CHANGE OFFSET
Offset distance from operator door closed switch to the desired closed position (units are encoder steps). This is always a positive number.

## 382 (L) U SWITCH B
See Parameter 266 for description.

- **6** **U DELAY AXIS 0** - When set, indicates that this axis should be zeroed in Phase II of the zeroing process rather than the default, Phase I.
- **11** **U REVERSE DIR** - Reverse direction of power to motor.
- **12** **U AMP DECODE** - Governs how amplifier alarms are generated. A 0 indicates an old model amplifier and 1 indicates a smart amplifier.

## 384 (L) U SCALE GAIN MULT
See Parameter 279 for description.

## 386 V SCALES PER INCH
Used on machines equipped with linear scales.

## 390 V SWITCH A
Parameter 1 is a collection of single-bit flags used to turn servo related functions on and off. The left and right cursor arrows are used to select the function being changed. All values are 0 or 1 only. The function names are:

- **0** **REV ENCODER -** Reverses the direction of encoder data.
- **1** **REV POWER -** Reverses the direction of power to motor.
- **2** **REV PHASING -** Reverses motor phasing.
- **3** **DISABLED -** Disables the X-axis.
- **4** **Z CH ONLY -** With **A** only, indicates no home switch.

5 **AIR BRAKE -** With **A** only, indicates air brake is used.

6 **DISABLE Z T -** Disables encoder **Z** test (for testing only).

7 **SERVO HIST -** Graph of servo error (for diagnostics only).

8 **INV HOME SW -** Inverted home switch (NC switch).

9 **INV Z CH -** Inverted **Z** channel (normally high).

10 **CIRC. WRAP. (L) -** When Parameter 498 bit 10, is set to 1, the lathe automatically unwinds the C-axis no more than half a rotation. When the bit is set to zero, it behaves as if the C-axis had been rotated many times and disengaged. When it is engaged again, the control zeroes it by unwinding as many times as it was wound.

10 **CIRC. WRAP. (M) -** With **A** only, causes 360 wrap to return to 0.

11 **NO I IN BRAK -** With **A** only, removes **I** feedback when brake is active.

12 **LOW PASS +1X -** Adds 1 term to low pass filter.

13 **LOW PASS +2X -** Adds two terms to low pass filter.

14 **OVER TEMP NC -** Selects a normally closed overheat sensor in motor.

15 **CABLE TEST -** Enables test of encoder signals and cabling.

16 **Z TEST HIST -** History plot of Z channel test data.

17 **SCALE FACT/X -** If set to 1, the scale ratio is interpreted as divided by X; where X depends on bits **SCALE/X LO** and **SCALE/X HI.**

18 **INVIS AXIS -** Creates an invisible axis.

19 **(L) DIAMETER PRG -** Sets diameter programming. When set to 1, it interprets inputs as diameter instead of radii.

19 **(M) ALM ON LM SW -** Rotary alarms at the limit switch.

20 **(L) TRAVL LIMITS -** Travel limits are used.

20 **(M) CK TRAVL LIM A -** Rotary travel limits are used. On mills with the Gimbaled Spindle (used on the VR series mills), A and B axes **CK TRAVL LIM** must be set to 1.

21 **(L) NO LIMSW ALM -** Alarms are not generated at the limit switches.

21 **(M) ROT TRVL LIM -** Rotary travel limits are used.

22 **D FILTER X8 -** Enables 8 tap FIR filter on the derivative component of the servo loop. Used to eliminate high frequency vibrations (depending on axis motor).

23 **D FILTER X4 -** Enables 4-tap FIR filter on the derivative component of the servo loop. Used to eliminate high frequency vibrations (depending on axis motor).

24 **TORQUE ONLY -** For Haas diagnostic use only.

25 **3 EREV/MREV -** The **2 EREV/MREV** and **3 EREV/MREV** bits have two definitions, depending on whether one or two encoders are present. For single encoder systems, the bits are used to define the ratio between the electrical rotation of the spindle motor and the mechanical rotation of the motor. For two encoder systems, the definition is the electrical rotation of the motor to the mechanical rotation of the spindle motor encoder, which includes any pulley ratio between the motor and the motor encoder.

26 **2 EREV/MREV -** The **2 EREV/MREV** and **3 EREV/MREV** bits have two definitions, depending on whether one or two encoders are present. For single encoder systems, the bits are used to define the ratio between the electrical rotation of the spindle motor and the mechanical rotation of the motor. For two encoder systems, the definition is the electrical rotation of the motor to the mechanical rotation of the spindle motor encoder, which includes any pulley ratio between the motor and the motor encoder.

27 **NON MUX PHAS -** For Haas diagnostic use only.

28 **BRUSH MOTOR -** Enables the brushless motor option.

29 **(L) ROTARY AXIS -** When set to 1, the axis is treated as a rotary axis. Position will be displayed in degrees, and inputs will be interpreted as angles.

29 **(M) LINEAR DISPL -** Changes the display from degrees to inches (or millimeters) on the A and B axes.

30 **SCALE/X LO -** With **SCALE/X HI** bit, determines the scale factor used in bit **SCALE FACT/X**.

31 **SCALE/X HI -** With **SCALE/X LO** bit, determines the scale factor used in bit **SCALE FACT/X**. See below:

| HI | LO | |
|---|---|---|
| 0 | 0 | 3 |
| 0 | 1 | 5 |
| 1 | 0 | 7 |
| 1 | 1 | 9 |

**391 V P GAIN**
Proportional gain in servo loop.

**392 V D GAIN**
Derivative gain in servo loop.

**393 V I GAIN**
Integral gain in servo loop.

**394 X RATIO (Steps/Unit)**
Number of steps of encoder per unit of travel. Encoder steps supply four (4) times their line count per revolution. Thus, an 8192 line encoder and 6mm pitch screw give: **8192 x 4 x 25.4 / 6 = 138718** (5 steps per unit inch/mm ratio).

**395 V MAX TRAVEL (Steps)**
Maximum negative direction of travel from machine zero in encoder steps. Does not apply to A-axis. A 20-inch travel, 8192 line encoder and 6 mm pitch screw give: **20.0 x 138718 = 2774360**.

**396 V ACCELERATION**
Maximum acceleration of axis in steps per second per second.

**397 V MAX SPEED**
Maximum speed for this axis in steps per second.

**398 V MAX ERROR**
Maximum error allowed in servo loop before alarm is generated. Units are encoder steps. This is the maximum allowable error in Hz between commanded speed and actual speed. The purpose of this parameter is to prevent “motor runaway” in case of phasing reversal or bad parameters.

**399 V FUSE LEVEL**
Limits average power to motor. If not set correctly, this parameter can cause an “overload” alarm.

**400 V BACK EMF**
Back EMF of motor in volts per 1000 rpm times 10. Thus a 63 volt/Krpm motor gives 630.

**401 V STEPS/REVOLUTION**
Encoder steps per revolution of motor. An 8192 line encoder gives: **8192 x 4 = 32768**

**402 V BACKLASH**
Backlash correction in encoder steps.

**403 V DEAD ZONE**
Dead zone correction for driver electronics. Units are 0.0000001 seconds.

**404 V IN POSITION LIMIT**
How close the motor must be to the endpoint before any move is considered complete when not in exact stop (G09 or G61). Units are encoder steps. As of mill version 9.06, this parameter does not apply to feeds. This parameter should be equivalent to .050 inches.

**405 V MAX CURRENT**
Fuse level in % of max power to motor. Applies only when motor is stopped.

Corresponds to maximum peak current provided by the amplifier. 4095 = 30A (small amp), 45A (Medium amp), or 60A (large amp).

**406 V D*D GAIN**
Second derivative gain in servo loop.

**407 V ACC/DEC T CONST**
Exponential acceleration time constant. Units are 1/10000 seconds. This parameter provides for a constant ratio between profiling lag and servo velocity at the endpoint of a rapid motion. It is also the ratio between velocity and acceleration.

## 408 V PHASE OFFSET

The motor phase offset for V motor. Constant value, the value has no units.

## 409 V PHASE OFFSET

Shifts the effective position of the encoder Z pulse. It can correct for a motor or home switch positioning error.

## 410 V EXACT STOP DIST.

This parameter controls how close the axis must be to its end point when exact stop is programmed. They apply in G09 and G64.They are in units of encoder steps. A value of 34 would give **34/138718 = 0.00025 inch. To change the value of this parameter permanently, the machine must be rebooted.**

## 411 V FRICTION COMPENSAT

Compensate for friction on the axis. The units are in 0.004V.

## 412 V ACCEL FEED FORWARD

Set the feed forward gain for the axis servo. Constant value, it has no units.

## 413 V SCREW COMP. COEF.

Coefficient of heating of the ballscrew, and is used to decrease or shorten the screw length.

## 414 V AIR BRAKE DELAY

Delay provided for air to release from the brake prior to moving. Units are milliseconds.

## 415 V TOOL CHANGE OFFSET

## 416 V LEAD COMP 10E9

## 418 V SWITCH B

Parameter 4182 is a collection of single-bit flags used to turn servo related functions on and off. The left and right cursor arrows are used to select the function being changed. All values are 0 or 1 only. The function names are:

- **0** **A LIN SCALE EN** - Enables linear scales for the A-axis.
- **1** **A INVRT LN SCL** - Inverts the A-axis linear scale.
- **2** **UNUSED** - Unused
- **3** **TH SNSR COMP** - Used for Ballscrew Thermal Compensation via a temperature sensor attached to the ball nut. When this bit is set to 1, the feature is activated for that axis. Note that the feature can only be used when temperature sensors are installed.
- **4** **A 2ND HOME BTN** - Moves the axis to coordinate specified in Work Ofset G129
- **5** **A NEG COMP DIR** - Negates the direction of thermal compensation
- **6** **A DELAY AXIS 0** - When set, indicates that this axis should be zeroed in Phase II of the zeroing process rather than the default, Phase I.
- **7** **MAX TRAV INP**
- **8** **NO ZERO/NOHOME** - Intended for lathes that have extra tools mounted on the outside of the turret. If this bit is set to zero, it will have no effect. If it is set to 1, the associated axis will not move when Power Up/Restart, Home G28 or Auto All Axes is pressed. The reason for this feature is to help prevent collisions between tools mounted on the outside of the turret and a sub-spindle mounted on the tailstock. It is important to note that a single axis Home G28 (e.g., press Z then Home G28) and any G28 specified in a program will still cause the axis to move regardless of the value of this parameter bit. Exercise care when commanding any axis move.
- **11** **A REVERSE DIR** - Reverse direction of power to motor.
- **12** **Z AMP DECODE** - Governs how amplifier alarms are generated. A 0 indicates an old model amplifier and 1 indicates a smart amplifier.

## 419 V SCREW COMP T. CONST

## 420 V SCALE GAIN MULT

Used on machines with linear scales. Linear scales are used to continuously correct any errors in encoder position. The parameter determines the gain of the correction factor; that is, how fast it corrects, and should be set to 40.

## 421 V LINEAR SCREW OFFS

Used on machines with linear scales. This parameter accounts for the unused portion of the ballscrew between zero and the actual motor.

## 422 V SCALES PER INCH

Used on machines equipped with linear scales.

## 423 V SCALES PER REV

Used on machines equipped with linear scales.

## 424 V SPINDLE THERM COEF.

Supports Spindle Head Thermal Compensation feature.

## 426 W SWITCH A

Parameter 1 is a collection of single-bit flags used to turn servo related functions on and off. The left and right cursor arrows are used to select the function being changed. All values are 0 or 1 only. The function names are:

0 **REV ENCODER -** Reverses the direction of encoder data.

1 **REV POWER -** Reverses the direction of power to motor.

2 **REV PHASING -** Reverses motor phasing.

3 **DISABLED -** Disables the X-axis.

4 **Z CH ONLY -** With **A** only, indicates no home switch.

5 **AIR BRAKE -** With **A** only, indicates air brake is used.

6 **DISABLE Z T -** Disables encoder **Z** test (for testing only).

7 **SERVO HIST -** Graph of servo error (for diagnostics only).

8 **INV HOME SW -** Inverted home switch (NC switch).

9 **INV Z CH -** Inverted **Z** channel (normally high).

10 **CIRC. WRAP. (L) -** When Parameter 498 bit 10, is set to 1, the lathe automatically unwinds the C-axis no more than half a rotation. When the bit is set to zero, it behaves as if the C-axis had been rotated many times and disengaged. When it is engaged again, the control zeroes it by unwinding as many times as it was wound.

10 **CIRC. WRAP. (M) -** With **A** only, causes 360 wrap to return to 0.

11 **NO I IN BRAK -** With **A** only, removes **I** feedback when brake is active.

12 **LOW PASS +1X -** Adds 1 term to low pass filter.

13 **LOW PASS +2X -** Adds two terms to low pass filter.

14 **OVER TEMP NC -** Selects a normally closed overheat sensor in motor.

15 **CABLE TEST -** Enables test of encoder signals and cabling.

16 **Z TEST HIST -** History plot of Z channel test data.

17 **SCALE FACT/X -** If set to 1, the scale ratio is interpreted as divided by X; where X depends on bits **SCALE/X LO** and **SCALE/X HI.**

18 **INVIS AXIS -** Creates an invisible axis.

19 **(L) DIAMETER PRG -** Sets diameter programming. When set to 1, it interprets inputs as diameter instead of radii.

19 **(M) ALM ON LM SW -** Rotary alarms at the limit switch.

20 **(L) TRAVL LIMITS -** Travel limits are used.

20 **(M) CK TRAVL LIM A -** Rotary travel limits are used. On mills with the Gimbaled Spindle (used on the VR series mills), A and B axes **CK TRAVL LIM** must be set to 1.

21 **(L) NO LIMSW ALM -** Alarms are not generated at the limit switches.

21 **(M) ROT TRVL LIM -** Rotary travel limits are used.

22 **D FILTER X8 -** Enables 8 tap FIR filter on the derivative component of the servo loop. Used to eliminate high frequency vibrations (depending on axis motor).

23 **D FILTER X4 -** Enables 4-tap FIR filter on the derivative component of the servo loop. Used to eliminate high frequency vibrations (depending on axis motor).

24 **TORQUE ONLY -** For Haas diagnostic use only.

25 **3 EREV/MREV -** The **2 EREV/MREV** and **3 EREV/MREV** bits have two definitions, depending on whether one or two encoders are present. For single encoder systems, the bits are used to define the ratio between the electrical rotation of the spindle motor and the mechanical rotation of the motor. For two encoder systems, the definition is the electrical rotation of the motor to the mechanical rotation of the spindle motor encoder, which includes any pulley ratio between the motor and the motor encoder.

26 **2 EREV/MREV -** The **2 EREV/MREV** and **3 EREV/MREV** bits have two definitions, depending on whether one or two encoders are present. For single encoder systems, the bits are used to define the ratio between the electrical rotation of the spindle motor and the mechanical rotation of the motor. For two encoder systems, the definition is the electrical rotation of the motor to the mechanical rotation of the spindle motor encoder, which includes any pulley ratio between the motor and the motor encoder.

27 **NON MUX PHAS -** For Haas diagnostic use only.

28 **BRUSH MOTOR -** Enables the brushless motor option.

29 **(L) ROTARY AXIS -** When set to 1, the axis is treated as a rotary axis. Position will be displayed in degrees, and inputs will be interpreted as angles.

29 **(M) LINEAR DISPL -** Changes the display from degrees to inches (or millimeters) on the A and B axes.

30 **SCALE/X LO -** With **SCALE/X HI** bit, determines the scale factor used in bit **SCALE FACT/X**.

31 **SCALE/X HI -** With **SCALE/X LO** bit, determines the scale factor used in bit **SCALE FACT/X**. See below:

| HI | LO | |
|---|---|---|
| 0 | 0 | 3 |
| 0 | 1 | 5 |
| 1 | 0 | 7 |
| 1 | 1 | 9 |

## 427 W P GAIN

Proportional gain in servo loop.

## 428 W D GAIN

Derivative gain in servo loop.

## 429 W I GAIN

Integral gain in servo loop.

## 430 W RATIO (STEPS/UNIT)

Number of steps of encoder per unit of travel. Encoder steps supply four (4) times their line count per revolution. Thus, an 8192 line encoder and 6mm pitch screw give: **8192 x 4 x 25.4 / 6 = 138718** (5 steps per unit inch/mm ratio). For the EC-300 and MDC-1, this parameter is set to 57344 and controls the rotation of the pallet. When a pallet change is performed, pallet rotates 180 degrees. It is essential this parameter is checked after a software upgrade

## 431 W MAX TRAVEL (Steps)

Maximum negative direction of travel from machine zero in encoder steps. Does not apply to A-axis. A 20-inch travel, 8192 line encoder and 6 mm pitch screw give: **20.0 x 138718 = 2774360**.

## 432 W ACCELERATION

Maximum acceleration of axis in steps per second per second.

## 433 W MAX SPEED

Maximum speed for this axis in steps per second.

## 434 W MAX ERROR

Maximum error allowed in servo loop before alarm is generated. Units are encoder steps. This is the maximum allowable error in Hz between commanded speed and actual speed. The purpose of this parameter is to prevent “motor runaway” in case of phasing reversal or bad parameters.

## 435 W FUSE LEVEL

Limits average power to motor. If not set correctly, this parameter can cause an “overload” alarm.

## 436 W BACK EMF

Back EMF of motor in volts per 1000 rpm times 10. Thus a 63 volt/Krpm motor gives 630.

## 437 W STEPS/REVOLUTION

Encoder steps per revolution of motor. An 8192 line encoder gives: **8192 x 4 = 32768**

## 438 W BACKLASH

Backlash correction in encoder steps.

## 439 W DEAD ZONE

Dead zone correction for driver electronics. Units are 0.0000001 seconds.

## 440 W IN POSITION LIMIT

How close the motor must be to the endpoint before any move is considered complete when not in exact stop (G09 or G61). Units are encoder steps. As of mill version 9.06, this parameter does not apply to feeds. This parameter should be equivalent to .050 inches.

## 441 W MAX CURRENT

Fuse level in % of max power to motor. Applies only when motor is stopped.

Corresponds to maximum peak current provided by the amplifier. 4095 = 30A (small amp), 45A (Medium amp), or 60A (large amp).

## 442 W D*D GAIN

Second derivative gain in servo loop.

## 443 W ACC/DEC T CONST

Exponential acceleration time constant. Units are 1/10000 seconds. This parameter provides for a constant ratio between profiling lag and servo velocity at the endpoint of a rapid motion. It is also the ratio between velocity and acceleration.

## 444 W PHASE OFFSET

The motor phase offset for W motor. Constant value, the value has no units.

## 445 W GRID OFFSET

Shifts the effective position of the encoder Z pulse. It can correct for a motor or home switch positioning error.

## 446 W EXACT STOP DIST.

This parameter controls how close the axis must be to its end point when exact stop is programmed. They apply in G09 and G64.They are in units of encoder steps. A value of 34 would give **34/138718 = 0.00025 inch. To change the value of this parameter permanently, the machine must be rebooted.**

## 447 W FRICTION COMPENSAT

Compensate for friction on the axis. The units are in 0.004V.

## 448 W ACCEL FEED FORWARD

Set the feed forward gain for the axis servo. Constant value, it has no units.

## 449 W SCREW COMP. COEF.

Coefficient of heating of the ballscrew, and is used to decrease or shorten the screw length.

## 450 W AIR BRAKE DELAY

Delay provided for air to release from the brake prior to moving. Units are milliseconds.

## 451 W TOOL CHANGE OFFSET

## 452 W LEAD COMP 10E9

## 454 W SWITCH B

Parameter 454 is a collection of single-bit flags used to turn servo related functions on and off. The left and right cursor arrows are used to select the function being changed. All values are 0 or 1 only. The function names are:

- **0** **A LIN SCALE EN** - Enables linear scales for the A-axis.
- **1** **A INVRT LN SCL** - Inverts the A-axis linear scale.
- **2** **UNUSED** - Unused
- **3** **TH SNSR COMP** - Used for Ballscrew Thermal Compensation via a temperature sensor attached to the ball nut. When this bit is set to 1, the feature is activated for that axis. Note that the feature can only be used when temperature sensors are installed.
- **4** **A 2ND HOME BTN** - Moves the axis to coordinate specified in Work Ofset G129
- **5** **A NEG COMP DIR** - Negates the direction of thermal compensation
- **6** **A DELAY AXIS 0** - When set, indicates that this axis should be zeroed in Phase II of the zeroing process rather than the default, Phase I.

7 **MAX TRAV INP**

8 **NO ZERO/NOHOME** - Intended for lathes that have extra tools mounted on the outside of the turret. If this bit is set to zero, it will have no effect. If it is set to 1, the associated axis will not move when Power Up/Restart, Home G28 or Auto All Axes is pressed. The reason for this feature is to help prevent collisions between tools mounted on the outside of the turret and a sub-spindle mounted on the tailstock. It is important to note that a single axis Home G28 (e.g., press Z then Home G28) and any G28 specified in a program will still cause the axis to move regardless of the value of this parameter bit. Exercise care when commanding any axis move.

11 **A REVERSE DIR** - Reverse direction of power to motor.

12 **Z AMP DECODE** - Governs how amplifier alarms are generated. A 0 indicates an old model amplifier and 1 indicates a smart amplifier.

## 455 W SCREW COMP T. CONST

## 456 W SCALE GAIN MULT

Used on machines with linear scales. Linear scales are used to continuously correct any errors in encoder position. The parameter determines the gain of the correction factor; that is, how fast it corrects, and should be set to 40.

## 457 W LINEAR SCREW OFFS

Used on machines with linear scales. This parameter accounts for the unused portion of the ballscrew between zero and the actual motor.

## 458 W SCALES PER INCH

Used on machines equipped with linear scales.

## 459 W SCALES PER REV

Used on machines equipped with linear scales.

## 460 W SPINDLE THERM COEF.

Supports Spindle Head Thermal Compensation feature.

## 462 Tt SWITCH A

Parameter 1 is a collection of single-bit flags used to turn servo related functions on and off. The left and right cursor arrows are used to select the function being changed. All values are 0 or 1 only. The function names are:

0 **REV ENCODER -** Reverses the direction of encoder data.

1 **REV POWER -** Reverses the direction of power to motor.

2 **REV PHASING -** Reverses motor phasing.

3 **DISABLED -** Disables the X-axis.

4 **Z CH ONLY -** With **A** only, indicates no home switch.

5 **AIR BRAKE -** With **A** only, indicates air brake is used.

6 **DISABLE Z T -** Disables encoder **Z** test (for testing only).

7 **SERVO HIST -** Graph of servo error (for diagnostics only).

8 **INV HOME SW -** Inverted home switch (NC switch).

9 **INV Z CH -** Inverted **Z** channel (normally high).

10 **CIRC. WRAP. (L) -** When Parameter 498 bit 10, is set to 1, the lathe automatically unwinds the C-axis no more than half a rotation. When the bit is set to zero, it behaves as if the C-axis had been rotated many times and disengaged. When it is engaged again, the control zeroes it by unwinding as many times as it was wound.

10 **CIRC. WRAP. (M) -** With **A** only, causes 360 wrap to return to 0.

11 **NO I IN BRAK -** With **A** only, removes **I** feedback when brake is active.

12 **LOW PASS +1X -** Adds 1 term to low pass filter.

13 **LOW PASS +2X -** Adds two terms to low pass filter.

14 **OVER TEMP NC -** Selects a normally closed overheat sensor in motor.

15 **CABLE TEST -** Enables test of encoder signals and cabling.

16 **Z TEST HIST -** History plot of Z channel test data.

17 **SCALE FACT/X -** If set to 1, the scale ratio is interpreted as divided by X; where X depends on bits **SCALE/X LO** and **SCALE/X HI.**

18 **INVIS AXIS -** Creates an invisible axis.

19 **(L) DIAMETER PRG -** Sets diameter programming. When set to 1, it interprets inputs as diameter instead of radii.

19 **(M) ALM ON LM SW -** Rotary alarms at the limit switch.

**20 (L) TRAVL LIMITS -** Travel limits are used.

**20 (M) CK TRAVL LIM A -** Rotary travel limits are used. On mills with the Gimbaled Spindle (used on the VR series mills), A and B axes **CK TRAVL LIM** must be set to 1.

**21 (L) NO LIMSW ALM -** Alarms are not generated at the limit switches.

**21 (M) ROT TRVL LIM -** Rotary travel limits are used.

**22 D FILTER X8 -** Enables 8 tap FIR filter on the derivative component of the servo loop. Used to eliminate high frequency vibrations (depending on axis motor).

**23 D FILTER X4 -** Enables 4-tap FIR filter on the derivative component of the servo loop. Used to eliminate high frequency vibrations (depending on axis motor).

**24 TORQUE ONLY -** For Haas diagnostic use only.

**25 3 EREV/MREV -** The **2 EREV/MREV** and **3 EREV/MREV** bits have two definitions, depending on whether one or two encoders are present. For single encoder systems, the bits are used to define the ratio between the electrical rotation of the spindle motor and the mechanical rotation of the motor. For two encoder systems, the definition is the electrical rotation of the motor to the mechanical rotation of the spindle motor encoder, which includes any pulley ratio between the motor and the motor encoder.

**26 2 EREV/MREV -** The **2 EREV/MREV** and **3 EREV/MREV** bits have two definitions, depending on whether one or two encoders are present. For single encoder systems, the bits are used to define the ratio between the electrical rotation of the spindle motor and the mechanical rotation of the motor. For two encoder systems, the definition is the electrical rotation of the motor to the mechanical rotation of the spindle motor encoder, which includes any pulley ratio between the motor and the motor encoder.

**27 NON MUX PHAS -** For Haas diagnostic use only.

**28 BRUSH MOTOR -** Enables the brushless motor option.

**29 (L) ROTARY AXIS -** When set to 1, the axis is treated as a rotary axis. Position will be displayed in degrees, and inputs will be interpreted as angles.

**29 (M) LINEAR DISPL -** Changes the display from degrees to inches (or millimeters) on the A and B axes.

**30 SCALE/X LO -** With **SCALE/X HI** bit, determines the scale factor used in bit **SCALE FACT/X**.

**31 SCALE/X HI -** With **SCALE/X LO** bit, determines the scale factor used in bit **SCALE FACT/X**. See below:

| HI | LO | |
|---|---|---|
| 0 | 0 | 3 |
| 0 | 1 | 5 |
| 1 | 0 | 7 |
| 1 | 1 | 9 |

## 463 Tt P GAIN

Proportional gain in servo loop.

## 464 Tt D GAIN

Derivative gain in servo loop.

## 465 Tt I GAIN

Integral gain in servo loop.

## 466 Tt RATIO (Steps/Unit)

Number of steps of encoder per unit of travel. Encoder steps supply four (4) times their line count per revolution. Thus, an 8192 line encoder and 6mm pitch screw give: **8192 x 4 x 25.4 / 6 = 138718** (5 steps per unit inch/mm ratio).

## 467 Tt MAX TRAVEL (Steps)

Maximum negative direction of travel from machine zero in encoder steps. Does not apply to A-axis. A 20-inch travel, 8192 line encoder and 6 mm pitch screw give: **20.0 x 138718 = 2774360**.

## 468 Tt ACCELERATION

Maximum acceleration of axis in steps per second per second.

## 469 Tt MAX SPEED

Maximum speed for this axis in steps per second.

## 470 Tt MAX ERROR

Maximum error allowed in servo loop before alarm is generated. Units are encoder steps. This is the maximum

allowable error in Hz between commanded speed and actual speed. The purpose of this parameter is to prevent “motor runaway” in case of phasing reversal or bad parameters.

### 471 Tt FUSE LEVEL
Limits average power to motor. If not set correctly, this parameter can cause an “overload” alarm.

### 472 Tt BACK EMF
Back EMF of motor in volts per 1000 rpm times 10. Thus a 63 volt/Krpm motor gives 630.

### 473 Tt STEPS/REVOLUTION
Encoder steps per revolution of motor. An 8192 line encoder gives: **8192 x 4 = 32768**

### 474 Tt BACKLASH
Backlash correction in encoder steps.

### 475 Tt DEAD ZONE
Dead zone correction for driver electronics. Units are 0.0000001 seconds.

### 476 Tt IN POSITION LIMIT
How close the motor must be to the endpoint before any move is considered complete when not in exact stop (G09 or G61). Units are encoder steps. As of mill version 9.06, this parameter does not apply to feeds. This parameter should be equivalent to .050 inches.

### 477 Tt MAX CURRENT
Fuse level in % of max power to motor. Applies only when motor is stopped.

Corresponds to maximum peak current provided by the amplifier. 4095 = 30A (small amp), 45A (Medium amp), or 60A (large amp).

### 478 Tt D*D GAIN
Second derivative gain in servo loop.

### 479 Tt ACC/DEC T CONST
Exponential acceleration time constant. Units are 1/10000 seconds. This parameter provides for a constant ratio between profiling lag and servo velocity at the endpoint of a rapid motion. It is also the ratio between velocity and acceleration.

### 480 Tt PHASE OFFSET
The motor phase offset for Tt motor. Constant value, the value has no units.

### 481 Tt GRID OFFSET
Shifts the effective position of the encoder Z pulse. It can correct for a motor or home switch positioning error.

### 482 Tt EXACT STOP DIST.
This parameter controls how close the axis must be to its end point when exact stop is programmed. They apply in G09 and G64.They are in units of encoder steps. A value of 34 would give **34/138718 = 0.00025 inch. To change the value of this parameter permanently, the machine must be rebooted.**

### 483 Tt FRICTION COMPENSAT
Compensate for friction on the axis. The units are in 0.004V.

### 484 Tt ACCEL FEED FORWARD
Set the feed forward gain for the axis servo. Constant value, it has no units.

### 485 Tt SCREW COMP. COEF.
Coefficient of heating of the ballscrew, and is used to decrease or shorten the screw length.

### 486 Tt AIR BRAKE DELAY
Delay provided for air to release from the brake prior to moving. Units are milliseconds.

## 487 Tt TOOL CHANGE OFFSET

## 488 Tt LEAD COMP 10E9

## 490 Tt SWITCH B

Parameter 562 is a collection of single-bit flags used to turn servo related functions on and off. The left and right cursor arrows are used to select the function being changed. All values are 0 or 1 only. The function names are:

- **0** **A LIN SCALE EN** - Enables linear scales for the A-axis.
- **1** **A INVRT LN SCL** - Inverts the A-axis linear scale.
- **2** **UNUSED** - Unused
- **3** **TH SNSR COMP** - Used for Ballscrew Thermal Compensation via a temperature sensor attached to the ball nut. When this bit is set to 1, the feature is activated for that axis. Note that the feature can only be used when temperature sensors are installed.
- **4** **A 2ND HOME BTN** - Moves the axis to coordinate specified in Work Ofset G129
- **5** **A NEG COMP DIR** - Negates the direction of thermal compensation
- **6** **A DELAY AXIS 0** - When set, indicates that this axis should be zeroed in Phase II of the zeroing process rather than the default, Phase I.
- **7** **MAX TRAV INP**
- **8** **NO ZERO/NOHOME** - Intended for lathes that have extra tools mounted on the outside of the turret. If this bit is set to zero, it will have no effect. If it is set to 1, the associated axis will not move when Power Up/Restart, Home G28 or Auto All Axes is pressed. The reason for this feature is to help prevent collisions between tools mounted on the outside of the turret and a sub-spindle mounted on the tailstock. It is important to note that a single axis Home G28 (e.g., press Z then Home G28) and any G28 specified in a program will still cause the axis to move regardless of the value of this parameter bit. Exercise care when commanding any axis move.
- **11** **A REVERSE DIR** - Reverse direction of power to motor.
- **12** **Z AMP DECODE** - Governs how amplifier alarms are generated. A 0 indicates an old model amplifier and 1 indicates a smart amplifier.

## 491 Tt SCREW COMP T. CONST

## 492 Tt SCALE GAIN MULT

Used on machines with linear scales. Linear scales are used to continuously correct any errors in encoder position. The parameter determines the gain of the correction factor; that is, how fast it corrects, and should be set to 40.

## 493 Tt LINEAR SCREW OFFS

Used on machines with linear scales. This parameter accounts for the unused portion of the ballscrew between zero and the actual motor.

## 494 Tt SCALES PER INCH

Used on machines equipped with linear scales.

## 495 Tt SCALES PER REV

Used on machines equipped with linear scales.

## 496 Tt SPINDLE THERM COEF.

Supports Spindle Head Thermal Compensation feature.

## 497 Tt SPINDLE THERM T.C.

Not Used.

## 498 C SWITCH A

Parameter 1 is a collection of single-bit flags used to turn servo related functions on and off. The left and right cursor arrows are used to select the function being changed. All values are 0 or 1 only. The function names are:

- **0** **REV ENCODER -** Reverses the direction of encoder data.
- **1** **REV POWER -** Reverses the direction of power to motor.
- **2** **REV PHASING -** Reverses motor phasing.
- **3** **DISABLED -** Disables the X-axis.
- **4** **Z CH ONLY -** With **A** only, indicates no home switch.
- **5** **AIR BRAKE -** With **A** only, indicates air brake is used.

6 **DISABLE Z T -** Disables encoder **Z** test (for testing only).

7 **SERVO HIST -** Graph of servo error (for diagnostics only).

8 **INV HOME SW -** Inverted home switch (NC switch).

9 **INV Z CH -** Inverted **Z** channel (normally high).

10 **CIRC. WRAP. (L) -** When Parameter 498 bit 10, is set to 1, the lathe automatically unwinds the C-axis no more than half a rotation. When the bit is set to zero, it behaves as if the C-axis had been rotated many times and disengaged. When it is engaged again, the control zeroes it by unwinding as many times as it was wound.

10 **CIRC. WRAP. (M) -** With **A** only, causes 360 wrap to return to 0.

11 **NO I IN BRAK -** With **A** only, removes **I** feedback when brake is active.

12 **LOW PASS +1X -** Adds 1 term to low pass filter.

13 **LOW PASS +2X -** Adds two terms to low pass filter.

14 **OVER TEMP NC -** Selects a normally closed overheat sensor in motor.

15 **CABLE TEST -** Enables test of encoder signals and cabling.

16 **Z TEST HIST -** History plot of Z channel test data.

17 **SCALE FACT/X -** If set to 1, the scale ratio is interpreted as divided by X; where X depends on bits **SCALE/X LO** and **SCALE/X HI.**

18 **INVIS AXIS -** Creates an invisible axis.

19 **(L) DIAMETER PRG -** Sets diameter programming. When set to 1, it interprets inputs as diameter instead of radii.

19 **(M) ALM ON LM SW -** Rotary alarms at the limit switch.

20 **(L) TRAVL LIMITS -** Travel limits are used.

20 **(M) CK TRAVL LIM A -** Rotary travel limits are used. On mills with the Gimbaled Spindle (used on the VR series mills), A and B axes **CK TRAVL LIM** must be set to 1.

21 **(L) NO LIMSW ALM -** Alarms are not generated at the limit switches.

21 **(M) ROT TRVL LIM -** Rotary travel limits are used.

22 **D FILTER X8 -** Enables 8 tap FIR filter on the derivative component of the servo loop. Used to eliminate high frequency vibrations (depending on axis motor).

23 **D FILTER X4 -** Enables 4-tap FIR filter on the derivative component of the servo loop. Used to eliminate high frequency vibrations (depending on axis motor).

24 **TORQUE ONLY -** For Haas diagnostic use only.

25 **3 EREV/MREV -** The **2 EREV/MREV** and **3 EREV/MREV** bits have two definitions, depending on whether one or two encoders are present. For single encoder systems, the bits are used to define the ratio between the electrical rotation of the spindle motor and the mechanical rotation of the motor. For two encoder systems, the definition is the electrical rotation of the motor to the mechanical rotation of the spindle motor encoder, which includes any pulley ratio between the motor and the motor encoder.

26 **2 EREV/MREV -** The **2 EREV/MREV** and **3 EREV/MREV** bits have two definitions, depending on whether one or two encoders are present. For single encoder systems, the bits are used to define the ratio between the electrical rotation of the spindle motor and the mechanical rotation of the motor. For two encoder systems, the definition is the electrical rotation of the motor to the mechanical rotation of the spindle motor encoder, which includes any pulley ratio between the motor and the motor encoder.

27 **NON MUX PHAS -** For Haas diagnostic use only.

28 **BRUSH MOTOR -** Enables the brushless motor option.

29 **(L) ROTARY AXIS -** When set to 1, the axis is treated as a rotary axis. Position will be displayed in degrees, and inputs will be interpreted as angles.

29 **(M) LINEAR DISPL -** Changes the display from degrees to inches (or millimeters) on the A and B axes.

30 **SCALE/X LO -** With **SCALE/X HI** bit, determines the scale factor used in bit **SCALE FACT/X**.

31 **SCALE/X HI -** With **SCALE/X LO** bit, determines the scale factor used in bit **SCALE FACT/X**. See below:

| HI | LO | |
|---|---|---|
| 0 | 0 | 3 |
| 0 | 1 | 5 |
| 1 | 0 | 7 |
| 1 | 1 | 9 |

**499 C P GAIN**
Proportional gain in servo loop.

**500 C D GAIN**
Derivative gain in servo loop.

**501 C I GAIN**
Integral gain in servo loop.

**502 X RATIO (Steps/Unit)**
Number of steps of encoder per unit of travel. Encoder steps supply four (4) times their line count per revolution. Thus, an 8192 line encoder and 6mm pitch screw give: **8192 x 4 x 25.4 / 6 = 138718** (5 steps per unit inch/mm ratio).

**503 C MAX TRAVEL (Steps)**
Maximum negative direction of travel from machine zero in encoder steps. Does not apply to A-axis. A 20-inch travel, 8192 line encoder and 6 mm pitch screw give: **20.0 x 138718 = 2774360**.

**504 C ACCELERATION**
Maximum acceleration of axis in steps per second per second.

**505 C MAX SPEED**
Maximum speed for this axis in steps per second.

**506 C MAX ERROR**
Maximum error allowed in servo loop before alarm is generated. Units are encoder steps. This is the maximum allowable error in Hz between commanded speed and actual speed. The purpose of this parameter is to prevent “motor runaway” in case of phasing reversal or bad parameters.

**507 C FUSE LEVEL**
Limits average power to motor. If not set correctly, this parameter can cause an “overload” alarm.

**508 C BACK EMF**
Back EMF of motor in volts per 1000 rpm times 10. Thus a 63 volt/Krpm motor gives 630.

**509 C STEPS/REVOLUTION**
Encoder steps per revolution of motor. An 8192 line encoder gives: **8192 x 4 = 32768**

**510 C BACKLASH**
Backlash correction in encoder steps.

**511 C DEAD ZONE**
Dead zone correction for driver electronics. Units are 0.0000001 seconds.

**512 C IN POSITION LIMIT**
How close the motor must be to the endpoint before any move is considered complete when not in exact stop (G09 or G61). Units are encoder steps. As of mill version 9.06, this parameter does not apply to feeds. This parameter should be equivalent to .050 inches.

**513 C MAX CURRENT**
Fuse level in % of max power to motor. Applies only when motor is stopped.

Corresponds to maximum peak current provided by the amplifier. 4095 = 30A (small amp), 45A (Medium amp), or 60A (large amp).

**514 C D*D GAIN**
Second derivative gain in servo loop.

**515 C ACC/DEC T CONST**
Exponential acceleration time constant. Units are 1/10000 seconds. This parameter provides for a constant ratio between profiling lag and servo velocity at the endpoint of a rapid motion. It is also the ratio between velocity and acceleration.

## 516 C PHASE OFFSET

The motor phase offset for C motor. Constant value, the value has no units.

## 517 C GRID OFFSET

Shifts the effective position of the encoder Z pulse. It can correct for a motor or home switch positioning error.

## 518 C EXACT STOP DIST.

This parameter controls how close the axis must be to its end point when exact stop is programmed. They apply in G09 and G64.They are in units of encoder steps. A value of 34 would give **34/138718 = 0.00025 inch. To change the value of this parameter permanently, the machine must be rebooted.**

## 519 C FRICTION COMPENSAT

Compensate for friction on the axis. The units are in 0.004V.

## 520 C ACCEL FEED FORWARD

Set the feed forward gain for the axis servo. Constant value, it has no units.

## 521 C SCREW COMP. COEF.

Coefficient of heating of the ballscrew, and is used to decrease or shorten the screw length.

## 522 C AIR BRAKE DELAY

Delay provided for air to release from the brake prior to moving. Units are milliseconds.

## 523 C TOOL CHANGE OFFSET

## 524 C LEAD COMP 10E9

## 526 C SWITCH B

Parameter 562 is a collection of single-bit flags used to turn servo related functions on and off. The left and right cursor arrows are used to select the function being changed. All values are 0 or 1 only. The function names are:

- **0** **A LIN SCALE EN** - Enables linear scales for the A-axis.
- **1** **A INVRT LN SCL** - Inverts the A-axis linear scale.
- **2** **UNUSED** - Unused
- **3** **TH SNSR COMP** - Used for Ballscrew Thermal Compensation via a temperature sensor attached to the ball nut. When this bit is set to 1, the feature is activated for that axis. Note that the feature can only be used when temperature sensors are installed.
- **4** **A 2ND HOME BTN** - Moves the axis to coordinate specified in Work Ofset G129
- **5** **A NEG COMP DIR** - Negates the direction of thermal compensation
- **6** **A DELAY AXIS 0** - When set, indicates that this axis should be zeroed in Phase II of the zeroing process rather than the default, Phase I.
- **7** **MAX TRAV INP**
- **8** **NO ZERO/NOHOME** - Intended for lathes that have extra tools mounted on the outside of the turret. If this bit is set to zero, it will have no effect. If it is set to 1, the associated axis will not move when Power Up/Restart, Home G28 or Auto All Axes is pressed. The reason for this feature is to help prevent collisions between tools mounted on the outside of the turret and a sub-spindle mounted on the tailstock. It is important to note that a single axis Home G28 (e.g., press Z then Home G28) and any G28 specified in a program will still cause the axis to move regardless of the value of this parameter bit. Exercise care when commanding any axis move.
- **11** **A REVERSE DIR** - Reverse direction of power to motor.
- **12** **Z AMP DECODE** - Governs how amplifier alarms are generated. A 0 indicates an old model amplifier and 1 indicates a smart amplifier.

## 527 C SCREW COMP T. CONST

## 528 C SCALE GAIN MULT

Used on machines with linear scales. Linear scales are used to continuously correct any errors in encoder position. The parameter determines the gain of the correction factor; that is, how fast it corrects, and should be set to 40.

## 529 C LINEAR SCREW OFFS

Used on machines with linear scales. This parameter accounts for the unused portion of the ballscrew between zero and the actual motor.

## 531 C SCALES PER REV

Used on machines equipped with linear scales.

## 532 C SPINDLE THERM COEF.

Supports Spindle Head Thermal Compensation feature.

## 534 Ss SWITCH A

Parameter 1 is a collection of single-bit flags used to turn servo related functions on and off. The left and right cursor arrows are used to select the function being changed. All values are 0 or 1 only. The function names are:

0 **REV ENCODER -** Reverses the direction of encoder data.

1 **REV POWER -** Reverses the direction of power to motor.

2 **REV PHASING -** Reverses motor phasing.

3 **DISABLED -** Disables the X-axis.

4 **Z CH ONLY -** With **A** only, indicates no home switch.

5 **AIR BRAKE -** With **A** only, indicates air brake is used.

6 **DISABLE Z T -** Disables encoder **Z** test (for testing only).

7 **SERVO HIST -** Graph of servo error (for diagnostics only).

8 **INV HOME SW -** Inverted home switch (NC switch).

9 **INV Z CH -** Inverted **Z** channel (normally high).

10 **CIRC. WRAP. (L) -** When Parameter 498 bit 10, is set to 1, the lathe automatically unwinds the C-axis no more than half a rotation. When the bit is set to zero, it behaves as if the C-axis had been rotated many times and disengaged. When it is engaged again, the control zeroes it by unwinding as many times as it was wound.

10 **CIRC. WRAP. (M) -** With **A** only, causes 360 wrap to return to 0.

11 **NO I IN BRAK -** With **A** only, removes **I** feedback when brake is active.

12 **LOW PASS +1X -** Adds 1 term to low pass filter.

13 **LOW PASS +2X -** Adds two terms to low pass filter.

14 **OVER TEMP NC -** Selects a normally closed overheat sensor in motor.

15 **CABLE TEST -** Enables test of encoder signals and cabling.

16 **Z TEST HIST -** History plot of Z channel test data.

17 **SCALE FACT/X -** If set to 1, the scale ratio is interpreted as divided by X; where X depends on bits **SCALE/X LO** and **SCALE/X HI.**

18 **INVIS AXIS -** Creates an invisible axis.

19 **(L) DIAMETER PRG -** Sets diameter programming. When set to 1, it interprets inputs as diameter instead of radii.

19 **(M) ALM ON LM SW -** Rotary alarms at the limit switch.

20 **(L) TRAVL LIMITS -** Travel limits are used.

20 **(M) CK TRAVL LIM A -** Rotary travel limits are used. On mills with the Gimbaled Spindle (used on the VR series mills), A and B axes **CK TRAVL LIM** must be set to 1.

21 **(L) NO LIMSW ALM -** Alarms are not generated at the limit switches.

21 **(M) ROT TRVL LIM -** Rotary travel limits are used.

22 **D FILTER X8 -** Enables 8 tap FIR filter on the derivative component of the servo loop. Used to eliminate high frequency vibrations (depending on axis motor).

23 **D FILTER X4 -** Enables 4-tap FIR filter on the derivative component of the servo loop. Used to eliminate high frequency vibrations (depending on axis motor).

24 **TORQUE ONLY -** For Haas diagnostic use only.

25 **3 EREV/MREV -** The **2 EREV/MREV** and **3 EREV/MREV** bits have two definitions, depending on whether one or two encoders are present. For single encoder systems, the bits are used to define the ratio between the electrical rotation of the spindle motor and the mechanical rotation of the motor. For two encoder systems, the definition is the electrical rotation of the motor to the mechanical rotation of the spindle motor encoder, which includes any pulley ratio between the motor and the motor encoder.

26 **2 EREV/MREV -** The **2 EREV/MREV** and **3 EREV/MREV** bits have two definitions, depending on whether one or two encoders are present. For single encoder systems, the bits are used to define the ratio between the electrical rotation of the spindle motor and the mechanical rotation of the motor. For two encoder systems, the definition is the electrical rotation of the motor to the mechanical rotation of the spindle motor encoder, which includes any pulley ratio between the motor and the motor encoder.

27 **NON MUX PHAS -** For Haas diagnostic use only.

28 **BRUSH MOTOR -** Enables the brushless motor option.

29 **(L) ROTARY AXIS -** When set to 1, the axis is treated as a rotary axis. Position will be displayed in degrees, and inputs will be interpreted as angles.

29 **(M) LINEAR DISPL -** Changes the display from degrees to inches (or millimeters) on the A and B axes.

30 **SCALE/X LO -** With **SCALE/X HI** bit, determines the scale factor used in bit **SCALE FACT/X**.

31 **SCALE/X HI -** With **SCALE/X LO** bit, determines the scale factor used in bit **SCALE FACT/X**. See below:

| HI | LO | |
|---|---|---|
| 0 | 0 | 3 |
| 0 | 1 | 5 |
| 1 | 0 | 7 |
| 1 | 1 | 9 |

### 535 Ss P GAIN
Proportional gain in servo loop.

### 536 Ss D GAIN
Derivative gain in servo loop.

### 537 Ss I GAIN
Integral gain in servo loop.

### 538 Ss SLIP GAIN
Calculated slip rate depends on two other variables: speed and current. Slip rate = slip gain x (speed/max speed) x (current/max current). The slip gain value is the value that slip rate would assume at maximum speed, and maximum current (16.384 =1 Hz).

### 539 Ss MIN SLIP
Minimum value allowed from the slip rate. From the equation: Slip rate = slip gain x (speed/max speed) x (current/max current). It can be seen that at a zero speed, the slip rate would become zero; therefore, a minimum value for slip rate is required (16.384 = 1 Hz).

### 540 Ss ACCELERATION
Maximum acceleration of axis. The value is the units of encoder steps/second/second at the motor.

### 541 Ss MAX FREQ
See Parameter 8 for description. Frequency at which the motor will be run when maximum spindle rpm is commanded. Units: 0.01 Hz (two implied decimal places).

### 542 Ss MAX ERROR
Maximum allowable error (in Hz) between commanded spindle speed and actual speed. If set to zero, it will default to 1/4 of Parameter 183.

### 543 Ss FUSE LEVEL
See Parameter 10 for description.

### 544 Ss DECELERATION
See Parameter 10 for description. Maximum deceleration of axis in encoder steps per second per second.

### 545 Ss MOT HI GEAR ST/REV
Used when a Vector Drive is installed. It takes on two meanings, depending on how many spindle encoders are used on the machine. If only one encoder is present, it is the number of encoder steps per mechanical revolution of the spindle motor when the transmission is in high gear. (On direct drive machines, the encoder is mounted on the motor, while on others, it is on the spindle or transmission output.) N = (Encoder steps/enc rev)/(Enc pulley ratio X High Gear Ratio). For machines with a spindle and spindle motor encoder, it is the number of spindle motor

encoder steps per mechanical revolution of the encoder. Its purpose is to specify the resolution of the spindle motor encoder. This parameter is used in conjunction with Parameter 176 bits 25 and 26, which control the ratio between the electrical revolution of the motor to the mechanical revolution of the encoder. If a vector drive is not installed, this parameter is called **Steps/Revolution** and is not used.

### 546 Ss ORIENT GAIN
Proportional gain used in the position control loop when performing a spindle orientation.

### 547 Ss BASE FREQ
Rated frequency of the motor.

### 548 Ss HI SP CURR LIM
At speeds higher than the base frequency, the maximum current that is applied to the motor must be reduced. This is done linearly from base frequency to max frequency. This value is the max current at the max frequency.

### 549 Ss MAX CURRENT
Sets maximum current allowed from the vector drive to the spindle motor: 4095 = max.

### 550 Ss MAG CURRENT
Magnetization component of the current in the motor, also called the flux or field current.

### 551 Ss SPIN ORIENT MARGIN
When a spindle orientation is done, if the actual position of the spindle is within this value (plus or minus), the spindle will be considered locked. Otherwise, the spindle will not be locked.

### 552 Ss SPINDLE STOP FREQ
Spindle considered stopped (discrete input SP ST*=0) when speed drops below this value. Units are encoder steps/millisecond.

### 553 Ss START/STOP DELAY
This delay is used at the start of motion to magnetize the rotor before acceleration starts. When the motor comes to a stop it remains energized for this amount of time. Units are in milliseconds.

### 554 Ss ACCEL LIMIT LOAD
Used when a Vector Drive is installed. It is % load limit during acceleration. If load reaches this limit, control slows down acceleration. If Vector Drive not installed, it is called C-axis **Exact Stop Distance**, and not used.

### 555 Ss SWITCH FREQUENCY
Frequency at which the spindle motor windings are switched. Note that there is a hysteresis band around this point, defined by Parameter 198.

### 556 Ss SWITCH HYSTERESIS
Defines the + hysteresis band around Parameter 197. For example, if Parameter 197 is 85 Hz, and Parameter198 is 5 Hz, the switching will take place at 90 Hz when the spindle is speeding up, and at 80 Hz when the spindle is slowing down.

### 557 Ss PRE-SWITCH DELAY
Amount of time allowed for the motor current to drop before winding change contactors are switched.

### 558 Ss POST-SWITCH DELAY
Amount of time allowed for contactors to stabilize after switch is commanded, before current is applied to motor.

### 559 Ss D:Y CURRENT RATIO
Defines the ratio between the two winding configurations. The default winding is Y, and the parameters are set for the Y winding. Used to adjust the parameters for the delta winding when the windings are switched.

### 560 Ss BELT COMPENSATION
Belt Compensation

### 562 Ss SWITCH B
Parameter 562 is a collection of single-bit flags used to turn servo related functions on and off. The left and right cursor arrows are used to select the function being changed. All values are 0 or 1 only. The function names are:

0 **A LIN SCALE EN** - Enables linear scales for the A-axis.

1 **A INVRT LN SCL** - Inverts the A-axis linear scale.

2 **UNUSED** - Unused

3 **TH SNSR COMP** - Used for Ballscrew Thermal Compensation via a temperature sensor attached to the ball nut. When this bit is set to 1, the feature is activated for that axis. Note that the feature can only be used when temperature sensors are installed.

4 **A 2ND HOME BTN** - Moves the axis to coordinate specified in Work Ofset G129

5 **A NEG COMP DIR** - Negates the direction of thermal compensation

6 **A DELAY AXIS 0** - When set, indicates that this axis should be zeroed in Phase II of the zeroing process rather than the default, Phase I.

7 **MAX TRAV INP**

8 **NO ZERO/NOHOME** - Intended for lathes that have extra tools mounted on the outside of the turret. If this bit is set to zero, it will have no effect. If it is set to 1, the associated axis will not move when Power Up/Restart, Home G28 or Auto All Axes is pressed. The reason for this feature is to help prevent collisions between tools mounted on the outside of the turret and a sub-spindle mounted on the tailstock. It is important to note that a single axis Home G28 (e.g., press Z then Home G28) and any G28 specified in a program will still cause the axis to move regardless of the value of this parameter bit. Exercise care when commanding any axis move.

11 **A REVERSE DIR** - Reverse direction of power to motor.

12 **Z AMP DECODE** - Governs how amplifier alarms are generated. A 0 indicates an old model amplifier and 1 indicates a smart amplifier.

### 563 Ss Reserved

Reserved.

### 569 Ss SPINDLE THERM T.C.

Supports Spindle Head Thermal Compensation feature.

### 570 (L) SUBSPIN ENC ST/REV

Sets the number of encoder steps per revolution of the subspindle encoder.

### 571 (L) SUBSPINDLE ST/REV

Sets the number of encoder steps per revolution of the subspindle. It only applies to the subspindle rigid tapping option.

### 572 (L) C AXIS ENG TIMEOUT

Specifies the C-axis timeout value for seeing the engaged switch on engagement or the disengaged switch on disengage. The units are in milliseconds and it should be set to 1000 for all lathes.

### 573 (L) C AXIS ENG DELAY 1

Specifies C-axis delay after spindle orientation and before engagement. Its purpose is to let the spindle orientation settle. The units are milliseconds and it should be set to 250 for all lathes.

### 574 (L) C AXIS ENG DELAY 2

Specifies the C-axis delay after engagement before the motion completes. Its purpose is to allow the C-axis engagement to come up to pressure. Units are milliseconds and should be set to 250 for all lathes.

### 575 (L) THRD PTCH FACT PPM

Allows the customer to factor feedrate on G32, G76 and G92 threading as necessary for particular applications.The units are ppm (parts per million.) This parameter can be adjusted, for example, increasing the value by 100 advances the thread lead by 1 ten-thousandth of an inch per inch. This parameter is internally limited to 1000.

### 576 (L) MAX SS RPM LOW GEAR

Max subspindle rpm in low gear. This is maximum rpm available to subspindle. When this speed is programmed, the D-to-A output is +10V and subspindle drive must be calibrated to provide this. Gear ratio low to high is 4.1:1.

### 577 (L) SS ORIENT OFFSET

Subspindle Orientation Offset. It is used to orient the subspindle properly anytime it needs to be locked, such as prior to a tool change, or orient subspindle command. This is used for the vector drive and the value is detemined at assembly time. The Subspindle position is displayed on the Pos-Raw Dat screen just to the right of System Time.

## 578 (L) SS HIGH GR MIN SPD

Command speed used to rotate subspindle motor when orienting subspindle in high gear. Units are maximum subspindle rpm divided by 4096.

## 579 (L) SS LOW GR MIN SPD

Command speed used to rotate subspindle motor when orienting subspindle in low gear. Units are maximum subspindle rpm divided by 4096.

## 580 (L) TS HYD RETRACT TIME

Added for the SL-10 hydraulic no-encoder tailstock. It specifies the amount of time (in ms) that the tailstock center will be commanded to retract as a result of commanding an M22 and only takes affect when Simple TS is set to 1.

## 581 (L) APL FLIPPER SETTLE

Supports the Haas Lathe APL. It specifies the rotational time for the gripper after the switch is encountered and should be set to 100. Units are milliseconds.

## 582 (L) APL FLIPPER TIME OT

Supports the Haas Lathe APL. Units are milliseconds.

## 583 (L) APL MAX POSITIONS

Supports the Haas Lathe APL. It specifies the number of switch positions in rotation.

## 584 (L) APL GRIP OPEN TIME

Supports Haas Lathe APL. It specifies maximum allowable time for opening the gripper. Units are milliseconds.

## 585 (L) APL GRIP CLOSE TIME

Supports the Haas Lathe APL. It specifies the maximum allowable time for closing the gripper and should be set to 500. Units are milliseconds.

## 586 (L) UNUSED

## 587 (L) EXTENDED PUSH TIME

Supports bar feeder pusher rod which is mounted on the bar feeder trolley (for bar feeders with 1-foot extension option). The units are 50th's of a second. It causes a delay of the amount of time specified to enable the pusher rod to full extend before the trolley begins to travel back to the home position. This parameter should be set to 150 (3 seconds) on the SL-30 Big Bore and SL-40 only. For all other lathes, it should be set to zero. On older lathes without the pusher rod, this parameter will have no effect. Note also that with this change, the I/O board discrete output has been changed from #23 to #1.

## 588 X ENC. SCALE FACTOR

This axis parameter works in place of the axis parameters SCALE/X LO and SCALE/X HI. If SCALE FACT/X is set to 1, the scale ratio is determined by SCALE/X LO and SCALE/X HI as follows:

| | HI | LO |
|---|---|---|
| 0 | 0 | 3 |
| 0 | 1 | 5 |
| 1 | 0 | 7 |
| 1 | 1 | 9 |

If, however, **SCALE FACT/X** is set to zero, the value of **ENC. SCALE FACTOR** is used for the scale ratio instead. Note that any value outside the range of 1 to 100 will be ignored and the scale ratio will remain unaffected. Note also that currently, these parameters are intended for use only on rotary axes (A and B).

## 589 Y ENC. SCALE FACTOR

See Parameter 588 for description.

## 590 Z ENC. SCALE FACTOR

See Parameter 588 for description.

## 591 A ENC. SCALE FACTOR

See Parameter 588 for description.

## 592 B ENC. SCALE FACTOR
See Parameter 588 for description.

## 593 C ENC. SCALE FACTOR
See Parameter 588 for description.

## 594 U ENC. SCALE FACTOR
See Parameter 588 for description.

## 595 V ENC. SCALE FACTOR
See Parameter 588 for description.

## 596 W ENC. SCALE FACTOR
See Parameter 588 for description.

## 599 Ss ENC. SCALE FACTOR
This axis parameter works in place of the axis parameters SCALE/X LO and SCALE/X HI. If SCALE FACT/X is set to 1, the scale ratio is determined by SCALE/X LO and SCALE/X HI as follows:

| | HI | LO |
|---|---|---|
| 0 | 0 | 3 |
| 0 | 1 | 5 |
| 1 | 0 | 7 |
| 1 | 1 | 9 |

If, however, **SCALE FACT/X** is set to zero, the value of **ENC. SCALE FACTOR** is used for the scale ratio instead. Note that any value outside the range of 1 to 100 will be ignored and the scale ratio will remain unaffected.

## 600 PEAK SPIN. PWR-KW
Supports the spindle kilowatt (KW) load display that appears on the current commands page, next to the spindle load percentage. It should be set to the peak power output in KW for the spindle motor.

## 601 (M) TOOL CHANGE DELAY
On a mill where the operator must be warned that a running program doing a tool change (no enclosure) it beeps and delays for the duration specified by Parameter 601. If Parameter 601 is set to zero, there will be no beep or delay. If the operator changes tools by pressing buttons on any kind of tool changer, there will be no beep or delay. If the machine has a manual tool changer and M06 is commanded from a running program, there will be no beep or delay. The control will stop and prompt the operator to manually insert the tool.

## 602 (L) CHUCK FACE DISTANCE
Supports the brushless bar feeder. When executing G105 Q4, a new bar is loaded, measured and pushed through the spindle and halted just before the chuck face. This parameter specifies the distance (in 1/10000 inch) that should be left between the bar and the chuck face. It should be set as follows:

Mini-Lathe 440000
SL-10 500000
SL-20 540000
SL-30 540000
SL-30BB 650000
SL-40 650000
TL-15 540000

## 603 COOLANT LEVEL MIN
Coolant Level Sensor minimum level. Used to calibrate the bar graph.

## 604 COOLANT LEVEL MAX
Coolant Level Sensor maximum level. Used to calibrate the bar graph.

## 605 (M) PALLET CHANGER TYPE
Defines the type of pallet changer on the machine. Also see Parameter 606

## 606 (M) NUMBER OF PALLETS
Number of pallets present in the installed pallet changer. Also see Parameter 605.

| Pallet Changer | Parameter 605 | Parameter 606 |
|---|---|---|
| APC (Pallet Ready button) | 0 | 2 |
| APC (Schedule Pallet Buttons) | 2 | 2 |
| Rotary Pallet Changer (HS 1/2) | 1 | 2 |
| Quad APC | 2 | 4 |
| MDC-1 / EC300 | 3 | 2 |
| EC400 | 4 | 2 |
| 2 Pallet APC | 2 | 2 |

### 611 (L) BAR FEEDER TYPE

Supports the Bar 100 Air-Driven bar feeder. It should be set to 2 on all lathes fitted with the Bar 100, lathes without the Bar 100 should be set to zero.

### 612 (M) SPIGOT TYPE

Supports programmable coolant spigot. Type 0 uses peaks of the spigot fan for positioning. Type 1 uses the peaks and valleys of the spigot fan for positioning. All other values are treated the same as type 0. Note that if Parameter 253, Spigot Fwd Pos Dly and Parameter 304, Spigot Rev Pos Dly are non-zero, type 1 processing uses those values; otherwise, the type 1 processing calculates the delay value for positioning from Parameters 613 and 614.

### 613 (M) SPG FWD MTR DLY (MS)

Supports the programmable coolant spigot. It specifies the delay time in ms from the moment the spigot motor is turned off, to the moment the spigot is stopped in the forward direction.

### 614 (M) SPG REV MTR DLY (MS)

Supports the programmable coolant spigot. It specifies the delay time in ms from the moment the spigot motor is turned off, to the moment the spigot is stopped in the reverse direction.

### 615 (L) SS SPINDLE ACC/DECL

Supports the VTC-48. Controls the subspindle acceleration and deceleration. Units: 200ths of a step/ms/ms (same as a mill 50 taper spindle.)

### 615 (M) STG SHTL MAX TIME

Max time allowed for shuttle tool transfer. Units are milliseconds.)

### 616 (L) SS LUBE CYCLE TIME

Supports the VTC-48. It controls the subspindle lubrication in the same manner as Parameter 117. The units are 50ths of a second. If a subspindle low lube condition is found, Alarm 121, Low Lube or Low Pressure is generated and both the main spindle and the subspindle are shut down. It should be set to 108000.

### 616 (M) STG SHTL DEBOUNCE

Shuttle home switch debounce count. Units are counts.)

### 617 (L) SS SPIN.FAN OFF DEL

Supports the VTC-48. It specifies the time that the subspindle fan should continue to run after the subspindle has stopped. The units are 1/1000 of a second.

### 617 (M) STG SHTL BUMP TIME

Shuttle bump time, used by tool changer. Units are milliseconds.)

### 618 (L) LUBE CHECK DELAY

Supports the VTC-48. Specifies the time between checks on the status of the oil pressure on a VTC main spindle.

### 618 (M) TC CAROUSEL TYPE

This parameter supports the Servo Side Mount Tool Changer. It should be set to 1 for the standard DC motor tool carousel and 2 for the servo tool carousel.

### 619 PRE GEAR CHANGE DELAY

Delay time (in milliseconds) after the spindle has been commanded to stop and before the solenoid for the gear change is commanded to start.

## 620 X PLUS TRAVEL LIMIT

Note that only Parameters 623 and 624 for the A and B axes are intended to be used, and only on Trunnion Mills (VF5TR and VF6TR) where it is necessary to place the home switch in the middle of the travel range (in order to keep the table flat when at the home position) and limit movement to +/-120 degrees. The **Plus Travel Limit** parameter is used to store the number of encoder steps a rotary can take in the plus direction from its current home position. The control takes into account these updated travel limits for jog and feed conditions. For example, if the steps/unit on the A-axis is 4000 and **Plus Travel Limit** is set to 20000, the control allows the A rotary to go up to +5 degrees before stopping (assuming that encoder scale factor is set to zero). The same applies for the B-axis. This feature enables the home switch to be moved to any desired location so a rotary can make proper orientation during zero return. Note that Parameter 591 and 592, **AB Enc. Scale Factor** is applicable in determining the limits. If this parameter is set to 3, in the above example the rotary will be allowed to go up to +15 degrees due to encoder scaling. Similar results will be achieved when the **SCALE FACT/X** bit is set to 1 (based on **SCALE/X LO** and **SCALE/X HI** bits = 0). To deactivate this feature on any axis, the **Plus Travel Limit** should be set to zero.

## 621 Y PLUS TRAVEL LIMIT

See Parameter 620.

## 622 Z PLUS TRAVEL LIMIT

See Parameter 620.

## 623 A PLUS TRAVEL LIMIT

See Parameter 620.

## 624 B PLUS TRAVEL LIMIT

See Parameter 620.

## 626 U PLUS TRAVEL LIMIT

See Parameter 620.

## 627 V PLUS TRAVEL LIMIT

See Parameter 620.

## 628 W PLUS TRAVEL LIMIT

See Parameter 620.

## 629 (L) C PLUS TRAVEL LIMIT

Positive travel limit for the C axis, in encoder steps.

## 629 (M) Sp PLUS TRAVEL LIMIT

See Parameter 620.

## 630 Tt PLUS TRAVEL LIMIT

See Parameter 620.

## 631 Ss PLUS TRAVEL LIMIT

Note that only Parameters 623 and 624 for the A and B axes are intended to be used, and only on Trunnion Mills (VF5TR and VF6TR) where it is necessary to place the home switch in the middle of the travel range (in order to keep the table flat when at the home position) and limit movement to +/-120 degrees. The **Plus Travel Limit** parameter is used to store the number of encoder steps a rotary can take in the plus direction from its current home position. The control takes into account these updated travel limits for jog and feed conditions. For example, if the steps/unit on the A-axis is 4000 and **Plus Travel Limit** is set to 20000, the control allows the A rotary to go up to +5 degrees before stopping (assuming that encoder scale factor is set to zero). The same applies for the B-axis. This feature enables the home switch to be moved to any desired location so a rotary can make proper orientation during zero return. Note that Parameter 591 and 592, **AB Enc. Scale Factor** is applicable in determining the limits. If this parameter is set to 3, in the above example the rotary will be allowed to go up to +15 degrees due to encoder scaling. Similar results will be achieved when the **SCALE FACT/X** bit is set to 1 (based on **SCALE/X LO** and **SCALE/X HI** bits = 0). To deactivate this feature on any axis, the **Plus Travel Limit** should be set to zero.

## 632 X AXIS MOCON CHANNEL

Enables the X axis to be mapped to a particular MOCON channel.

**633 Y AXIS MOCON CHANNEL**
Same as Parameter 632. Set to 7 on machines originally shipped with 5.02 and later software.

**634 Z AXIS MOCON CHANNEL**
Same as Parameter 632 Set to 2 on 5.02 and later software.

**635 A AXIS MOCON CHANNEL**
Same as Parameter 632 Set to 3 on 5.02 and later software.

**636 B AXIS MOCON CHANNEL**
Same as Parameter 632 Set to 4 on 5.02 and later software.

**637 C AXIS MOCON CHANNEL**
Same as Parameter 632 Set to 5 on 5.02 and later software.

**638 U AXIS MOCON CHANNEL**
Same as Parameter 632 Set to 6 on 5.02 and later software.

**639 V AXIS MOCON CHANNEL**
Same as Parameter 632 Set to 1 on machines originally shipped with 5.02 and later software.

**640 W AXIS MOCON CHANNEL**
Same as Parameter 632 Set to 8 on 5.02 and later software.

**641 Sp AXIS MOCON CHANNEL**
Same as Parameter 632 Set to 9 on 5.02 and later software.

**642 Tt AXIS MOCON CHANNEL**
Same as Parameter 632 Set to 10 on 5.02 and later software.

**643 Ss AXIS MOCON CHANNEL**
Same as Parameter 632 Set to 11 on 5.02 and later software.

**644 X INDEXER INCREMENT**
Note that only Parameters 647 and 648 for the A and B axes are intended to be used, and only on Horizontal Mills fitted with a Rotary Indexer. The Rotary Indexer is a device that holds a part to be machined and rotates in one-degree increments. It can rotate only in rapid motion (G00), it cannot rotate in a feed motion (G01). It can be jogged by pressing a jog button, or with a jog handle. Before it can be rotated, air is applied to lift the indexer from its clamped position. The message, **A UNCLMP** (for example) will appear at the bottom of the screen, and remain as long as the rotary indexer is in the up position. When the commanded position is reached, the indexer automatically moves forward or backward to the closest proper locking angle, then settle into its clamped position.The locking angle is computed from the **Indexer Increment** parameter which is in units of one-thousandth of a degree. For example, if the A-axis **Indexer Increment** parameter is set to 1000 (1.0 degrees) and the A-axis is jogged to 25.5 degrees, when the operator leaves jog mode, the indexer will automatically settle and clamp itself at 26.0 degrees. If the parameter contains a 1 (one-thousandth of a degree) or less, the rotary indexer feature is turned off and a regular rotary platform is assumed.

**645 Y INDEXER INCREMENT**
See Parameter 644.

**646 Z INDEXER INCREMENT**
See Parameter 644.

**647 A INDEXER INCREMENTt**
See Parameter 644.

**648 B INDEXER INCREMENT**
See Parameter 644.

**649 C INDEXER INCREMENT**
See Parameter 644.

**650 U INDEXER INCREMENT**
See Parameter 644.

**651 V INDEXER INCREMENT**
See Parameter 644.

**652 W INDEXER INCREMENT**
See Parameter 644.

**653 Sp INDEXER INCREMENT**
See Parameter 644.

**654 Tt INDEXER INCREMENT**
See Parameter 644.

**655 Ss INDEXER INCREMENT**
See Parameter 644.

**656 X INDEXER DWN TIMEOUT**
Supports indexer rotary table. It specifies time (in ms) allowed for seeking indexer Down-switch. If switch is not detected within allowed time, Alarm 960, Indexer Switch not Found in Time is generated. When it is set to zero, the feature is bypassed. Parameter 69, Air Brake Delay is used as allowed time for seeking the Up-switch. If switch is not detected within the allowed time, Alarm 925, A Indexer is not Fully in the Up Position is generated.

**657 Y INDEXER DWN TIMEOUT**
See parameter 656

**658 Z INDEXER DWN TIMEOUT**
See parameter 656

**659 A INDEXER DWN TIMEOUT**
See parameter 656

**660 B INDEXER DWN TIMEOUT**
See parameter 656

**661 C INDEXER DWN TIMEOUT**
See parameter 656

**662 U INDEXER DWN TIMEOUT**
See parameter 656

**663 V INDEXER DWN TIMEOUT**
See parameter 656

**664 W INDEXER DWN TIMEOUT**
See parameter 656

**665 Sp INDEXER DWN TIMEOUT**
See parameter 656

**666 Tt INDEXER DWN TIMEOUT**
See parameter 656

**667 Ss INDEXER DWN TIMEOUT**
See parameter 656

**668 X INDEXER DOWN SETTLE**
Supports the indexer rotary table. It specifies the amount of time (in ms) the machine is allowed to settle after de-

tecting the indexer Down-switch. If the parameter is zero, the feature is backward compatible.

### 669 Y INDEXER DOWN SETTLE
See parameter 668

### 670 Z INDEXER DOWN SETTLE
See parameter 668

### 671 A INDEXER DOWN SETTLE
See parameter 668

### 672 B INDEXER DOWN SETTLE
See parameter 668

### 673 C INDEXER DOWN SETTLE
See parameter 668

### 674 U INDEXER DOWN SETTLE
See parameter 668

### 675 V INDEXER DOWN SETTLE
See parameter 668

### 676 W INDEXER DOWN SETTLE
See parameter 668

### 677 SP INDEXER DOWN SETTLE
See parameter 668

### 678 Tt INDEXER DOWN SETTLE
See parameter 668

### 679 Ss INDEXER DOWN SETTLE
See parameter 668

### 680 X LEAD COMPENS SHIFT
Lead screw compensation shift factor. Shift factor when applying lead screw compensation. Lead screw compensation is based on a table of 512 offsets; each +\-127 encoder steps. A single entry in the table applies over a distance equal to two raised to this parameter power encoder steps.

### 681 Y LEAD COMPENS SHIFT
Lead screw compensation shift factor. Shift factor when applying lead screw compensation. Lead screw compensation is based on a table of 512 offsets; each +\-127 encoder steps. A single entry in the table applies over a distance equal to two raised to this parameter power encoder steps.

### 682 Z LEAD COMPENS SHIFT
Lead screw compensation shift factor. Shift factor when applying lead screw compensation. Lead screw compensation is based on a table of 512 offsets; each +\-127 encoder steps. A single entry in the table applies over a distance equal to two raised to this parameter power encoder steps.

### 683 A LEAD COMPENS SHIFT
Lead screw compensation shift factor. Shift factor when applying lead screw compensation. Lead screw compensation is based on a table of 512 offsets; each +\-127 encoder steps. A single entry in the table applies over a distance equal to two raised to this parameter power encoder steps.

### 684 B LEAD COMPENS SHIFT
Lead screw compensation shift factor. Shift factor when applying lead screw compensation. Lead screw compensation is based on a table of 512 offsets; each +\-127 encoder steps. A single entry in the table applies over a distance equal to two raised to this parameter power encoder steps.

### 685 C LEAD COMPENS SHIFT
Lead screw compensation shift factor. Shift factor when applying lead screw compensation. Lead screw compen-

sation is based on a table of 512 offsets; each +\-127 encoder steps. A single entry in the table applies over a distance equal to two raised to this parameter power encoder steps.

### 686 U LEAD COMPENS SHIFT

Lead screw compensation shift factor. Shift factor when applying lead screw compensation. Lead screw compensation is based on a table of 512 offsets; each +\-127 encoder steps. A single entry in the table applies over a distance equal to two raised to this parameter power encoder steps.

### 687 V LEAD COMPENS SHIFT

Lead screw compensation shift factor. Shift factor when applying lead screw compensation. Lead screw compensation is based on a table of 512 offsets; each +\-127 encoder steps. A single entry in the table applies over a distance equal to two raised to this parameter power encoder steps.

### 688 W LEAD COMPENS SHIFT

Lead screw compensation shift factor. Shift factor when applying lead screw compensation. Lead screw compensation is based on a table of 512 offsets; each +\-127 encoder steps. A single entry in the table applies over a distance equal to two raised to this parameter power encoder steps.

### 689 Sp LEAD COMPENS SHIFT

Lead screw compensation shift factor. Shift factor when applying lead screw compensation. Lead screw compensation is based on a table of 512 offsets; each +\-127 encoder steps. A single entry in the table applies over a distance equal to two raised to this parameter power encoder steps.

### 690 Tt LEAD COMPENS SHIFT

Lead screw compensation shift factor. Shift factor when applying lead screw compensation. Lead screw compensation is based on a table of 512 offsets; each +\-127 encoder steps. A single entry in the table applies over a distance equal to two raised to this parameter power encoder steps.

### 691 Ss LEAD COMPENS SHIFT

Lead screw compensation shift factor. Shift factor when applying lead screw compensation. Lead screw compensation is based on a table of 512 offsets; each +\-127 encoder steps. A single entry in the table applies over a distance equal to two raised to this parameter power encoder steps.

### 692 (L) STEADY REST OUTPUT

Supports the steady rest option. If a lathe has the option, it must be set to the output relay number that activates the clamping mechanism. This number can be 32 through 55 for relays #1132 through #1155, respectively. For lathes without the steady rest option, it must be zero.

### 693 (L) STEADY REST INPUT

Supports the steady rest option. If a lathe has the option and a foot pedal for the steady rest, it must be set to the input relay number for the foot pedal switch. This number can be 1 through 49 for relays #1101 through #1049, respectively. For lathes without a steady rest foot pedal, this parameter should be zero.

### 696 (M) MOM TYPE

Turns the MOM option ON.

### 697 (M) MOM PURGE SIZE (MS)

Sets pump ON time (in milliseconds).

### 698 (M) MOM PURGE OFF TIME

Sets pump off time.

### 699 (M) MOM POWER UP PURGE

Sets number of purge cycles on power-up restart.

### 700 (L) Y-AXIS WEDGE ANGLE

The physical angle between the X axis at the bottom of a wedge structure and another axis mounted on the top side of the lathe wedge. Enter angle in degrees times 10,000.

### 701 LIVE TOOLING AXIS

This parameter selects which MOCON channel the Live Tooling axis is used on. The value is 0-11, where 0=X-axis,

1=Y axis, etc.

**0 - MOCON ONE X P6**
**1 - MOCON ONE Y P7**
**2 - MOCON ONE Z P8**
**3 - MOCON ONE A P9**
**4 - MOCON ONE B P30**
**5 - MOCON ONE C P31**
**6 - MOCON TWO X P6**
**7 - MOCON TWO Y P7**
**8 - MOCON TWO Z P8**
**9 - MOCON TWO A P9**
**10 - MOCON TWO B P39**
**11 - MOCON TWO C P310**

### 702 SHUTTLE MIN TIME IN
Minimum time for the shuttle to reach the In position.

### 704 SMTC2 UNCLAMP POS
Supports the high speed tool changer. It specifies the absolute position in degrees *1000 which the TT axis will stop at in order to unclamp the tool.

### 705 SMTC2 CLAMP POS
Supports the high speed tool changer. It specifies the absolute position in degrees *1000 which the TT axis will stop at in order to clamp the tool.

### 706 TC UNCLAMP POST POS
For tool changers with one-motion tool change (type 11 per parameter 710) this parameter defines the position of the tool arm, in degrees times 1000, of where to speed up after removing the tool from the spindle.

### 707 TC CLAMP POST POS
For tool changers with one-motion tool change (type 11 per parameter 710) this parameter defines the position of the tool arm, in degrees times 1000, of where to speed up after inserting the tool into the spindle.

### 708 PALLET CHANGER AXIS
Specifies the MOCON channel of the MDC-1 and EC-300 pallet changer. It enables both the servo axis pallet changer and the Super SMTC tool changer to operate on the same machine. On an MDC-1 with a single MOCON board, this parameter must be set to 4. On an MDC-1 or EC-300 with two MOCON boards, this parameter must be set to 8. On all other machines, this parameter must be set to 0. Note also that when set to 4, B-axis parameters are used to control the pallet changer and the message “Use Tt Params” is displayed. When this parameter is set to 8, the W-axis parameters are used to control the pallet changer.

### 709 SMTC DR OUTPUT RELY
Output relay that should be activated for the tool changer door. Set to 39 for the EC-300. Set to 1 for the EC-400. Set to 26 for the HS series mills. Set to zero for all other mills without a tool changer door.

### 710 (L) TOOL CHANGER TYPE
Supports the lathe tool turrets. Set this parameter to 2 on lathes fitted with the 4-tool turret, set to 3 for the 8-tool turret (Note that for the 8-tool turret, parameter 65 Number of Tools must be set to 8. For all other lathes, it should be set to 1.).

### 710 (M) Tool Changer Type
Type of tool changer installed on machine. If this parameter is set to zero, the control automatically resets it based upon the parameters which previously specified the tool changer type. The following types are recognized:

1 Generic Geneva or umbrella type - This is the default.
2 Horizontal type using W-axis
3 Horizontal type using B-axis
4 TT-4 Lathe 4-position tool turret
5 Generic Vertical Side-Mount Tool Changer (VSMTC)

6 Super2 VSMTC, using TT-axis
7 Chain Type
8 Mori Side-Mount Tool Changer
9 Manual Tool Changer

### 711 (M) POCKET UP SETTLE

Supports a vertical mill side-mount tool changer. It specifies the amount of time, in 50ths of a second, a carousel is to wait after a tool change before it is allowed to move.

### 712 VD/MINI P.S. TYPE

This parameter specifies the Vector Drive or Mini Power supply type.

### 713 CHAMFER SWITCH ANGLE

Specifies the angle at which to switch the master/slave axis in chamfer jog mode on a TL1. Units: Degrees X 1000.

### 715 COLOR MESSAGE

Used to change color of text messages displayed at bottom of an LCD monitor. The color chart can be displayed in Debug mode. Access Curnt Comands screen and page up. Values from 0 to 255 can be used:

Black: 0
Red:5, 6, 13, 143
Yellow:30, 31, 39, 55, 63
Purple:67, 75, 77, 83, 140, 141, 198, 215
Green:24, 40, 56, 104, 120
Brown: 3, 4, 11, 12, 19, 20
Orange: 7, 15, 23
Pink: 95, 103, 111, 119, 159, 167, 175, 183
Blue: 64, 88, 210, 248

### 716 COLOR CMD POSITION

Changes the color of the positions text displayed on the Current Commands page on an LCD monitor. See colo values listed for Parameter 715.

### 717 COLOR CMD G-CODE

Changes the color of the active G and M code text displayed on the Current Commands page on an LCD monitor See color values listed for Parameter 715.

### 718 COLOR CMD AXES LOAD

Changes the color of the axis load text displayed on the Current Commands page on an LCD monitor. See color values listed for Parameter 715.

### 719 COLOR CMD BOLD TEXT

Changes the color of the large feed and speed text displayed on the Current Commands page on an LCD monitor. See color values listed for Parameter 715.

### 720 COLOR OVERRIDE

Changes the color of the spindle and axis override text displayed on the Current Commands page on an LCD monitor. See color values listed for Parameter 715.

### 721 'RUNNING' RELAY

Supports the Machine Data Collection feature which specifies output relay to be turned on when machine is in Running mode. This only works when set to 32 or larger, specifies an actual relay, and Parameter 315, bit 26, Status Relays is set to zero. If Single Block is activated while machine is running, relay may not turn off at end of current block.

### 722 (M) TOOL CLEAN 2 ON

Tool arm angle to start air blast. Units are degrees x 1000.

### 723 (M) TOOL CLEAN 2 OFF

Tool arm angle to start air blast. Units are degrees x 1000.

### 726 SERVO DR SAFE CURNT

The maximum current allowed when door has reached safe region specified by parameter 827 SERVO DR SAFE ZONE before coming to the closed position. The units are a percentage of the maximum current for the axis amplifier.

## 727 (M) APC CHAIN MIN TIME

Defines the time to wait before some switch fault checks are to begin. It should be set to 3000 on all APC mills and zero on all others. The units are milliseconds.

## 728 (L) Peak Sub SP PWR KW

Used to calculate subspindle load, which is displayed as SS LOAD on the Current Commands screen.

## 730 PWR FAULT THRESHOLD

## 731 PWR FAULT MAX TIME

Parameters 730 and 731 support the optional Power Failure Detect Module. Parameter 730, Pwr Fault Threshold units are an analog to digital value. Parameter 731, Pwr Fault Max Time units are millisecond/20. If the Power Failure Detection Module is not installed, Parameters 730 and 731 should both be set to zero.

## 732 (M) IPS PROBE

The operator can use the intuitive probe screens, on a Tool Room mill, with the IPS feature activated, a probe, and this parameter set to 1. These screens (displays) are within the setup tab, and are used to calibrate both the work and tool probe. The user can probe the length and diameter of the tools during set up. This feature allows probing of the work piece to set up the work zero offset. Refer to Engineering Document ES0566 - Intuitive Probing.

## 733 (M) APC AIR BLAST RELAY

Defines output relay that turns on the air blast on the EC-300 and MDC-500. Set to 39 for the Mill Drill Center and EC-300, or zero for all other mills.

## 734 (L) INPUT MASK (Used for the Office Lathes)

**0 TOOL TURRET UNLOCKD**
**1 TOOL TURRET LOCKED**
**2 C AXIS DISENGAGED**
**3 SPARE**
**4 C AXIS ENGAGED**
**5 SPINDLE HIGH GEAR**
**6 SPINDLE LOW GEAR**
**7 EMERGENCY STOP**
**8 DOOR SWITCH**
**9 M-CODE FINISH**
**10 BUSS PWR FAULT**
**11 LOW AIR PRESSURE**
**12 LOW LUBE PRESSURE**
**13 REGEN OVERHEAT**
**14 LOW TRANS OIL PRESS**
**15 SPARE**
**16 SPINDLE LOCK**
**17 SPINDLE FAULT**
**18 SPINDLE STOPPED**
**19 SPINDLE AT SPEED**
**20 LOW HYDRAULIC PRESS**
**21 TAILSTOCK FOOT SW**
**22 PROBE NOT HOME**
**23 SPARE**
**24 TOOL UNCLAMP REMOTE**
**25 SPARE**
**26 BRFEED EOB/SB LB SW**
**27 BRFEED Flt/SB PR SW**
**28 GROUND FAULT**
**29 G31 BLOCK SKIP**

30 BRFEED SP LK/SB EOB
31 CONVEYR OVERCURRENT

## 734 (M) INPUT MASK (Used for the Office Mills)

0 TOOL CHANGER IN
1 TOOL CHANGER OUT
2 TOOL #1 IN POSITION
3 LOW TSC PRESSURE
4 TOOL IN POSITION
5 SPINDLE HIGH GEAR
6 SPINDLE LOW GEAR
7 RESERVED
8 RESERVED
9 M-CODE FINISH
10 BUSS PWR FAULT
11 LOW AIR PRESSURE
12 LOW LUBE PRESSURE
13 REGEN. OVERHEAT
14 DRAWBAR OPEN
15 DRAWBAR CLOSED
16 SPARE
17 SPARE
18 SPARE
19 SPARE
20 LOW TRANS OIL PRESS
21 APC DOOR
22 APC PIN CLEAR #1
23 APC PIN CLEAR #2
24 TOOL UNCLAMP REMOTE
25 SPARE
26 APC PALLET #2 HOME
27 APC PALLET #1 HOME
28 GROUND FAULT
29 G31 BLOCK SKIP
30 SPIGOT POSITION
31 CONVEYR OVERCURRENT

## 735 HV ENABLE OUTPUT

Controls which output is used to enable the HV power supply.

## 736 SPINDLE TYPE

Supports Office Mill (OM) and Office Lathe (OL) NSK spindle. On all OM models, this parameter must be set to 2. On all other mills, it must be set to 1.On OL models (Office Lathes) it must be set to 3. On all other lathes, set to 1.

## 737 COMMON SWITCH 5

0 **LOCK OUT KBD TL CHG -** When set to 1, no tool change performed when Power-Up-Restart is pressed. Also, when Power-Up-Restart, ATC FWD, ATC REV or Next Tool is pressed, TOOL CH LOCKED is displayed.

1 **(L) SPARE**

1 **(M) ROTARY INDEX BUTTON -** Activates Rotary Index button on the remote control panel of the EC300 and EC1600. The button controls the A-axis rotary table. Setting 164 is used to set the rotary increment.

2 **EXTENDED MEMORY -** Provides access to the full 16 megabytes of memory, if installed. When set to 0, usable memory is limited to 1 megabyte. Note that to set this bit to 1 requires an unlock code. A separate unlock code is also required to set this bit to zero, to prevent accidentally turning off the feature. Before changing this bit to zero, ensure that less than 1 megabyte of memory is in use or G-code programs will be deleted/truncated resulting in memory corruption alarms.

3 **SPARE**

4 **SPARE**

5 **SPARE**

6 **SPARE**

7 **WORKLIGHT VIA SKBIF -** Set to 1 when the high voltage switch cable and corresponding high voltage switch in pendant is replaced by a cable from the SKBIF to a low voltage switch in the pendant. Otherwise, it is set to zero.

8 **SPINDLE MOTOR DRIVES C-AXIS -** The capability of driving the C-axis with the spindle motor has been added to the software. To enable this feature the bit must be set to 1.

9 **ENABLE HAAS EDITOR**

10 **ENABLE HARD DRIVE -** Enables the MainCon onboard memory, which behaves like a hard drive. Can only be enabled with an unlock code.

11 **ENABLE NETWORKING -** Enables the networking feature of the MainCon board. Requires an unlock code to enable.

12 **ENABLE SECOND USB -** Enables the second USB port of the MainCon board. Requires an unlock code to enable.

13 **TOOL ARM ON HOME SW -** When parameter 710 TOOL CHANGER TYPE is set to 11, this bit enables the usage of the axis home switch instead of the tool arm origin switch for the tool changer arm axis. This bit should be set to 1 when the tool changer double arm has the axis home switch as the origin switch. Currently, only the DT-1 has this configuration.

14 **CE OPERATOR KEY -** If set to 1, the key installed in the position marked “Run Mode/Setup Mode” is used. That key will allow existing normal operation but will only allow E-stop, Cycle-Start, and Feed-Hold in Run Mode.

15 **SIX SIDED ENVELOPE -** A region with six sides where the lathe axes can move freely without restrictions, bounded by X and Y max travels. If set to 1, this six sided envelope is used. If it is set to 0, a five sided envelop will be used.

### 738 FIXTURE CLAMP INPUT

Can be set to discrete input value specifying user’s fixture sensor. Zero deactivates feature. If fixture is unclamped, running the spindle will generate alarm 973 FIXTURE CLAMP FAILURE and will stop the program and the spindle.

### 739 TOOL TURRET OFFSET

Turret position offset value for turret types 2 and 3. The default value for turret type 2 (4-position turret) is 0. The default value for turret type 3 (8-position turret) is 4. Default is 0 for all other turret types.

### 740 PALLET POOL PALLETS

Specifies the number of pallets in the pallet pool system. Distinct from Parameter 606, which defines the number of pallets in the machine’s built-in rotary pallet changers or the number of table positions in an APC/QAP.

### 741 PALLET POOL LINEAR AXIS

Specifies the servo axis number controlling the pallet pool’s slider axis. A=3, B=4, U=7, W=8 etc.

### 742 PALLET POOL ROTARY AXIS

Specifies the servo axis number controlling the pallet pool’s rotary axis. A=3, B=4, U=7, W=8, etc.

### 743 PALLET POOL VERTICAL AXIS

Specifies the servo axis number controlling the pallet pool’s vertical (linear) axis. A=3, B=4, U=7, W=8 etc.

### 744 COLOR RUNPROG 1

This controls the colors of highlighted text, executed blocks, and remaining blocks in a G-Code program when it is running or in feed hold. Also see parameter 715.

### 745 COLOR RUNPROG 2

See Parameter 744

**746 COLOR RUNPROG 3**
See Parameter 744

**747 PALLET POOL LIFT DOWN DWELL**
Specifies the dwell time, in milliseconds, to wait after the switch indicates that the lift is down before “down” is assumed.

**748 PALLET POOL LIFT UP DWELL**
Specifies the dwell time, in milliseconds, to wait after the switch indicates that the lift is up before “up” is assumed.

**749 (M) FEED ACCEL ROUGH**
Applied when Rough smoothness is selected. See the definition for parameter 302.

**750 (M) FEED T CONST ROUGH**
Applied when Rough smoothness is selected. See the definition for parameter 303.

**751 (M) FEED DELTA V ROUGH**
Applied when Rough smoothness is selected.

**752 (M) FEED ACCEL FINISH**
Applied when Finish smoothness is selected. See the definition for parameter 302.

**753 (M) FEED T CONST FINISH**
Applied when Finish smoothness is selected. See the definition for parameter 303.

**754 FEED DELTA V FINISH**
Applied when Finish smoothness is selected. See the definition for parameter 314.

**755 HYDRAULIC TAILSTOCK DRIFT TOLERANCE**
Specifies the hydraulic tailstock encoder hold position tolerance. Units are 10 thousandths of an inch.

**756 HYDRAULIC TAILSTOCK RATE TOLERANCE**
Specifies the hydraulic tailstock encoder not-moving rate tolerance. Units are 10 thousandths of an inch.

**757 HYDRAULIC TAILSTOCK POSITION TOLERANCE**
Specifies the hydraulic tailstock encoder zero position tolerance. Units are 10 thousandths of an inch.

**758 PALLET POOL ROTARY POSITION**
Specifies the pallet pool slider position at which the rotator can move safely. Units are 10 thousandths of an inch.

**760 APC AIR BLAST TIME**
Specifies the duration in milliseconds of the air blast that blows chips from the pallet seat area during a pallet change. Applies to pallet changers designated type 4 in Parameter 605.

**761 TC AIR DOOR TYPE**
Supports the Air Curtain feature. On machines that have a tool changer fitted with an air curtain, this parameter should be set to 2. On all other machines, it can be set to zero or 1.

Parameters 762 -772: These parameters allow the axis to position prior to clamping the brake.

**762 X AXIS AIR BRAKE ON DELAY**
**763 Y AXIS AIR BRAKE ON DELAY**
**764 Z AXIS AIR BRAKE ON DELAY**
**765 A AXIS AIR BRAKE ON DELAY**
**766 B AXIS AIR BRAKE ON DELAY**
**767 C AXIS AIR BRAKE ON DELAY**
**768 U AXIS AIR BRAKE ON DELAY**
**769 V AXIS AIR BRAKE ON DELAY**
**770 W AXIS AIR BRAKE ON DELAY**
**771 C AXIS AIR BRAKE ON DELAY**
**772 Tt AXIS AIR BRAKE ON DELAY**
**773 Ss AXIS AIR BRAKE ON DELAY**

**774-785 ENCODER TYPE**

These parameters define the encoder type for each axis. Parameters 774-785 cover X, Y, Z, A, B, C, U, V, W, Sp, Tt, and Ss axes, respectively.

**786-797 COMMAND FIR FILTER ORDER**

Support finite impulse response (FIR) feature on Coldfire MOCON PC boards.Parameters are 786 to 797 for axes X, Y, Z, A, B, C, U, V, W, Sp, Lt, Ss in lathes. The parameter limits number of high frequency components in servo command. The parameter specifies degree of command FIR filter, which acts as low pass filter to smooth out high frequency component in the command profile. Maximum value is 128.

**798 (M) CONVEY WASHDOWN RLY**

This parameter specifies the output relay for the conveyor wash down pump.

**799 (M) SHOWER COOLANT RLY**

Specifies output relay for shower coolant pump. When installed, it should be set to 32, otherwise it should be zero.

Parameters 801, 802 and 803 are for Haas Air Closer: The pneumatically controlled air closer uses these 3 parameters and (248, 800) to govern the operation of the system. The parameters are set as follows:

**800 CHUCK CLOSER TYPE**

Selects the chuck closer type.

0 - No closer or Hydraulic closer

1 - Pneumatic closer

2 - Air Collet Closer for OL-1

**801 (L) CHUCK AIR on DELAY**

This parameter is the amount of delay in ms to turn pneumatic air on.

**802 (L)CHUCK CLOSER DELAY**

This parameter is the amount of delay in ms for the pneumatic mechanism to clamp and unclamp.

**803 (L) CHUCK AIR OFF DELAY**

This parameter is the amount of time in ms to turn pneumatic air off. There are two more existing parameters that must be set as follows:

248 Chuck Unclamp RPM. This must be set to 0.
800 Chuck Closer Type. This must be set to 1.

**804 (M) TC CAROUSEL AXIS**

This parameter supports the Servo Side Mount Tool Changer. It should be set to 6 for the servo tool carousel to specify the U axis. It can be set to 6 for all other types also as it is not used for them.

**805 PROBE ARM TYPE**

Replaces lathe parameter 278 bit 10, TL SET PROBE. Value specifies the probe arm type: 0 = no probe arm, 1 = manual probe arm, 2 = automatic probe arm.

## 806 PROBE ARM RELAY
Specifies the IOPCB Relay used to extend or retract the probe arm (see M104 and M105).

## 807 DOOR OPEN SW DELAY
Specifies a delay in 50ths of a second that stops door motor and clutch after door reaches the open-door switch.

## 808 (L) PROBE ARM START TIMEOUT
Amount of time, in milliseconds, allowed for the probe arm to start to move to the extended or retracted position before an alarm is generated.

## 809 (L) PROBE ARM TIMEOUT
Amount of time, in milliseconds, allowed for the probe arm to reach the extended or retracted position before an alarm is generated.

## 810 AXIS LUBE TYPE
Specifies the axis lubrication system type.

0 BATTERY axis (OM1A/OM2A) or Manual (SR's/TM's) lube

1 BIJUR oil system. The values in parameters 811 through 816 will be inactive.

2 Minimal Lubrication system (Grease Gun). The values in parameters 811 through 816 will be active.

3 Minimal Lubrication system (Grease Reservoir). The values in parameters 811 through 816 will be active.

## 811 AXIS INTRVL METERS
Specify axis travel in meters. When one axis reaches the specified interval, the minimal lubrication grease system will activate to lubricate all axes. This parameter is activated depending on the value of parameter 810.

## 812 AXIS LUBE ON TIME
Specifies the duration in milliseconds that axis lubricant is discharged. Grease delivery is single shot per activation. 20,000 milliseconds assures pump activation for type "2". This parameter is activated depending on the value of parameter 810.

## 813 AXIS PRESSURE TIME
Specifies the minimum stable high pressure detection time in milliseconds during axis lubricant discharge. The control will display the LOW LUBE message if the system does not sustain pressure for the specified duration. A "0" value means no time limit for pressure. A value of zero is required for type '2' (Parameter 810) lube systems. A nonzero value is required for type '3' lube systems.

## 814 AXIS PRESSURE TIMEOUT
Specifies the duration in milliseconds after the start of the axis lubrication cycle, during which high pressure is expected to occur. If pressure is not detected during this time, the control will display the LOW LUBE message. This parameter is inactive when parameter 813 is "0". This parameter is activated depending on the value of parameter 810.

## 815 AXIS LUBE INPUT
Specifies the input relay for the axis lubrication pressure sensor. Active when Parameter 810 is '2' or '3'.

## 816 AXIS LUBE OUTPUT
Specifies the output relay for the axis lubrication pump. Active when parameter 810 is '2' or '3'.

## 817 SPINDLE LUBE TYPE
Specifies which spindle lubrication system is installed.

0 or 1 Bijur oil system. The value sin parameter 818 through 822

2 Distance-based oil lubrication system. The values in parameters 818 through 822 will be active.

## 818 SPINDLE ROTATION INTERVAL
Specifies the maximum number of spindle revolutions in thousands, after which the spindle will be lubricated. No lubrication will be done if the machine is not running. this parameter is activated when parameter 817 is 2.

## 819 SPINDLE LUBE TIME INTERVAL

Specifies the maximum number of minutes of spindle run-time, after which the spindle will be lubricated. No lubrication will be done if the machine is not running. This parameter is activated when parameter 817 is 2.

## 820 SP LUBE TIME

Specifies the duration in milliseconds that spindle lubricant is discharged. This parameter is activated when parameter 817 is 2. 10,000 means 2 drops (.022 ml) of oil delivered.

## 821 SP LUBE INPUT

Specifies the input relay for the spindle lubrication pressure sensor. This parameter is activated when parameter 817 is 2.

## 822 SP LUBE OUTPUT

Specifies the output relay for the spindle lubrication pump. This parameter is activated when parameter 817 is 2.

## 823 AUTO DOOR TYPE

Specifies the type of door being used. Values 0 to 3 are for an auto door with a clutch. Value 4 specifies an auto door driven by a servo motor.

0 Manual door, 1 Clutch door, 2 APL lathe door, 3 Mill pallet changer door, 4 Servo auto door

## 824 SERVO DR AXIS

Specifies the axis used for the Servo Auto Door. Must be set to 6 for mill and 1 for lathes. Parameter 823 must be set to 4 for Servo Autodoor.

## 825 SERVO DR WIDTH

Specifies how wide the Servo Auto Door is to open (inch x 10,000). Do not exceed maximim door opening width.

## 826 SERVO DR DECEL

The deceleration value used when the door has reached the safe zone (parameter 827) before continuing to the closed position. Units are encoder steps/millisecond/millisecond.

## 827 SERVO DR SAFE ZONE

The region at which the Servo Auto Door is to decelerate using parameter 826 and to limit current using parameter 726. Units are inches x 10,000.

## 828 PROBE ARM HOME SW

The input port number on the IOPCB where the probe arm switch for the retract position is connected.

## 829 PROBE ARM DOWN SW

The input port number on the IOPCB where the probe arm switch for the extended position is connected.

## 830 HPC LOW PRESSURE DELAY

If the high pressure coolant pump pressure continues to be low after the specified time allotted in this parameter, alarm 151 Low HPC Pressure will be generated. The HPC low pressure sensor status is shown on the Discrete Inputs columns of the Diagnostics pane with the title of HPC Low Pressure. The units are milliseconds.

## 831 LIVE TOOL STEPS/REV

The control now accommodates a gear box to drive the live tooling, and provides different live tool revolution to motor revolution ratios other than 1 to 1. Parameter 831 Live Tool Steps/Rev has been added to support the new live tooling gear box. Units are in encoder steps per one live tool revolution.

## 832 (M) COUNTER BAL CONFIG

Specifies how pressure switches are connected.

0=The ESTOP input is connected in series with one or two counter balance system switches and connects to I/O input #1007.

1=One counter balance Low Pressure input switch is connected to I/O #1038.

2=Two counter balance switches are connected. The first system's low pressure switch connects at #1038 and the second system's low pressure input switch connects at #1039.

## 833 HI INTENSITY LIGHT
Specifies the output relay to switch the high-intensity light (HIL) on and off.

## 834 AXIS MINIMUM RISE DELAY
Used with grease reservoir type 3 in parameter 810. Specifies the minimum wait time in milliseconds for the grease pressure to rise after turning air ON to the lube system. No grease pressure should rise prior to this time delay. If pressure was detected within this period, air might be in the grease line or the pressure input switch may be shorted.

## 835 AXIS MINIMUM FALL DELAY
Used with Grease Reservoir type “3” in parameter 810. Specifies the minimum wait time in milliseconds for the grease pressure to remain high after turning air OFF to lube system. If the input pressure falls within this fall delay, air might be in the grease line or the pressure input switch is bad.

## 836 UNCLAMP RAPID OVR
For tool changers with one-motion tool change (type 11 per parameter 710) this defines the speed of the tool arm, as a percentage of full rapid, to slow down to when removing the tool from the spindle.

## 837 CLAMP RAPID OVR
For tool changers with one-motion tool change (type 11 per parameter 710) this defines the speed of the tool arm, as a percentage of full rapid, to slow down to when inserting the tool into the spindle.

## 838 SPINDLE ORIENT LOW PASS FILTER CUTOFF FREQUENCY
When the spindle is in orientation mode, this parameter enables the torque low pass filter to reduce high-frequency noise or vibration. The value is in Hz from 1 to 500. This parameter works in conjunction with parameter 176 bits 12 and 13. When Parameter 838 is set to zero, these bits are used in calculations.

## 839 SUB SPINDLE ORIENT LOW PASS FILTER CUTOFF FREQUENCY
When the subspindle is in orientation mode, this parameter enables the torque lowe pass filter to reduce high-frequency noise or vibration. The value is in Hz from 1 to 500.

## 840 SPINDLE ORIENT INTEGRAL GAIN
This parameter specifies the vector controller integral gain used in spindle orientation mode. It works in conjunction with Parameter 179. If Parameter 840 is set to zero, Parameter 179 will be used during spindle orient.

## 841 SUB SPINDLE ORIENT INTEGRAL GAIN
This parameter specifies the vector controller integral gain used in subspindle orientation mode.

## 842 SPINDLE PROPORTIONAL GAIN SCALE FACTOR
This parameter specifies the servo error threshold in encoder units (1-16) that determines whether the control will use full proportional gain or scaled proportional gain for the spindle. This parameter works in conjunction with Parameter 844. Both parameters should have nonzero values for the algorithm to work.

## 843 SUB SPINDLE PROPORTIONAL GAIN SCALE FACTOR
This parameter specifies the servo error threshold in encoder units (1-16) that determines whether the control will use full proportional gain or scaled proportional gain for the sub spindle. This parameter works in conjunction with Parameter 845. Both parameters should have nonzero values for the algorithm to work.

## 844 SPINDLE DYNAMIC GAIN TYPE
When the servo error exceeds the threshold specified in parameter 842, this parameter value (1-3) defines the law used to scale down proportional gain: 1 - Linear Function; 2 - Square function; 3 - Parabolic Function.

## 845 SUB SPINDLE DYNAMIC GAIN TYPE
When the servo error exceeds the threshold specified in parameter 843, this parameter value (1-3) defines the law used to scale down proportional gain: 1 - Linear Function; 2 - Square function; 3 - Parabolic Function.

## 846 SHOCK SENSOR TYPE
Shock sensor Type.

## 847 SHOCK SENSOR INPUT
Shock sensor Input.

## 846 SHOCK SENSOR LOW PAS

Shock sensor low pas.

## 849 LIGHT TYPE

Specifies how high intensity light (HIL) and worklight will operate. When set to 1, each light will have its own momentary button. When set to 0, the two lights share a common switch.

0 is for a common switch configuration

1 is for the two switch configuration

## 850 SYNCHRONOUS SPINDLE CONTROL

This parameter enables G199 (SYNCHRONOUS SPINDLE CONTROL) on a lathe. When non-zero the parameter is used to select a method of control. This parameter should be set to 2 to enable a synchronous control spindle. This should be enabled only on models certified with synchronous spindle capability. The default value is 0 indicating G199 is disabled.

## 851 G199 SPINDLE DECELERATION

Maximum deceleration of the spindle assembly when G199 is engaged. This parameter is scaled by a factor of 1000, thus 2000 represents a deceleration of 2 revs/sec/sec.

## 852 G199 SPINDLE ACCELERATION

Maximum acceleration of the spindle assembly when G199 is engaged. This parameter is scaled by a factor of 1000, thus 2000 represents an acceleration of 2 revs/sec/sec.

## 853 G199 IN PHASE FILTER

The amount of time that the spindles must be in phase before a G199 block is considered complete. Units are in milliseconds.

## 854 G199 MAXIMUM RPM

The maximum permitted RPM in G199 mode. Commanded RPM is clamped to this value. Units are in RPM.

## 855 G199 ACCEL LIMIT LOAD

The maximum percentage load when synchronous spindle control is enabled with G199. It overrides parameters 196 and 554. Units are in percent. See parameter 196 ACCEL LIMIT LOAD.

## 856 ACC X THRESHOLD

Defines the limit for motion in the MainCON board vibration sensor's X Axis. Parameter range is 1 to 15, representing 0.5g to 7.5g in 0.5g increments. Example: Parameter 856, set to 5, generates alarm 966 (Excessive Part/Tool Imbalance) when vibration exceeds 2.5g.

## 857 ACC Y THRESHOLD

Defines the limit for motion in the MainCON board vibration sensor's Y Axis. Parameter range is 1 to 15, representing 0.5g to 7.5g in 0.5g increments. Example: Parameter 857, set to 5, generates alarm 966 (Excessive Part/Tool Imbalance) when vibration exceeds 2.5g.

## 863 SUB SPINDLE DECEL REF SPEED

Specifies the secondary spindle deceleration reference speed. Units are RPM.

## 864 SUB SPINDLE DECEL METHOD

Specifies the secondary spindle deceleration method. 0 specifies the legacy method.

## 865 SPINDLE DECEL REF SPEED

Specifies the spindle deceleration reference speed. Units are RPM.

## 866 SPINDLE DECEL METHOD

This parameter specifies the spindle deceleration method. 0 specifies the legacy method.

## 867 SERVO HISTORY SCALE

Specifies the number of times the servo history plot is scaled. A value of 0 or 1 means no scaling.

## Phase Advance Parameters

Supports a phase advance algorithm that produces maximum torque from the axis motors. The parameter values represent the phase advance angle at the maximum RPM of each axis servo motor (3000 RPM) in electrical degrees. These parameters work with CF Mocon version 15.00 or later.

**868 X PHASE ADVANCE ANGLE**
**869 Y PHASE ADVANCE ANGLE**
**870 Z PHASE ADVANCE ANGLE**
**871 A PHASE ADVANCE ANGLE**
**872 B PHASE ADVANCE ANGLE**
**873 (L)C PHASE ADVANCE ANGLE**
**877 Sp PHASE ADVANCE ANGLE**
**874 U PHASE ADVANCE ANGLE**
**875 V PHASE ADVANCE ANGLE**
**876 W PHASE ADVANCE ANGLE**
**878 (M) Tt PHASE ADVANCE ANGLE**
**878 (L) Tt PHASE ADVANCE ANGLE**
**879 (L) Ss PHASE ADVANCE ANGLE**

**884-899 NOTCH CENTER FREQ**

This specifies the center frequency in hertz (Hz) of the command notch filter for this axis. It requires CF MOCON 15.00 or later. Units are Hz * 10.

**900-915 NOTCH DEPTH FACTOR**

This specifies the depth ratio at the center frequency of the command notch filter for this axis. It requires CF MOCON 15.00 or later. Units are a ratio / 10,000.

**916 X MOCON ACC FFD COEF**
**917 Y MOCON ACC FFD COEF**
**918 Z MOCON ACC FFD COEF**
**919 A MOCON ACC FFD COEF**
**920 B MOCON ACC FFD COEF**
**925 Sp MOCON ACC FFD COEF**
**922 U MOCON ACC FFD COEF**
**923 V MOCON ACC FFD COEF**
**924 W MOCON ACC FFD COEF**
**926 Tt MOCON ACC FFD COEF**
**927 Ss MOCON ACC FFD COEF**

Parameters 932-942 support a wide range of values for any ratio of motor electrical revolution per mechanical revolution.

**932 X EREV PER MREV**
**933 Y EREV PER MREV**
**934 Z EREV PER MREV**
**935 A EREV PER MREV**
**936 B EREV PER MREV**
**937 B EREV PER MREV**
**938 U EREV PER MREV**
**939 V EREV PER MREV**
**940 W EREV PER MREV**
**941 Sp EREV PER MREV**
**942 Tt EREV PER MREV**
**943 Ss EREV PER MREV**

**948 X SECONDARY ENCODER C**
Encoder input channel for use with linear or rotary scales.

**949 Y SECONDARY ENCODER C**
Encoder input channel for use with linear or rotary scales.

**950 Z SECONDARY ENCODER C**
Encoder input channel for use with linear or rotary scales.

**951 A SECONDARY ENCODER C**
Encoder input channel for use with linear or rotary scales.

**954 U SECONDARY ENCODER C**
Encoder input channel for use with linear or rotary scales.

**955 V SECONDARY ENCODER C**
Encoder input channel for use with linear or rotary scales.

**957 Sp SECONDARY ENCODER C**
Encoder input channel for use with linear or rotary scales.

**958 Tt SECONDARY ENCODER C**
Encoder input channel for use with linear or rotary scales.

**959 Ss SECONDARY ENCODER C**
Encoder input channel for use with linear or rotary scales.

**964-975 LP FILTER CUTOFF**
These parameters are used by the servo controller to enable the torque low pass filter to reduce high-frequency noise or vibration in servo motors. Units are in Hz from 1 to 2000.

**980-992 IIR COMMAND LOW PASS FILTER CUTOFF**
These parameters are used by the servo controller to enable IIR low pass filter on servo command. It limits the amount of high-frequency component in the servo command. Units are Hz from 1 to 2000.

**997 TAILSTOCK TYPE**
Indicates tailstock type. Servo tailstock is type 3. Parameter is currently only used for type 3 behavior. Other values are ignored with respect to previous tailstock parameter bits.

**998 SERVO TS HIGH SPEED (INCHES/MINUTE)**
Servo tailstock high speed in inches per minute. This is the speed applied for tailstock rapid motion, e.g. when moving towards retract point or towards advance point.

**999 SERVO TS LOW SPEED (INCHES/MINUTE)**
Servo tailstock low speed in inches per minute. This is the speed applied for tailstock feed motion, e.g. when moving towards hold point.

## 1000-1011 DERIVATIVE CONTROL LOW PASS FILTER CUTOFF

This parameter enables the IIR low pass filter to be applied to the derivative component of a servo error to reduce high-frequency noise or vibration. Units are Hz from 1 to 2000.

## 1016 X DEADBAND

Deadband is a servo error region within which no control action will occur. This is mainly to prevent hunting around a settling point in PID servo system.

## 1017 Y DEADBAND

Deadband is a servo error region within which no control action will occur. This is mainly to prevent hunting around a settling point in PID servo system.

## 1018 Z DEADBAND

Deadband is a servo error region within which no control action will occur. This is mainly to prevent hunting around a settling point in PID servo system.

## 1019 A DEADBAND

Deadband is a servo error region within which no control action will occur. This is mainly to prevent hunting around a settling point in PID servo system.

## 1020 B DEADBAND

Deadband is a servo error region within which no control action will occur. This is mainly to prevent hunting around a settling point in PID servo system.

## 1021 C DEADBAND

Deadband is a servo error region within which no control action will occur. This is mainly to prevent hunting around a settling point in PID servo system.

## 1022 U DEADBAND

Deadband is a servo error region within which no control action will occur. This is mainly to prevent hunting around a settling point in PID servo system.

## 1023 V DEADBAND

Deadband is a servo error region within which no control action will occur. This is mainly to prevent hunting around a settling point in PID servo system.

## 1024 W DEADBAND

Deadband is a servo error region within which no control action will occur. This is mainly to prevent hunting around a settling point in PID servo system.

## 1025 Sp DEADBAND

Deadband is a servo error region within which no control action will occur. This is mainly to prevent hunting around a settling point in PID servo system.

## 1026 Tt DEADBAND

Deadband is a servo error region within which no control action will occur. This is mainly to prevent hunting around a settling point in PID servo system.

## 1027 SS DEADBAND

Deadband is a servo error region within which no control action will occur. This is mainly to prevent hunting around a settling point in PID servo system.

## 1032-1043 (X, Y, Z, A, B, C, U, V, W, TT, SP, SS) TORQUE CONSTANT

Servo motors torque constant in Nm/Arms as a multiple of 1000.

## 1048-1059 (X, Y, Z, A, B, C, U, V, W, TT, SP, SS) - AMP PEAK CURRENT

Description: Rated peak current of attached amplifier. Unit is amperes.

## Ballscrew Compensation (Mills)

Separate ballscrew compensation is provided for each of the **X**, **Y**, and **Z** axes. Operator-entered values are spaced at 0.5 inch intervals within the machine coordinate system. The compensation values are entered in inches with a resolution of 0.0001 inch. The values are used to interpolate into a table of 256 entries. The spacing between two entries in the table of 256 is defined by Parameter 58. The entered values are limited to +/-127 encoder steps; so the limit in inches is dependent on Parameters 5, 19, and 33.

Note that the first entry corresponds to machine position zero and subsequent entries are for increasingly negative positions in the machine coordinate system. The user should not ever need to adjust the ballscrew compensation tables.

## Electronic Thermal Compensation

When ballscrews rotate they generate heat, which causes ballscrews to expand. In constant duty cycles, the resultant ballscrew growth can lead to cutting errors on the next morning start up. The Haas ETC algorithm can accurately model this heating and cooling effect and electronically expand and contract the screw to give near glass scale accuracy and consistency. This compensation is based on a model of the lead screw which calculates heating based on the distance traveled and the torque applied to the motor. This compensation does not correct for thermal growth due to changes in ambient temperature or due to part expansion.

Electronic thermal compensation works by estimating heating of the screw based on the total amount of travel over its length and including the amount of torque applied to the screw. This heat is turned into a thermal coefficient of expansion and the position of the axis is multiplied by the coefficient to get a correction amount. If the machine is turned off when there is some compensation applied (due to motion and heating of screw), when the machine is turned back on, the compensation will be adjusted by the clock indicated elapsed time.

## Spindle Head Thermal Compensation

This feature integrates spindle speed over time and builds a model of thermal growth. As the model shows the spindle head warming up, the control adjusts the Z-axis to compensate for thermal growth.

## X-Axis Thermal Compensation (Lathes)

During machining, the heating of the ballscrews transfers heat by conduction to the thermal sensor body. This causes the resistance of the sensor to vary according to the temperature. The resistance value is read by the software, which compensates for the change in temperature by adjusting the program accuracy accordingly

The thermal sensor is connected to the ballscrew and compensates program accuracy for changes in ballscrew temperature.

## Machine Requirements

Machine footprints and operating dimensions are available in the brochure and the anchoring addendum

## General Requirements

Operating Temperature Range 41°F to 104°F (5 to 40°C)
Storage Temperature Range -4°F to 158°F (-20 to 70°C)
Ambient Humidity: 20% – 95% relative humidity, non-condensing
Altitude: 0-6000 ft. (Do not operate machine in explosive atmospheres (explosive vapors and /or particulate matter)

## Electricity Requirements

**IMPORTANT! REFER TO LOCAL CODE REQUIREMENTS BEFORE WIRING MACHINES.**

**ALL MACHINES REQUIRE:**
Line voltage that does not fluctuate more than ± 5%

**VS / VR Series:**
Three-phase, 50 or 60Hz power supply

**VF / VM / MDC-500 Series:**
AC input power is three phase Delta or Wye power, except that the power source must be grounded (e.g. leg or center leg for delta, neutral for Wye)
Frequency range of 47-66 Hz
Harmonic distortion not to exceed 10% of the total RMS voltage

| **20-15 HP System**<br>**STANDARD VF, and 10K** | Voltage Requirements<br>(195-260V) | High-Voltage Requirements<br>(354-488V) |
|---|---|---|
| Power Supply 1 | 50 AMP | 25 AMP |
| Haas Circuit Breaker | 40 AMP | 20 AMP |
| If service run from elec. panel is less than 100' use: | 8 GA. WIRE | 12 GA. WIRE |
| If service run from elec. panel is more than 100' use: | 6 GA. WIRE | 10 GA. WIRE |

| **40-30 HP System**<br>**50 TAPER, HT10K(40T), VM, SS mills** | Voltage Requirements<br>(195-260V) | High-Voltage Requirements[2]<br>(354-488V) |
|---|---|---|
| Power Supply1 | 100 AMP | 50 AMP |
| Haas Circuit Breaker | 80 AMP | 40 AMP |
| If service run from elec.panel is less than 100' use: | 4 GA. WIRE | 8 GA. WIRE |
| If service run from elec. panel is more than 100' use: | 2 GA. WIRE | 6 GA. WIRE |

**WARNING!**
For operator safety and proper operation, a separate earth ground wire of the same conductor size as the input power must be connected to the machine chassis. This ground wire is required for operator safety and for proper operation. This ground must be supplied from the main plant ground at the service entrance, and should be routed in the same conduit as the input power to the machine. A local cold water pipe or ground rod adjacent to the machine cannot be used for this purpose.

Input power to the machine must be grounded. For wye power, the neutral must be grounded. For delta power, a central leg ground or one leg ground should be used. The machine will not function properly on ungrounded power. (This is not a factor with the External 480V Option.)

The rated horsepower of the machine may not be achieved if the imbalance of the incoming voltage is beyond an acceptable limit. The machine may function properly, yet may not deliver the advertised power. This is noticed more often when using phase converters. A phase converter should only be used if all other methods cannot be used.

The maximum leg-to-leg or leg-to-ground voltage should not exceed 260 volts, or 504 volts for high-voltage machines with the Internal High Voltage Option.

[1] The current requirements shown in the table reflect the circuit breaker size internal to the machine. This breaker has an extremely slow trip time. It may be necessary to size the external service breaker up by 20-25%, as indicated by “power supply”, for proper operation.

[2] The high-voltage requirements shown reflect the Internal 400V configuration which is standard on European machines. Domestic and all other users must use the External 480V option.

## Air Requirements

| Machine Type | Main Air Regulator | Input Air Line Hose Size |
|---|---|---|
| 40-Taper VF-1 through VF-11, VM | 85psi | 3/8" |
| 50-Taper VF-1 through VF-11 | 85psi | 1/2" |
| VR and MDC Series | 85psi | 1/2" |

VF and VM series machines require a minimum of 100 psi at 4 scfm (VR-11 requires a minimum of 100 PSI at 9scfm) at the input to the pressure regulator on the back of the machine. This should be supplied by at least a two-horsepower compressor, with a minimum 20-gallon tank, that turns on when the pressure drops to 100 psi.

**NOTE:** Add 2 scfm to the above minimum air requirements if the operator will be using the air nozzle during pneumatic operations.

The recommended method of attaching the air hose is to the barb fitting at the back of the machine with a hose clamp. If a quick coupler is desired, use a 3/8" for 40 taper machines, or a 1/2" for 50 taper machines and machines with the side mount tool changer option.

Excessive oil and water in the air supply will cause the machine to malfunction. The air filter/regulator has an automatic bowl dump that should be empty before starting the machine. This must be checked for proper operation monthly. Also, excessive contaminants in the air line may clog the dump valve and cause oil and/or water to pass into the machine.

**NOTE:** The nipple between the air filter/regulator and the oil lubricator reservoir tank is for the optional rotary table. DO NOT use this as a connection for an auxiliary air line. Auxiliary connections should be made on the left side of the air filter/regulator.

**WARNING!**

**WHEN THE MACHINE IS OPERATING AND THE PRESSURE GAUGE (ON THE MACHINE REGULATOR) DROPS BY MORE THAN 10 PSI DURING TOOL CHANGES, INSUFFICIENT AIR IS BEING SUPPLIED TO THE MACHINE.**

## Installation Tools Required

Precision bubble level (0.0005 inch per 10")
1 1/8" hex wrench or ratchet
1 1/2" wrench
Allen Wrenches
(**VR** models) 12” Adjustable Wrench
Test indicator (0.0005)
Two 3/4" hex wrenches (open-end/box and ratchet)
Claw hammer
(VR models) 9/16 hex wrench

Forklift with the following specifications:

| | VF-1 | VF-2 | VF-3 | VF-4 | VF-5/40 | VF-5/50 | VF-6 | VF-7 | VF-8 | VF-9 | VF-10 | VF-11 |
|---|---|---|---|---|---|---|---|---|---|---|---|---|
| **Machine Weight** | **7,100** | **7,300** | **12,500** | **13,300** | **14,600** | **16,100** | **21,000** | **23,000** | **24,000** | **25,000** | **28,000** | **29,400** |
| **Fork Length** | **8'** | **8'** | **8'** | **8'** | **8'** | **8'** | **8'** | **8'** | **8'** | **8'** | **8'** | **8'** |

* The forklift must be capable of lifting at least this weight.

**VR: Forklift must be capable of lifting at least 35,000 lbs, with forks at least 8' long.**
**VS: Forklift must be capable of lifting more than 40,000 lbs, with forks at least 8' long by 6' wide.**

## Materials Required

Wire and air hose or piping as specified in the Service Requirements section,
A small amount of grease,
Way lube for the lubricator (Vactra #2).
Coolant (water-soluble synthetic, or cutting oil)

## Moving the Crate

**CAUTION! THE VMC CRATE CAN ONLY BE MOVED WITH A FORKLIFT.**

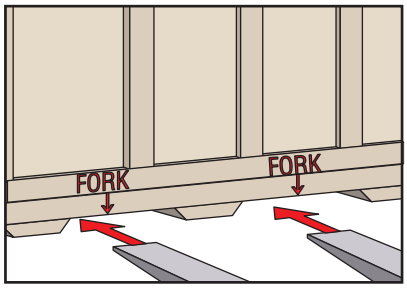


**CAUTION!** The fork positions are marked on the crate. (Also, note that there are three skids at each side of the pallet. The heavy part of the machine [the back] is positioned over the two skids that are closest together.) If the fork positions are ignored, the retaining bolts could be sheared off by the forks or the machine could tip over when it is picked up.

## Unpacking the Mill

1. Remove plastic cover.

**CAUTION!** Do not put pressure on the top of the machine as you remove the plastic.

2. Remove the coolant tank and the cleats that held it in place.

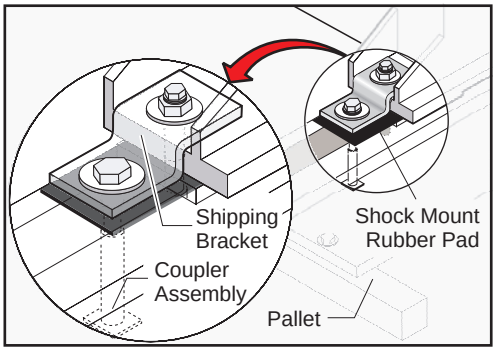


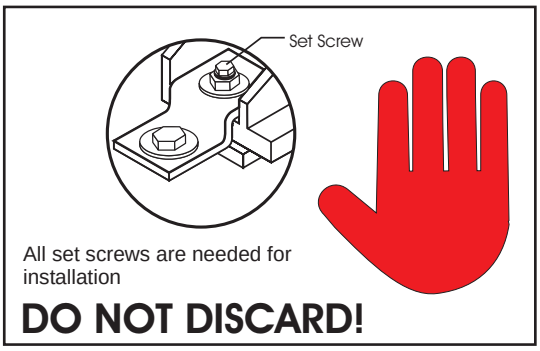


3. Unbolt the shipping brackets.

4. Remove the nuts on the leveling screws holding the shipping bracket to the base casting. Remove the shipping brackets.

5. Lift the machine off the pallet.

## Setting in Place

Keep in mind when moving the **VF, VM,** and **VR** models, much of its weight is concentrated in the column at the back. When lifting these mills from the side, it is important that the forks of the forklift be positioned as close to the back of the machine as possible without being on the pads.

**CAUTION!** Do not lift the machine any farther than necessary off the floor when moving it, and move as slowly and cautiously as possible. Dropping the machine, even from a height of a few inches, can cause injury, result in expensive repairs, and void the warranty.

**VF 1-2 and VM-2:** The only acceptable way to move this mill is to pick it up from the **SIDE** with a forklift. Follow the machine weight and fork length specifications described earlier. The forks must be set as far apart as possible without being on the pads. The forks must be positioned all the way to the back of the VMC and they must extend at least 3" past the far side of the machine base. Also, there must be about approximately 6" clearance between the forklift and the side of the machine.

**VF 3-11 and VR-11:** Lift from the **BACK** of the machine with a forklift. Follow the machine weight and fork length specifications described earlier. There must be approximately 6" clearance between the forklift and the back of the machine.

**Attempting to move the machine any other way may void the warranty.**

**CAUTION!** When lifting the machine with a forklift, be careful not to damage the sheet metal aprons with the forks.

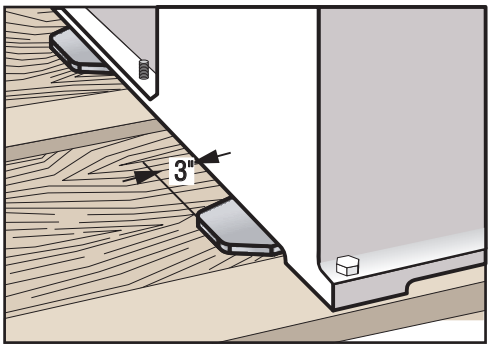


*VF 1 and 2*

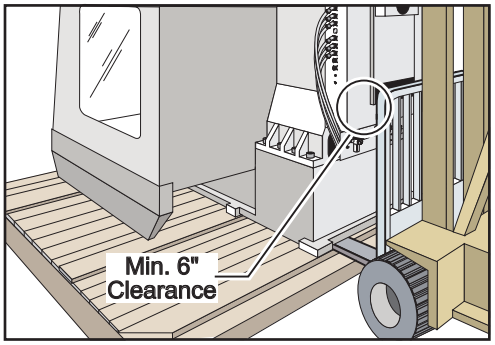


*VF 3 through 11*

1. Lift the machine clear of the pallet.

2. Thread the leveling screws through the casting until they extend about an inch out of the bottom of the machine. If a screw is excessively hard to turn, remove it, dress the threads in the hole with a 1-14 UNC tap, and inspect the screw. If the screw has dings, dress the threads with a 60° V file. (You must have good control over these screws because they are used to precision level the machine.)

3. Move the machine to where it will be located. Grease the dimple in each leveling pad and locate them under the leveling screws at the four corners. Then lower the machine.

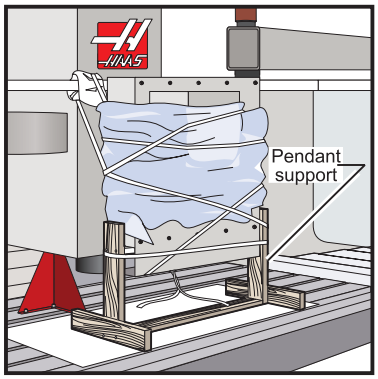


4. Remove all banding and packing material around the control panel and the doors.

5. On the VF-6/8 and VR series, remove the pendant support.

6. Remove the control arm shipping brace. On the VF-3/4, swing the control arm into position and bolt it to the support on the top front of the machine enclosure. On the VF-6/8, swing control arm to the proper position.

## Shipping Bolts - Doors (VF/VM/VR)

Remove and discard shipping bolt from the inside **both** doors

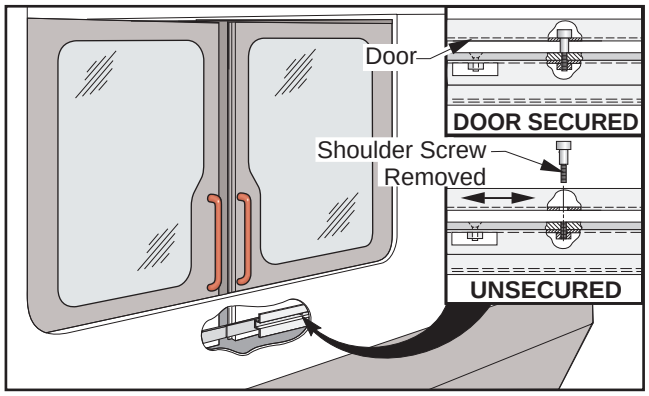


## Initial Setup

**WARNING!**

**AT THIS POINT, THERE SHOULD BE NO ELECTRICAL CONNECTION TO THE MACHINE. ELECTRICAL PANEL MUST BE CLOSED AND SECURED. WHEN MAIN SWITCH IS ON, THERE IS HIGH VOLTAGE THROUGHOUT THE ELECTRICAL PANEL (INCLUDING THE CIRCUIT BOARDS AND LOGIC CIRCUITS) AND SOME COMPONENTS OPERATE AT HIGH TEMPERATURES. THEREFORE, EXERCISE EXTREME CAUTION WHEN WORKING IN THE PANEL.**

1. Set the main switch at the upper right of the electrical panel on the back of the machine to OFF.

2. Using a screwdriver, unlock the two latches on the panel door, unlock the cabinet with the key, and open the door.

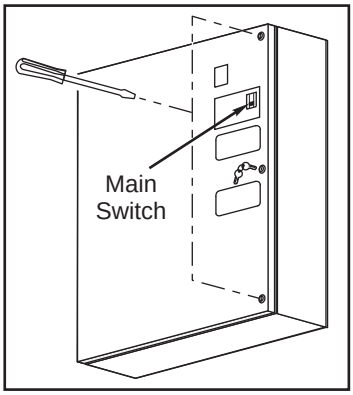


3. Take sufficient time to check all the components and connectors associated with the circuit boards. With the power off, push on them gently to make sure that they are seated in their sockets. Look for any cables that have become disconnected, look for any signs of damage and loose parts in the bottom of the panel box. If there are any signs that the machine was mishandled, call the factory before proceeding.

## Air Connection

**CAUTION!** Working with the air service required for a mill can be hazardous. Make sure that pressure has been removed from the air line before connecting/ disconnect it from the machine, or servicing parts of the air system.

1. With the pressure off in the air line, connect the air supply to the hose barb next to the air filter/ regulator. If the fitting supplied is not compatible, replace it.

2. Start the compressor; set the output to between 100 and 150 psi. Set the regulator on the machine to 85 to 90 psi.

## Electrical Connections

**NOTE:** The machine must have air pressure at the air gauge, or a “Low Air Pressure” alarm will be present on power-up.

**CAUTION!** Working with the electrical services required for the mill are extremely hazardous. The electrical power must be off and steps must be taken to ensure that it will not be turned on while you are working with it. In most cases this means turning off a circuit breaker in a panel and then locking the panel door. However, if this is not the case or are not sure how to do this, check with the appropriate personnel or obtain the necessary help before continuing.

**WARNING!**

**KEEP THE ELECTRICAL PANEL CLOSED AND THE LATCHES ON THE DOOR SECURED AT ALL TIMES EXCEPT DURING INSTALLATION AND SERVICE. AT THOSE TIMES, ONLY QUALIFIED ELECTRICIANS MAY ACCESS TO THE PANEL. WHEN THE MAIN CIRCUIT BREAKER IS ON, THERE IS HIGH VOLTAGE THROUGHOUT THE ELECTRICAL PANEL (INCLUDING THE CIRCUIT BOARDS AND LOGIC CIRCUITS) AND SOME COMPONENTS OPERATE AT HIGH TEMPERATURES. THEREFORE, EXTREME CAUTION IS REQUIRED.**

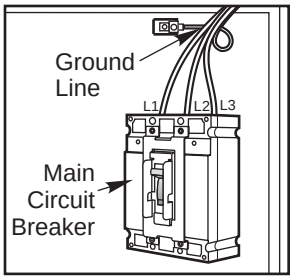


1. Hook up the three power lines to the terminals on top of the main circuit breaker at the upper right of the electrical panel. Connect the separate ground line to the ground bus to the left of the terminals.

**NOTE:** Make sure that the service wires actually go into the terminal-block clamps. (It is easy to miss the clamp and tighten the screw. A poor connection will cause the machine to run intermittently or have other problems, such as servo overloads.) To check, simply pull on the wires after the screws are tightened.

2. After the line voltage is connected to the machine, make sure that the main circuit breaker (at top right of rear cabinet) is OFF. Turn ON the power at the source. Use a digital voltmeter and appropriate safety procedures, to measure the voltage between all three pair phases at the main circuit breaker and write down the readings. The voltage must be between 195 and 260 volts (360 and 480 volts for high-voltage option).

**NOTE:** Wide voltage fluctuations are common in many industrial areas; you need to know the minimum and maximum voltage which will be supplied to the machine while it is in operation. The U.S. National Electrical Code specifies that machines should operate with a variation of +5% to -5% around an average supply voltage. If problems with the line voltage occur, or low line voltage is suspected, an external transformer may be required. If you suspect voltage problems, the voltage should be checked every hour or two during a typical day to make sure that it does not fluctuate more than +5% or -5% from an average.

**CAUTION!** Make sure that the main circuit breaker is set to OFF and the power is off at your supply panel BEFORE you change the transformer connections. Make sure that all three black wires are moved to the correct terminal block and that they are tight.

3. Check the connections on the transformer at the bottom-right corner of the rear cabinet. The three black wires labeled 74, 75, and 76 must be moved to the terminal block triple which corresponds to the average voltage measured in Step 2 above. There are four positions for the input power for the 260-volt transformer and five positions for the 480-volt transformer. The labels showing the input voltage range for each terminal position are as shown in the following illustrations.

4. Transformer T5 supplies 24VAC used to power the main contactor. There are two versions of this transformer for use on 240 and 400V machines (32-0964B and 32-0965B, respectively). The 240V transformer has two input connectors located about two inches from the transformer, which allow it to be connected to either 240V or 200V. Users that have 220V-240V RMS input power should use the connector labeled 240V, while users with 190-220V input power should used the connector labeled 200V. Users with the External High Voltage Option should use the 240V connector if they have 420V-510V 60Hz power or the 200V connector if they have 50Hz power. Failure to use the correct input connector will result in either overheating of the main contactor or failure to reliably engage the main contactor.

The 480V transformer has three input connectors, labeled 360V, 400V and 480V. Users with 340-380V 50Hz power should use the 360V connector while users with 380-440V 50Hz power should use the 400V connector. The 480V connector is not currently used.

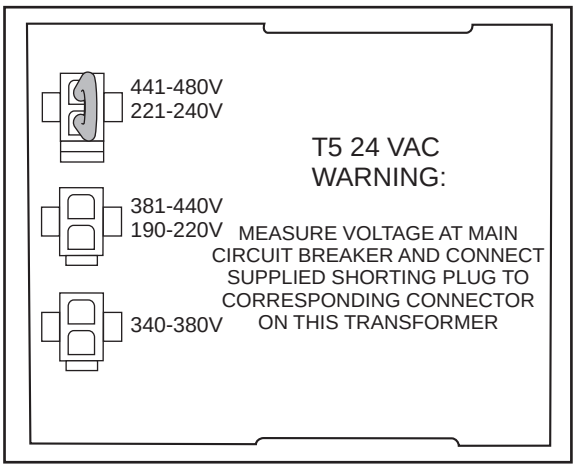


5. Set the main circuit breaker to ON. Check for evidence of problems, such as the smell of overheating components or smoke. If such problems are indicated, immediately set the main circuit breaker to OFF and call the factory before proceeding.

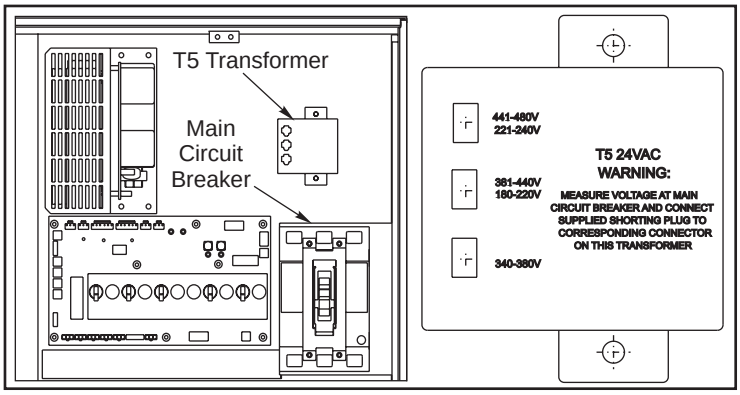


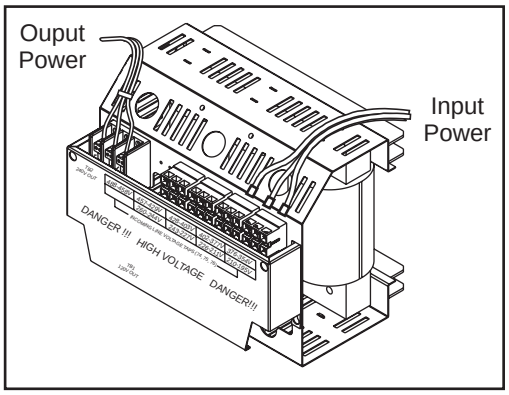


**Warning!**

**THE THROUGH THE SPINDLE COOLANT (TSC) PUMP IS A THREE-PHASE PUMP AND MUST BE PHASED CORRECTLY! IMPROPER PHASING WILL CAUSE DAMAGE TO THE TSC PUMP AND VOID THE WARRANTY. REFER TO THE TSC START-UP SECTION IF YOUR MACHINE IS EQUIPPED WITH TSC.**

6. After the power is on, measure the voltage across the bottom terminals on the main circuit breaker. It should be the same as the measurements where the input power connects to the main circuit breaker. If there are any problems, check the wiring.

7. Apply power to the control by pressing the Power-On switch on the front panel. Check the high voltage buss on the Vector Drive (pin 2 with respect to pin 3 on the terminal bus at the bottom of the drive). It must be between 310 and 360 volts. If the voltage is outside these limits, turn off the power and recheck steps 2 and 3. If the voltage is still outside these limits, call the factory. Next, check the DC voltage displayed in the second page of the Diagnostic data on the display. It is labeled DC BUS. Verify that the displayed voltage matches the voltage measured at pins 2 and 3 of the Vector Drive ± 7 VDC.

If the displayed voltage exceeds the measured voltage by 12 volts or more, install a ferrite EMI filter (65-1452) to the current command cable near its connection to the vector drive. Secure with a cable tie (See photo). Recheck voltage.

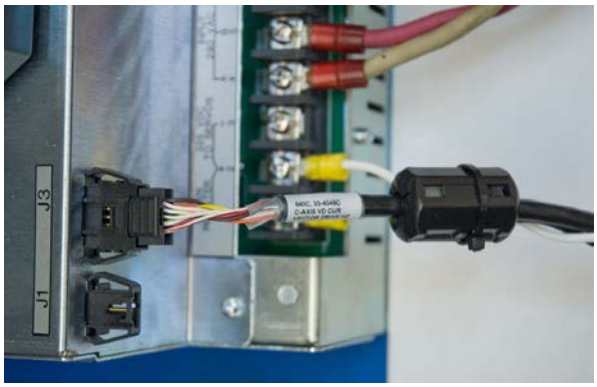


8. Electrical power must be phased properly to avoid damage to your equipment. The Power Supply Assembly PC board incorporates a “Phase Detect” circuit with neon indicators, shown below. When the orange neon is lit (NE5), the phasing is incorrect. If the green neon is lit (NE6), the phasing is correct. If both neon indicators are lit, then you have a loose wire; check the connections. Adjust phasing by swapping L1 and L2 of the incoming power lines at the main circuit breaker.

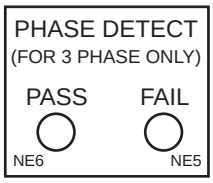


**WARNING!**

**All power must be turned off at the source prior to adjusting phasing.**

9. Turn off the power, close the door, lock the latches, and turn the power back on.

10. Remove the key from the control cabinet and give it to the shop manager.

## Installation Procedure for External 480V Transformer

### Introduction

The external transformer adds to overall machine reliability and performance; however it does require extra wiring and a place to locate it. The external transformer provides electrostatically shielded isolation. This type of transformer acts to isolate all common mode line transients and improve EMI conducted emissions.

The external transformer has a 45 KVA rating. It is a 480V 60Hz only transformer.

### Installation

The transformer should be located as close to the machine as possible. The input and output wiring of the transformer should conform to the local electrical codes and should be performed by a licensed electrician. The following is for guidance only, and should not be construed to alter the requirements of local regulations.

The input wire should not be smaller than 6 AWG for the 45KVA transformer. Cable that runs longer than 100" will require at least one size larger wire. The output wire size should be 4 AWG.

The transformer is 480V to 240V isolation transformers with delta-wound primary and secondary windings. The primary windings offer 7 tap positions, 2 above and 4 below the nominal input voltage of 480V.

The primary side should be wired as follows:

| Input Voltage Range | Tap |
|---|---|
| 493-510 | 1 (504) |
| 481-492 | 2 (492) |
| 469-480 | 3 (480) |
| 457-468 | 4 (468) |
| 445-456 | 5 (456) |
| 433-444 | 6 (444) |
| 420-432 | 7 (432) |

This should produce a voltage on the secondary side of 234-243 V RMS L-L. Verify this and readjust the taps as required. At the machine, connect the cables at the input of the internal 230V transformer to the 227-243V taps. Apply power to the machine and verify that the DC voltage between pins 2 and 3 of the Vector Drive (2nd and 3rd pins from the left) is 329-345VDC. If not, return to the 480V isolation transformer and readjust the taps as required. Do not use the taps on the internal 230V transformer to adjust the voltage.

### 50Hz Installations

The external transformers are 60Hz rated, and cannot be used at 50Hz without derating the input voltage. For these applications, tap the internal 230V transformer on the lowest setting (195-210V RMS). The external transformer should be tapped according to the following table. If these tap settings do not produce a DC bus voltage between pins 2 and 3 on the Vector Drive between 320 and 345VDC, readjust the taps on the external transformer as required. Do not move the taps on the internal transformer from the lowest position.

| Input Voltage Range | Tap |
|---|---|
| 423-440 | 1 (504) |
| 412-422 | 2 (492) |
| 401-411 | 3 (480) |
| 391-400 | 4 (468) |
| 381-390 | 5 (456) |
| 371-380 | 6 (444) |
| 355-370 | 7 (432) |

## Machine Power On

### Remove Shipping Brackets

**CAUTION! DO NOT** press POWER UP/RESTART on the control panel while the shipping brackets are under the spindle. Also, do not press the X, Y, or Z buttons or the jog handle while the shipping brackets are located under the spindle.

### Spindle Head Shipping Bracket

Loosen the four SHCS (three screws are in the table, and one is in the spindle head) holding each shipping bracket under the spindle head, and remove the two brackets.

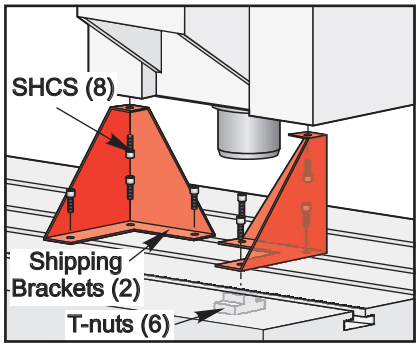


*VF 1-11 Shipping Bracket*

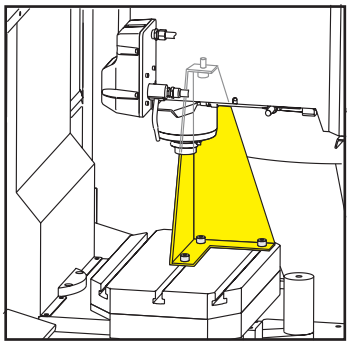

*Mill Drill Shipping Bracket*

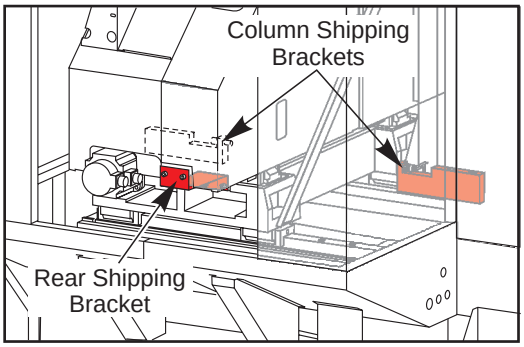


*Machine Shown with Rear Cover Removed*

*Additional Shipping Brackets (MDC only)*

### VF-11 and VR-11 Door Shipping Brackets

The operator doors are secured, top and bottom, with blocks. Remove the bolt that secures each block.

### Mill Drill Rear Shipping Bracket Removal

1. Remove the screws that secure the rear panel.

2. Remove the four screws that hold the shipping bracket to the spindle and saddle castings.

3. Remove the rear shipping bracket and two column shipping brackets (there are three bolts in each one) and replace the rear panel.

### MDC Pendant Arm Shipping Bracket Removal

1. Remove the pendant shipping bracket, there are three screws holding it in place.

2. Replace the pendant stop; orient it as shown in the illustration. Use the screws removed from the shipping bracket.

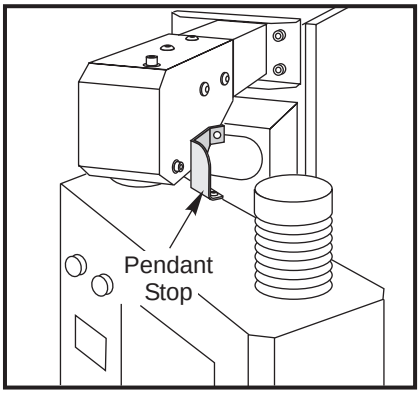


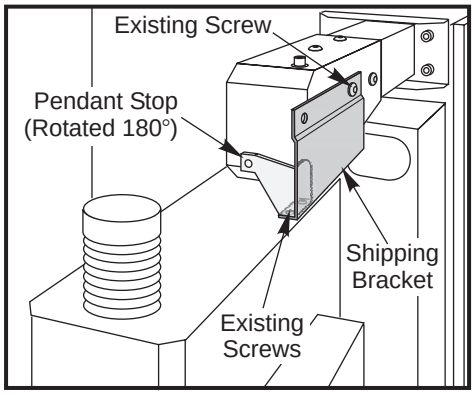


## Power On

1. With the main switch on the electrical panel set to ON, press and release POWER ON at the upper left of the control panel. You will hear a click in the back of the machine and the fans will energize. After a few seconds, the display will appear on the screen.

2. Press and release SETNG/GRAPH. Page down to the last page (press and release PAGE DOWN several times). Cursor to Setting 53, JOG W/O ZERO RETURN (with the cursor down key). Press and release the cursor right key and then press and release the WRITE key to turn this setting on. Turning on JOG W/O ZERO RETURN bypasses the zero return interlock.

3. Press and release the RESET button twice, or until there are no alarms, to turn the servos on. (The message “ALARM” appears at the lower right of the screen if any alarms are in effect.)

**NOTE:** If any alarms are present and cannot be cleared with the RESET button, press and release the ALARM / MESGS button for more information on the alarms. If you are unable to clear the alarms, write down the alarm numbers and call the factory.

4. Press and release the HANDLE JOG button and check the screen for the “JOGGING Z AXIS HANDLE .001” message. If the message does not read .001, press and release the .001 button next to the HANDLE JOG button. If the "JOGGING__" message shows the X- or Y-axis instead of Z, press and release the +Z button. Verify that the head will travel SLOWLY (not more than 0.001 inch per impulse — the ".001" part of the Z-axis message). Jog the Z-axis to the top of its travel. For the VF-1/2/3/4, jog the Z-axis to the top of its travel, and remove the flex tube cradle as shown.

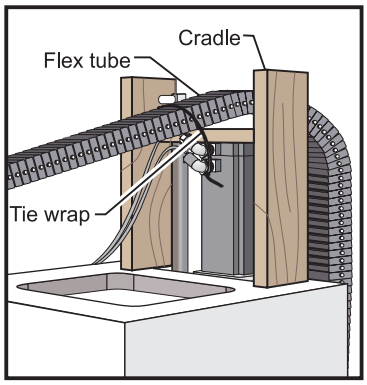


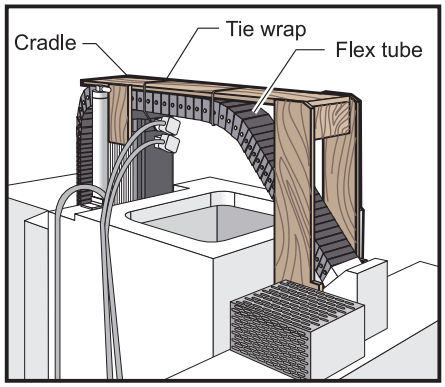


**NOTE:** The upper numbers on the buttons next to HANDLE JOG are for the jog handle use, and the lower numbers are for the jog speed in inches per minute when using the JOG buttons on the keypad.

5. Once the Z-axis is working correctly (it operates smoothly and there are no strange noises, etc.), make sure that all alarms are clear — check for the “ALARM” message at the lower right of the screen. Next, close the doors and press and release the ZERO RETURN button followed by the AUTO ALL AXES button. The Z-axis moves up slowly. After it has reached its home position, the X- and Y-axes move to their home positions.

**IMPORTANT!** To verify correct hydraulic counterbalance pressure, jog the head to the top and bottom of its travel, and ensure the tank pressures match those printed below and on the tanks.

| | VF-3/4 | VF-6-11 | VF-6/7/10 w/50T Spindle | VF-8/9/11 w/50T Spindle | VF-5 w/40T Spindle | VF-5 w/50T Spindle | VR | VS |
|---|---|---|---|---|---|---|---|---|
| **Machine at Top of Travel** | **1150 psi** | **750 psi** | **1150 psi** | **1550 psi** | **875 psi** | **1100 psi** | **1800 psi** | **1250 psi** |

## VF/VM//VR Series Leveling Overview

Leveling of the machine is required to obtain the correct right angle geometry of the VMC’s X, Y, and Z axes. Incorrect level will result in out-of-round circle milling and incorrect linear interpolation.

Leveling is done in two steps without removing covers: rough leveling ensures the machine is level for coolant and oil drainage, and fine leveling for axis geometry. Finally, the spindle sweep is checked.

**NOTE:** Many factors can affect a machine’s ability to remain level — the rigidity of the floor, the stability of the support under the floor, trains or trucks passing nearby, seismic activity, and so on. Therefore, until your experience shows how often re-leveling is required, you should check the machine’s level frequently after it is installed.

Wiring connections to power the machine must be made before the Leveling Procedure can be followed.

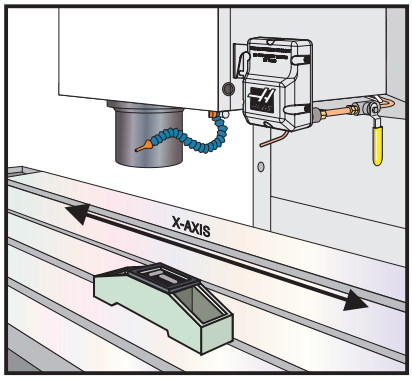


Use a precision bubble level with each division equal to **0.0005** inch per **10** inches, or **.05** mm per meter, or **10** seconds per division. Before starting, check the accuracy of your level. Set it on the table on the X axis and record the reading. Then turn it **180º** and the reading should be the same. If it is not, the level is out of calibration and should be adjusted before you continue.

### Rough Leveling

**NOTE:** For the VF-1/2, it may be necessary to pull the coolant tank toward the back of the machine to access the leveling screws.

1. Screw the four leveling screws at the corners through the base until the base is 2½" to 3" above the floor. That translates into a minimum of one inch of the leveling screw extending from the bottom of the machine or one inch between the pads and casting. Turn each screw until tension is about the same as on the other screws (same effort to turn each screw). Screw jam nuts onto the leveling screws, but do not tighten down.

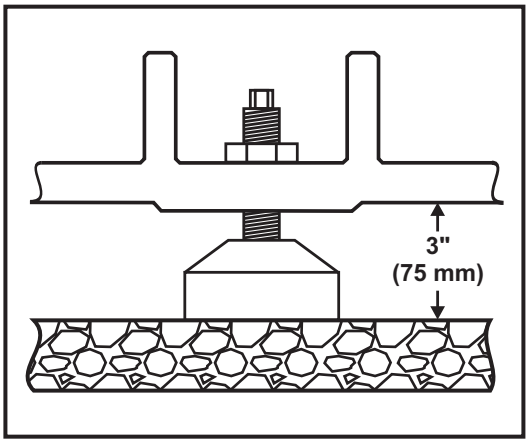


*Floor to Base Gap (14-2462)*

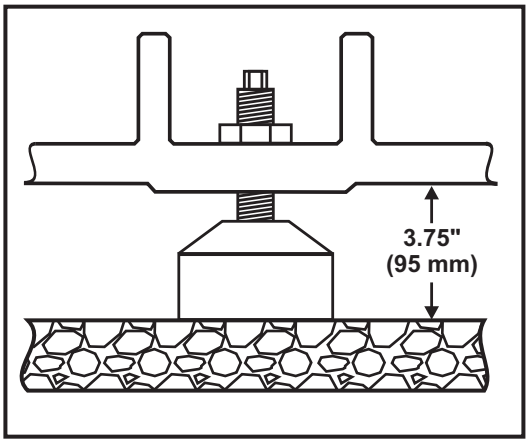


*Floor to Base Gap (14-2010)*

2. Install the two center leveling screws, ensuring that they do not touch the floor. Screw the jam nuts onto the leveling screws, but do not tighten them down.

3. Use Handle Jog set for 0.01 on the X and Y axes for the leveling procedure. This provides a good rate of travel as you manually move the table.

4. Using the jog handle, center the table under the spindle. You do not need to move the table while rough-leveling the machine.

5. Place the level parallel to the Y axis (side to side) on the table and observe the bubble. If the bubble is centered, the table is level on this axis. If the bubble is off to the left of the level, it means that the left side of the table is high. And, conversely, if the bubble is off to the right, it means that the right side of the table is high. Adjust the two front leveling screws until the level reads +/- 0.0005”.

6. Rotate the level head so that it is parallel to the X-axis. Adjust the right front and rear leveling screws until the level reads +/-0.0005.

**NOTE:** Make sure that the bubble has steadied before you take the reading.

7. Turn the screws on the low side of the machine clockwise (screw them in) a little at a time and check the level until the bubble is centered.

**NOTE:** In most cases it is better to raise a side or corner than it is to lower it — when you lower a machine there is a greater risk of running out of adjustment.

8. Repeat the previous steps with the level on the Y axis (front to back).

9. Continue this process until the machine is level on both axes.

**NOTE:** If the level is off on both axes, it indicates that one corner of the machine is high or low.

10. As the process continues, the leveling screws are turned in smaller increments — 1/4 turn, 1/8 turn, and smaller. Also, as the machine is leveled, make sure that the tension continues to be equal on the screws at all four corners.

**NOTE:** The following procedure for fine-leveling the machine must be performed exactly as noted to ensure the machine will meet all quality standards for machining operations. Failure to follow these guidelines will prevent the machine from being truly leveled and result in poor machining finishes.

## Fine Leveling

11. With the table centered, place the bubble level in the center of the table parallel to the Y-axis. Using the jog handle, move the Y-axis, stopping at the front, middle, and back of the travels. The objective is to adjust the level to make the Y-axis guides parallel. The bubble level must indicate the same reading at each position (front, middle, back). Adjust the front leveling screws as necessary. To check for Y-axis roll, position the level perpendicular to the Y-axis and jog to each end of travel. If necessary, adjust the front right or left leveling screw. To check the X-axis, jog axis to each end of travel and tighten the middle leveling screws against the leveling pads. Verify X-axis roll by placing level parallel with the Y-axis, jog X-axis to each end of travel. Repeat the above steps until there is no perceptible X or Y-axis roll.

The following procedure is simply a check of machine level. If it does not meet specifications, then you must repeat this operation. Do not adjust the middle screws at this point.

Refer to the Machine Inspection Report that accompanies your machine. Check your results with those of the report under the Table Travel Flatness verification. By duplicating these results, you will obtain the same alignment specifications that were achieved at the factory.

12. Place a **0.0005** test indicator in the spindle and sweep a **10" diameter** circle on the table (see the Machine Inspection Report in the manual for the results of this test at the factory). Grease the dimple in each of the two remaining pads, locate them under the middle leveling screws, and use these screws to compensate for any error. If there is no error, tighten the screws evenly until they contact the pads.

When fine leveling is completed, tighten the jam nuts on the leveling screws.

## Tool Changer Assembly (VR Series)

**CAUTION!** Use extreme caution when installing the tool changer. Since the machine has not been leveled yet, the tool changer may swing and cause serious injury or machine damage.

1. Remove the tool changer components from their shipping crate.

2. **IMPORTANT!** Remove the shipping bracket from the tool changer to the column (2 SHCS). Remove the tool changer enclosure from inside the machine (18 BHCS).

3. Remove the 1/2"-13 x 1 1/4" SHCS that mounts the tool changer link to the column.

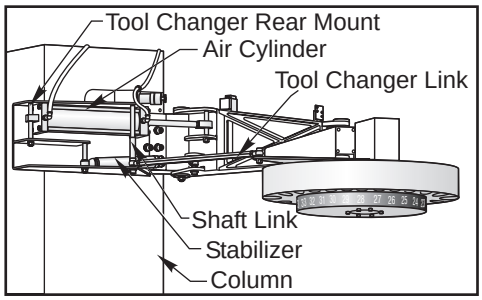


*Tool Changer Assembly.*

4. Hoist the tool changer rear mount into place and mount it with six 1/2"-13 x 1 1/4" SHCS, two 1/2"-13 x 3" SHCS, and two spacers.

5. Carefully swing the tool changer into place. Attach the air cylinder rod with the 5/8"-11 x 7" SHCS. Attach the stabilizer rod with the 1/2 x 5" SHCS.

6. Mount the tool changer link to the rear mount with two 1/2"-13 x 1 1/4" and the shaft link.

7. Connect the air lines (2) at each end of the air cylinder. **IMPORTANT!** The air line from the bottom fitting of the lube/air panel connects to the rear fitting on the air cylinder. The air line from the top fitting of the lube/air panel connects to the front fitting on the air cylinder.

8. Hoist the tool changer enclosure into place, so that it protrudes from the rear of the machine. Attach it with the 18 BHCS. Attach the bracket from the column to the tool changer enclosure with 6 BHCS.

## Tool Changer Alignment (VR Series)

**This procedure will align the tool changer to the spindle in the Y-axis.**

1. Zero Return All Axes. Place cardboard on the table for protection.

2. Place a tool in the spindle. Press the ORIENT SPINDLE key. Ensure there is no tool in the tool changer pocket facing the spindle. Press Emergency Stop.

3. Swing the tool changer into the tool change position by hand. Mark the top of the tool changer link with paint to establish an initial position.

**NOTE:** Ensure the spindle does not spin. When E-Stop is pressed, the spindle is free to rotate, and may lose its orientation.

4. Check the tool changer pocket position in relation to the tool in the spindle. If the tool changer is misaligned in the Y-axis, continue with this procedure. If the tool changer is misaligned in the X-axis, contact the Service Department at Haas Automation.

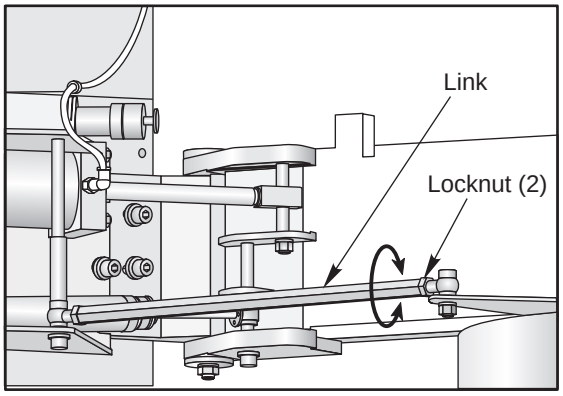


5. Loosen the locknut at each end of the tool changer link. Note that one is a left-hand thread and one is a right-hand thread. Once the locknuts are loose, rotate the link clockwise, and then counterclockwise until resistance is felt in each direction. Rotate the link to the center of the area in which the link turns freely.

6. Tighten the locknuts at each end, while holding the link in place with a wrench.

7. Push the tool changer away from the spindle. Zero Return All Axes, and the tool changer should move back to the HOME (out of the work envelope) position.

8. Run a number of tool changes, and ensure they are performed smoothly. If not, perform this procedure again.

## Outrigger Leveling Procedures

**NOTE:** Not all mills are equipped with outriggers. The standard mill leveling procedures must be completed before starting this section.

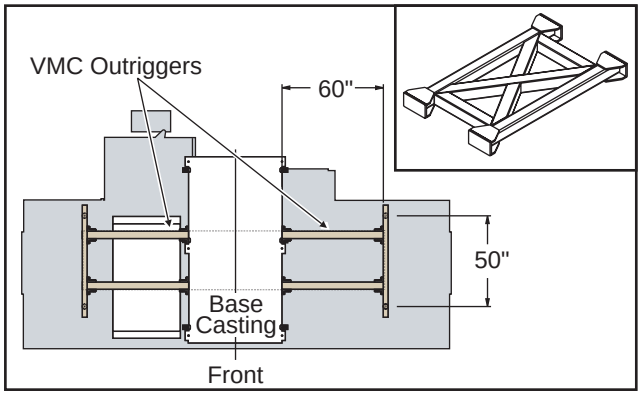


*Outrigger Locations*

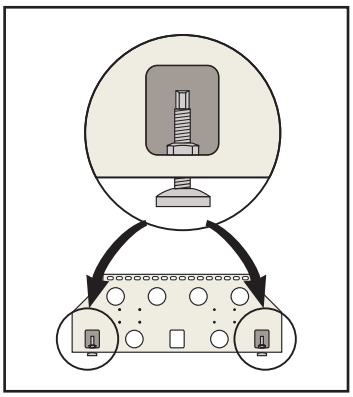

*Outrigger Leveling Screw Locations*

1. Locate the leveling pads underneath the outrigger leveling screws. Grease the dimples and keep the screws at least 1/4" above the pads.

2. Place a level in the center of the table and parallel to the X-axis.

3. Jog the Y-axis back (toward the column) to max travel.

4. Starting from either the left or right of the machine, jog the table to the max X travel and over the rear outrigger leveling screw. **DO NOT MOVE THE LEVEL.**

5. Tighten the leveling screw onto the rear pad, which will raise the table and zero the level. Over-tightening the outrigger leveling screws will result in poor machine performance.

6. Jog the Y-axis forward to max travel and repeat step 5.

7. Jog the X-axis to max travel over the other outrigger, and repeat the leveling process.

8. Check level through full X and Y axes ranges of travel.

## Sheetmetal Support Pads

1. Screw the support pads down to the floor.

2. Turn them an additional 1/4 turn once they have come in contact with the floor. Additional tightening of the pads against the floor may affect the level of the machine.

3. Lock in place with the jam nut.

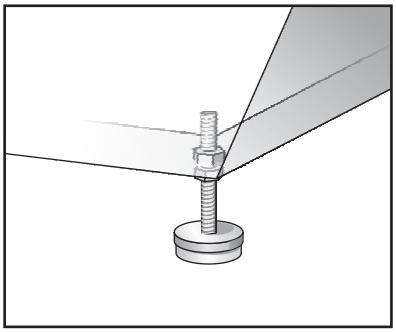

**CAUTION!** To avoid damaging the sheetmetal when moving or shipping the machine, fully retract the support pads.

## Leveling the MDC-500

Leveling of the machine is required to obtain the correct right angle geometry of the machine's X, Y, and Z axes. Incorrect level will result in out-of-round circle milling and incorrect linear interpolation.

Leveling is done in two steps: rough leveling to ensure the machine is level for coolant and oil drainage, and fine leveling for axes' geometry. Finally, the spindle sweep is checked.

**NOTE:** Many factors can affect a machine's ability to remain level — the rigidity of the floor, the stability of the support under the floor, trains or trucks passing nearby, seismic activity, and so on. Therefore, until experience shows how often re-leveling is required, check the machine's level frequently after it is installed.

Use a precision or electronic bubble level with each division equal to 0.0005 inch per 10 inches, or .05 mm per meter, or 10 seconds per division. Before starting, check level accuracy. Set it on the table on the X-axis and record the reading, then turn it 180°. The reading should be the same. If not, the level is out of calibration and should be adjusted before continuing.

Verify the four corner feet are supporting the machine and screw leveling screws at the corners through the base until the it is 3" to 3 1/2" above the floor. Verify the coolant tank slides under the machine base with 1/4" to 1/2" of clearance. That translates into a minimum of 1 3/4" of the leveling screw extending out of the machine base bottom, or one inch between pads and casting. Turn each screw until tension is about the same as the other screws. Screw the jam nuts onto the four (4) leveling screws, but do not tighten them down.

### Verify Column Level

1. Clean the column of the machine and the precision level of all debris.

2. Place the level on the machined surface on top of the column parallel to the Y-axis.

3. Jog the X-axis from one side to the other and note the reading from one end of travel to the other. The maximum allowable deviation is 0.0003".

4. Rotate the level so it is parallel to X-axis. Jog the X-axis from one side to the other and note the reading from one end of travel to the other. The maximum allowable deviation is 0.0003".

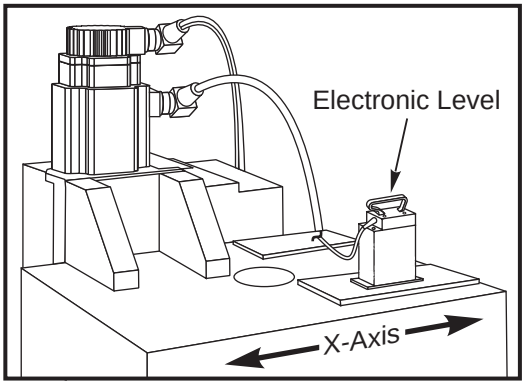


*MDC-500*

### Rough Level

1. Center all machine travels (X, Y, Z).

2. Loosen the right front leveling screw so there is at least 1/4" between the tip of the leveling screw and the leveling pad. The two middle screws should not be touching the floor or the leveling pads.

3. Position the level on the top of the column, parallel to X-axis. Adjust the right-front and right-rear leveling screws until the level reads +/-.0005".

4. Position the level on the top of the column, parallel to Y-axis. Adjust the two front leveling screws to read +/-.0005".

### Fine Level

During fine leveling, place the level on the top of the column and note the position of the bubble. To achieve proper machine geometry, follow the instructions below and adjust the leveling feet as described so there is no perceptible movement of the bubble position.

1. Position the level parallel to the Y-axis. Jog the Y-axis to each end of its travel. If necessary, adjust the front leveling screws evenly.

2. Verify Y-axis roll: Position the level perpendicular to the Y-axis and note the reading, then jog the Y-axis to each end of its travel. If necessary, adjust the right-front or left-front leveling screw.

3. Jog the X-axis to each end of its travel and tighten the middle leveling screws against the leveling pads.

4. Verify X-axis roll: Position the level parallel to the Y-axis and note the reading, then jog the X-axis to each end of its travel.

5. Repeat the axis roll verification as necessary until no roll is perceptible in either the X- or Y-axis.

### Spindle Sweep

Place a **0.0005** test indicator in the spindle and sweep a **10" diameter** circle on the table (see the Machine Inspection Report in the manual for the results of this test at the factory). Grease the dimple in each of the two remaining pads, locate them under the middle leveling screws, and use these screws to compensate for any error. If there is no error, tighten the screws evenly until they contact the pads.

When fine leveling is completed, tighten the jam nuts on the leveling screws.

## Spindle Sweep

**NOTE:** The machine must be properly leveled for the spindle sweep adjustment to be accurate; no more than .0002” twist on the Y-axis (vert mill).

1. To check spindle sweep, place a .0005” indicator on a suitable holder, place on spindle nose and jog the Z-axis in the negative (-) direction enough so that you can adjust the indicator to sweep a 5" radius from the center of X- and Y-axis travel. Slowly jog Z-axis in the negative (-) direction to zero out indicator.

2. Establish a reference point (indicator zero), sweep the three remaining points and record the reading.

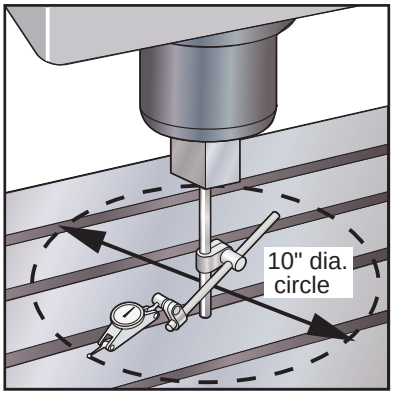


*Spindle Sweep Area*

## Coolant Tank Installation

1. The coolant pump(s) is packed inside the machine enclosure for shipping.

2. Remove the handle from under the coolant tank lid. Remove the packing material and use the supplied hardware to attach the handle to the tank.

**NOTE:** Do not fill the coolant tank before removing the handle from under the lid.

3. Orient the pump(s) and lower into the coolant tank as shown. Place supplied cover as shown. When not using a TSC pump, install a double lid in place of the single lid (see illustration).

4. Position the coolant tank under the left side of the machine.

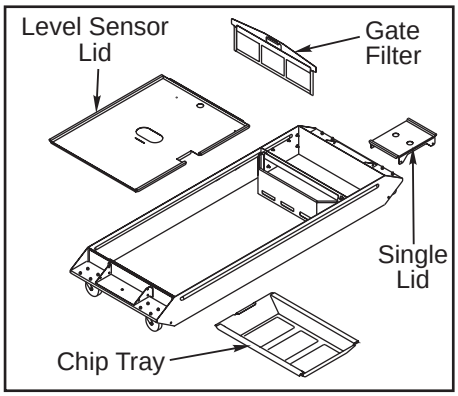


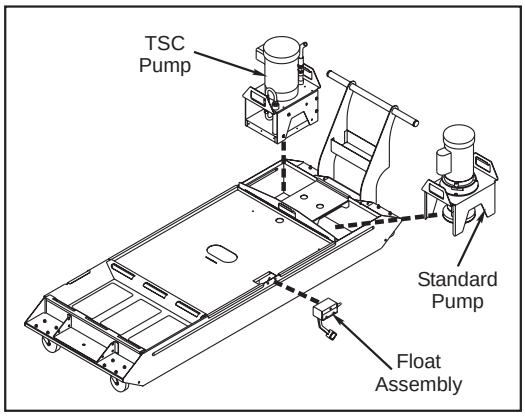


*55-Gallon Coolant Tank Shown*

**NOTE:** It is important that the coolant tank is in place before leveling the machine to ensure adequate clearance between the bottom of the discharge tube and the tank.

5. The Coolant Level Float Assembly is shipped in a separate box. It consists of a housing, float and cable. Install the Coolant Level Float Assembly by lowering the float through the tank lid, line up the slots in the housing with the dimples on the side of the tank and press down so the float assembly clips onto the tank. **95-Gallon coolant tank** - The float can be mounted on either the edge of the coolant tank or the center.

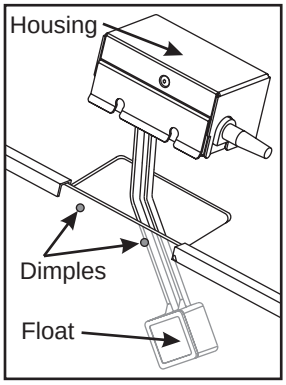


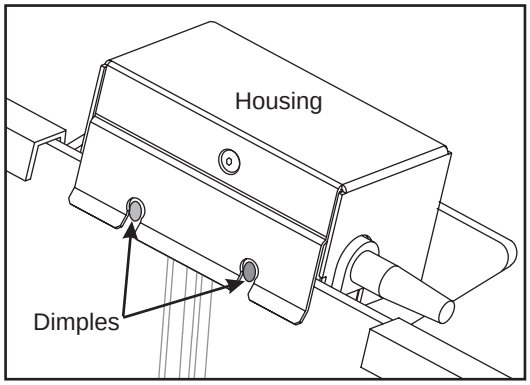


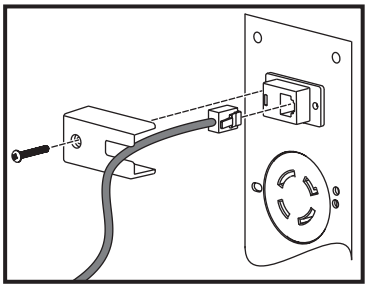

6. Insert a plastic push wire mount into the hole in the tank lid, then route the cable to the coolant pump(s). Tie wrap the coolant float cable to other cables, when available, when routing from the coolant tank.

7. Connect the cable to the Coolant Level Gauge (CLG for VF 1-5 machines) plug. Remove the cover from the RJ-12 style connector, plug in the coolant level sensor cable, and replace the cover. Locations:
   - VF 1-5: CLG on left side of control cabinet.
   - VF 6-11, VR: Sheet metal on lower back of column.
   - VS: Bulkhead on back of X-axis table.
   - MDC: Rear sheet metal below tool changer.

8. Select the Current Commands screen on the operator's pendant and move the float up and down to ensure that the display reflects a corresponding change in the coolant level.

9. Connect the main coolant line (3/4" O.D.) to the standard pump. Connect the standard pump power line to the outlet on the right side of the electrical panel.

10. If machine includes Through the Spindle Coolant option (TSC), attach the 3/4" (for VF/VM Series) or 1/2" (for VR and VS series) O.D. coolant line to the TSC pump.

11. Fill coolant tank with water-based coolant only. **Do not use mineral cutting oils, they will damage rubber components throughout the machine and void the warranty.**

**NOTE:** Before operating the coolant system, ensure the machine drain is positioned halfway over pull out chip tray.

## Oil/Coolant Separator

The oil/coolant separator may be shipped installed or no installed depending on the machine configuration.

If the separator is not in place, install the assembly to the nipple on the base casting. Install the aluminum tube to the fitting on the back of the separator.

Once installed, check the level of the separator (use the built-in bubble level) and tighten the jam nut.

**NOTE:** Never reuse waste oil from the Oil/Coolant Separator; dispose of properly.

## Auxiliary Filter

### Standard Coolant Systems

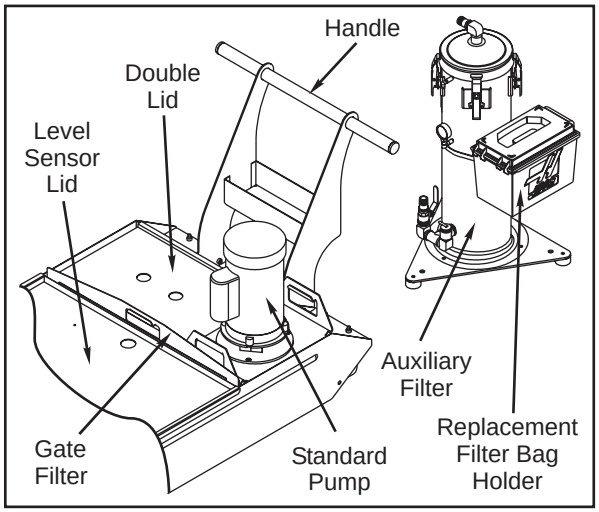


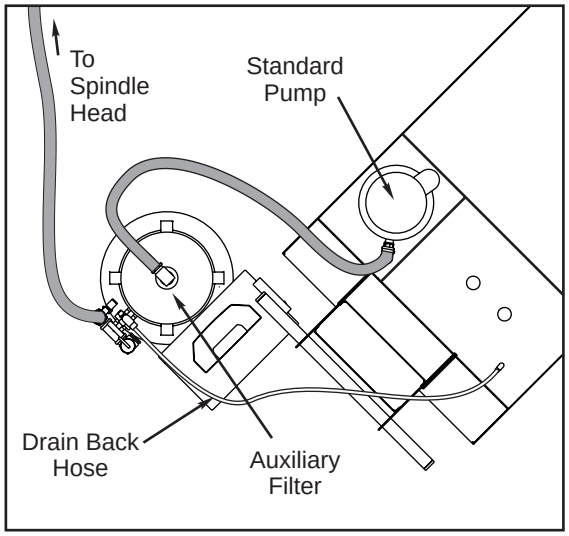


*VF Series Machines Shown*

### Installation

1. Place the Auxiliary Filter system next to the coolant tank of the machine.
2. Connect the output of the Standard Coolant pump to the input of the Auxiliary Filter.
3. Connect the Auxiliary Filter output hose to the coolant hose of the machine.
4. The Auxiliary Filter tank must be filled with coolant before use.

## Optional Auxiliary Filter for TSC300 System

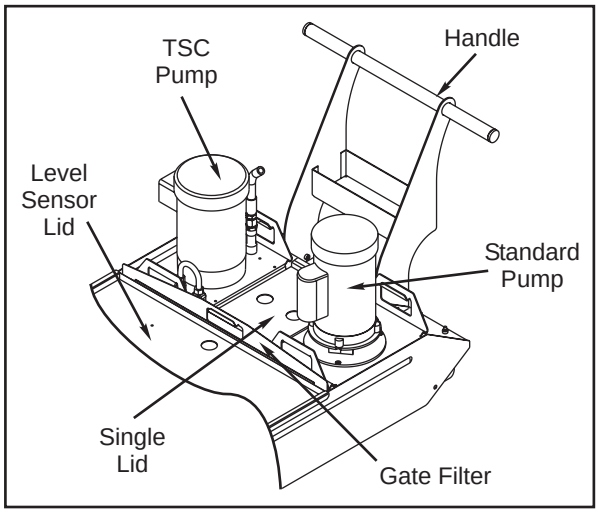


*Standard TSC300 Setup*

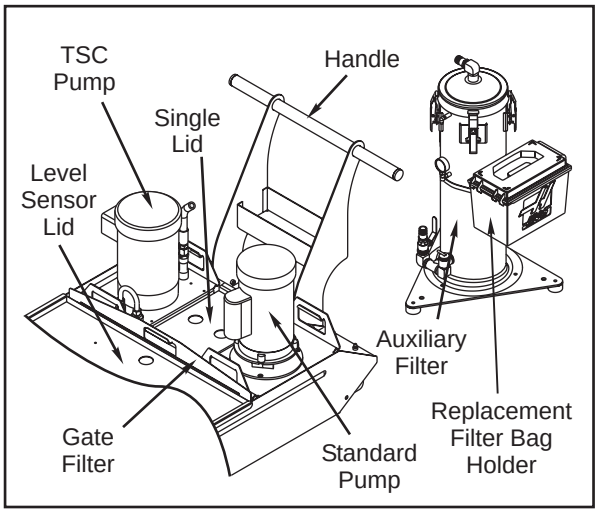


*Optional TSC300 Auxiliary Filter Setup*

## TSC300 System

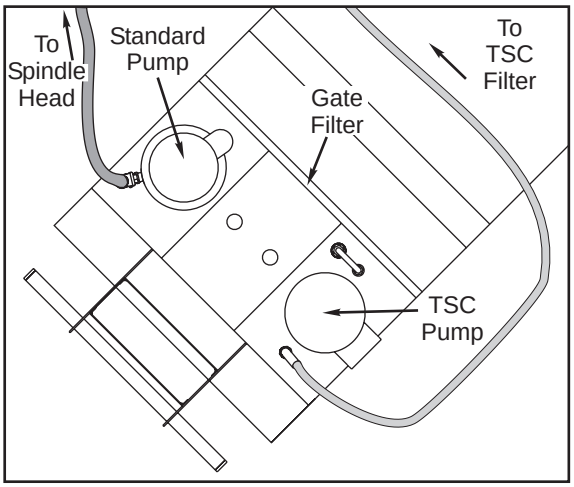


*Standard Filtration Setup*

1. Connect the coolant hose from the machine's head to the hose connection on the Standard Coolant Pump.
2. Connect the hose attached to the TSC Coolant Pump Assembly to the TSC Filter Assembly.

## TSC300 System with Auxiliary Filter

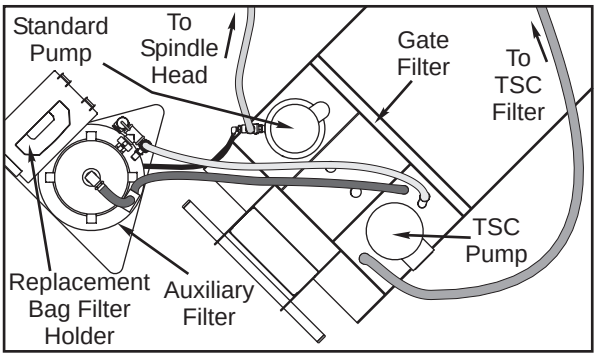

1. Connect the hose attached to the machine's head to the hose connection on the Standard Coolant Pump.

2. Separate the hose coming from the top of the Auxiliary Filter from the hose coming from the bottom. They have been connected together for shipping.

3. Attach Auxiliary Filter male connector (top hose) to female connector on TSC Coolant Pump Assembly.

4. Attach the Auxiliary Filter female connector (bottom hose) to the short hose with the male connector on the TSC Coolant Pump Assembly.

5. Connect the plastic tubing (tied to the Auxiliary Filter) from the small elbow fitting on the top of the Auxiliary Filter to the small elbow fitting on the Standard Coolant Pump hose connector.

6. Connect the hose attached to the TSC Coolant Pump Assembly to the TSC Filter Assembly.

## Chip Auger Installation

1. Unpack the auger and discharge tube.

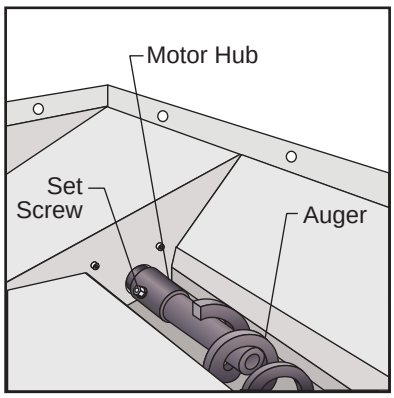


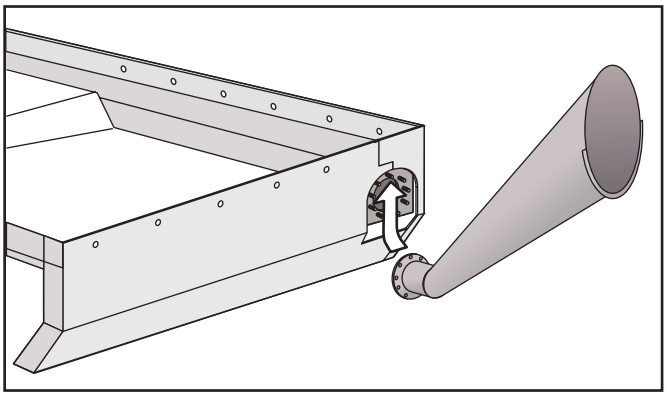

2. Slide the auger into the discharge tube opening and then slip the opposite end onto the motor hub. Fasten it to the motor hub with the 5/16-18 x 2½" bolt.

3. Install the gasket and slide the discharge tube up and onto the studs. Attach the eight nuts with locking washers and tighten uniformly.

4. After machine start-up, check auager operation to ensure the direction of rotation will move the chips toward the discharge tube. If the auger is turning so that the chips are not being moved toward the discharge tube, change the bit switch in "REV CONVEYOR" from 1 to 0 or 0 to 1 to establish a new forward direction.

### VF-1/2 with 95-Gallon Coolant Tank

"Clock" the chip chute in a VF-1 or VF-2 with a 95-gallon coolant tank to accommodate a chip container.

Rotate the chip chute mounting flange one bolt hole toward the front of the machine. Refer to the following illustrations to verify correct orientation. Secure the chute with the provided bolts.

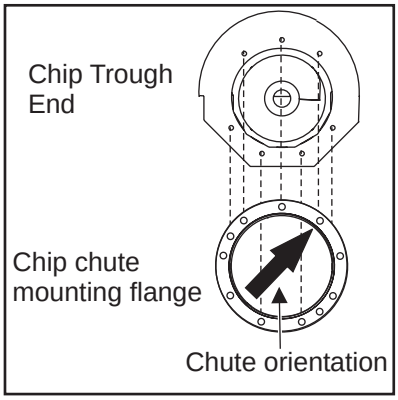


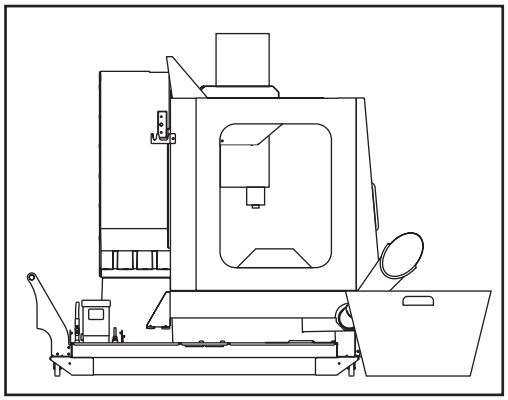

## MDC-500 Chip Conveyor Installation

### Unpacking

1. Inspect the container for damage, open the container, and cut the bands holding the conveyor in place. Install the feet, leaving approximately 4" of thread for proper height.

2. Unfold the conveyor, feeding the belt into the head as the conveyor unfolds. Do not pinch the belt with the conveyor body. Once unfolded, the belt should hang out the end. Install the bolts at the hinge to lock the conveyor body in place.

3. Take slack from conveyor belt until belt hangs about 6" out. Align links and install the link pin. Install washer and cotter pin to lock the pin in position. Set the belt tension adjustment screws to approximately 2 3/4" (70mm). Install conveyor motor and ensure all four of the motor bolts are tight. Install the sheet metal covers.

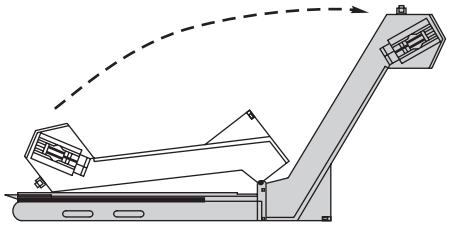

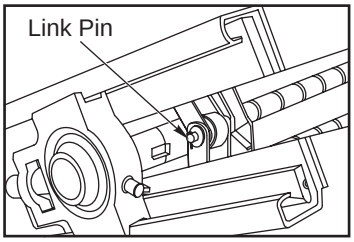


### Installation

1. Remove the conveyor gap covers from the conveyor pickup area inside the machine.

2. Attach a lift to the hoist loops, raise the conveyor and reorient the caster wheels in the operating position.

3. Slide the conveyor into the discharge opening. Adjust caster wheel height to properly support the conveyor. The illustration shows sheet metal and components removed for clarity.

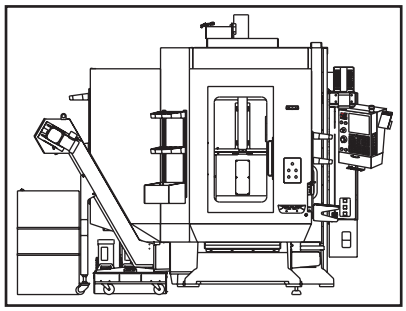

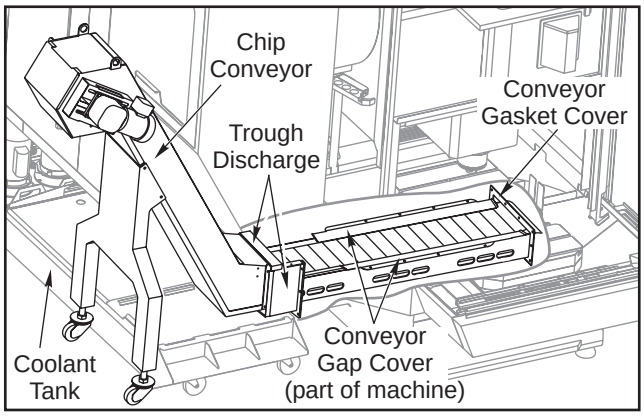


4. Re-install the conveyor gap covers to the conveyor pickup area inside the machine.

5. Install Air Knife into the head of the Chip Conveyor. Use the four supplied flanged button head cap screws to install the air knife in the head of the chip conveyor as shown. Install hose to the fitting on the air knife.

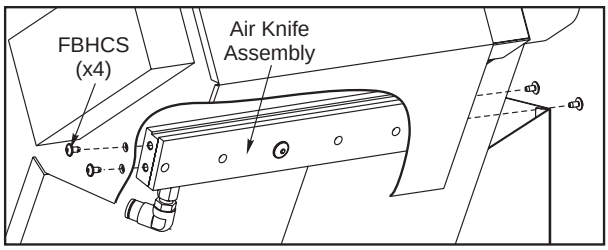


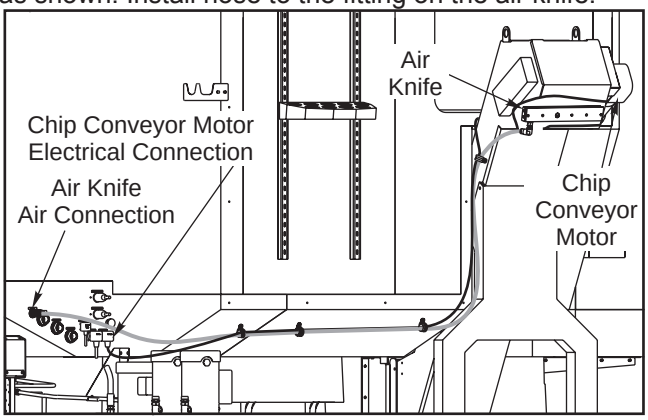


*Chip Conveyor Air and Electrical Connections*

6. Route the chip conveyor motor cable and the air knife air hose along the side on the chip conveyor and along the mill (above the coolant tank) to the sub-panel and connect to the plugs. Insert cable guides in available holes in the sheetmetal for neatness. Do not let the electrical cables droop into the coolant tank.

## Multi-Auger Chip Conveyor (MACC) Setup

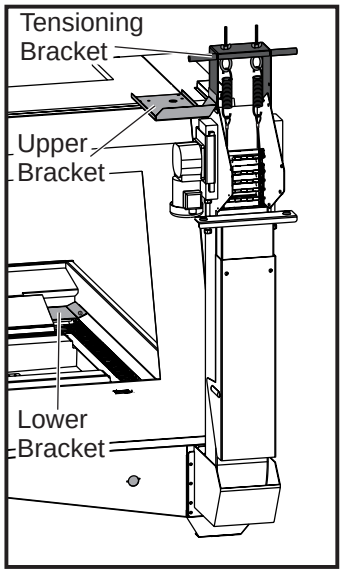


*MACC Shipping Brackets*

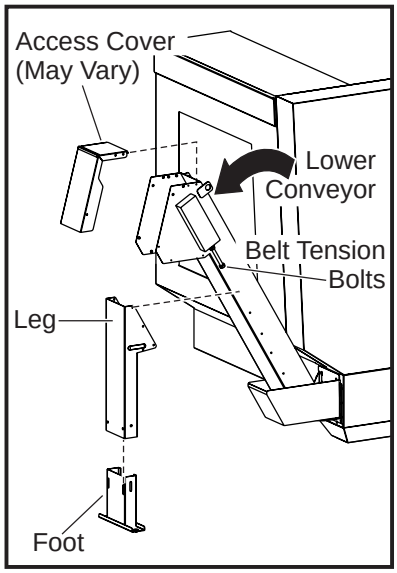


*MACC Assembly*

## Unblocking

Two brackets secure the chip conveyor for shipping: a lower bracket inside the machine enclosure at the end of the conveyor, and an upper bracket on the roof of the machine. There may also be a bracket at the conveyor head that maintains tension on the conveyor belt during shipping.

### Remove the Lower Shipping Bracket

1. Remove the lower bracket connecting the conveyor to the pan inside the machine.
2. Replace the two hex head bolts in the conveyor, using care not to cross thread the rivnuts in the conveyor.

### Remove the Upper Shipping Bracket

1. Support the conveyor while you remove the screws that attach the upper bracket to the enclosure roof.
2. Carefully lower the conveyor into its operating position.
3. Replace the screws in the enclosure roof.

### Remove the Tensioning Bracket (If Installed)

Some conveyor models ship with a tensioning bracket attached to the conveyor head that uses springs to keep the belt under tension in shipping position.

1. Loosen the wing nuts at the top of the bracket to loosen and remove the tensioning springs and cable loops.
2. Remove the tensioning bracket from the conveyor head.

## Adjust Belt Tension Before Operation

Removing the tension bracket causes slack in the conveyor belt. You must adjust the belt tension before operating the conveyor.

1. If the access cover came installed on the conveyor head, remove it (or open the cover if it is hinged).
2. Tighten the belt tensioning bolts at either side of the conveyor head to adjust the belt drive shaft and remove slack from the belt.

   NOTE: Keep the drive shaft perpendicular to belt travel while adjusting the belt.

3. At intervals while you adjust the belt tensioning bolts, inspect belt deflection through the access cover (refer to the belt tensioning decal affixed to the conveyor). Belt tension is correct when deflection is 1/4" to 3/8".
4. Apply the jamnut on each tensioning bolt to lock it in place.

## Completing Setup

All necessary mounting hardware is included with the conveyor, in a box found inside the machine enclosure.

### Install the Conveyor Leg/Foot

If the conveyor leg is not shipped attached to the conveyor, you will find it packed inside the machine enclosure.

The conveyor leg stabilizes the conveyor when it is pulled out of the machine for cleaning. It is not necessary during normal operation.

1. Install the conveyor leg using the top three threaded holes in the sides of the conveyor.
2. Allow the foot to drop to the floor, then install and tighten the screws and nuts to lock the foot in place.

### Install the Access Cover

Depending on the conveyor manufacturer, the conveyor head may have either a hinged or a bolt-on access cover. Use the supplied hardware to install.

### Assemble and Install the Safety Skirt

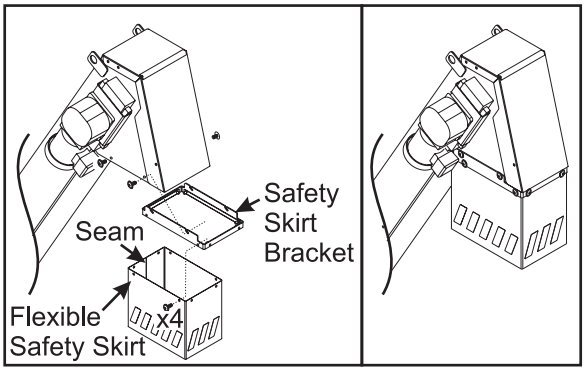


1. Mount the skirt to the bracket. The seam in the skirt faces the conveyor as shown.
2. Mount the bracket to the conveyor.

### Connect Power

Connect the conveyor power twist-lock plug into the receptacle at the side of the machine.

## Switching Conveyor Exit Position

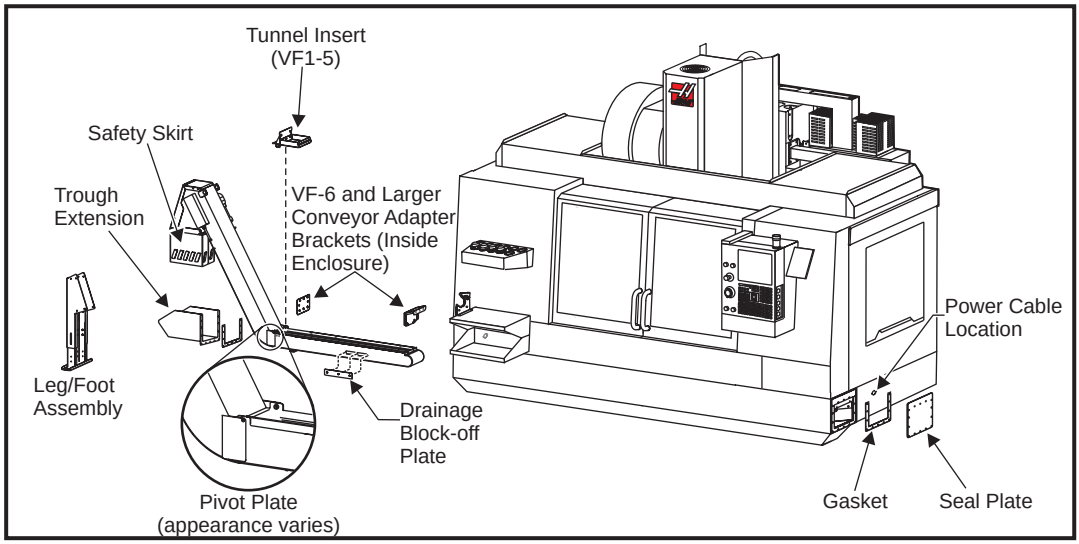


*Multi-Auger Chip Conveyor Exploded View*

Mills equipped with conveyors ship with the conveyor installed so that the lift section of the conveyor exits the machine on the left-hand side. If desired, you can switch the conveyor location to exit on the right-hand side of the enclosure.

NOTE: You will need two new conveyor trough gaskets to complete this procedure. New machines include spares, or order 57-11635 (VF-3/4/5) or 57-0250A (VF-6 and up) if you need replacement gaskets.

### Disassembly

1. If there is coolant in the enclosure base pan and conveyor trough, allow it to drain before beginning this procedure.

2. Disconnect the conveyor power cable from the outlet at the side of the machine.
3. Detach the conveyor power outlet from the machine enclosure and route it to the other side of the machine. Use the same screws to attach the outlet end to the enclosure.
4. Remove the safety skirt assembly f rom the end of the conveyor.
5. Remove the trough extension from the machine enclosure. Use a pan to catch any coolant that remains in the trough. Remove the gasket from the trough extension mounting flange; carefully scrape away any remaining gasket material.
6. Remove the screws from the bracket attaching the conveyor to the outside of the machine enclosure.

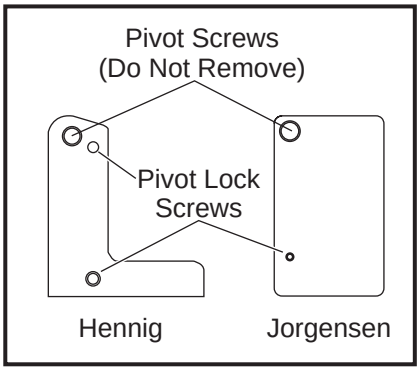


*Pivot Lock Plates*

7. Install 1/4-20 x 1” screws into the pivot plate at the base of the conveyor to lock the conveyor’s lift section in place.
8. Loosen the hex head screws holding the conveyor wings at each side of the conveyor, and let the wings slide inward or remove them.
9. **VF-6 and larger only:** Remove the two brackets at either end of the conveyor that adapt the enclosure interior to the conveyor.
10. Remove the seal plate from the right side of the enclosure at the other end of the conveyor trough. Remove the gasket and scrape away any remaining gasket material from the plate.

## Removing the Conveyor

1. Support the lift section of the conveyor using a suitable lifting device through the eyehooks on the upper casing.
2. Pull the conveyor most of the way out of the machine. Except in VF-6 and larger machines, make sure the tunnel insert (box-shaped part behind the adapter bracket) stays in place.
3. Remove the drainage block-off plate from the side of the conveyor near the end and attach it to the opposite side of the conveyor casing.

NOTE: Failure to move the block-off plate will cause coolant to collect in the machine.

4. Support the other end of the conveyor as it comes out of the machine.
5. Use a mild solvent to clean the trough extension and seal plate gasket surfaces. Install new gaskets to these parts. Trim the trough extension gasket from the open top of the extension.

## Reinstallation and Verification

1. Move the conveyor to the right side of the machine and re-assemble the conveyor assembly and enclosure parts. Make sure of the following:

A. The gaskets are in place on the seal plate and trough extension parts.
B. The conveyor wings are put back in place and secured with the hex head screws.
C. (VF-6 only)The adapter brackets are installed at each end of the conveyor.

2. Install the safety skirt.

3. Make sure the conveyor works correctly, and check for coolant leaks.

## Thin Pendant Installation

### Mill

The Thin Pendant assembly is positioned on top of the mill when shipped. Foam padding is wrapped around the assembly, which is held to the machine with a shipping bracket. The cable cover is slid back toward the rear of the mill and secured with two screws, to provide room for the assembly to rest on top of the mill.

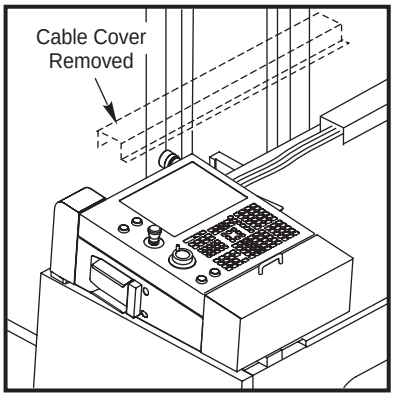


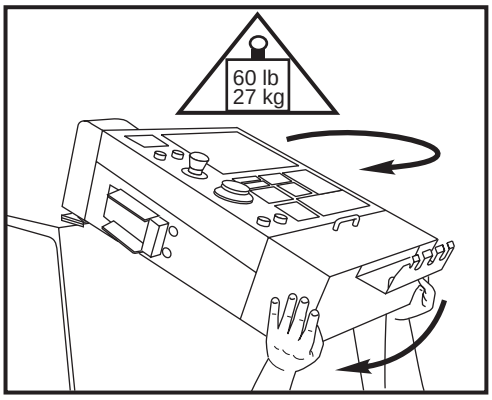


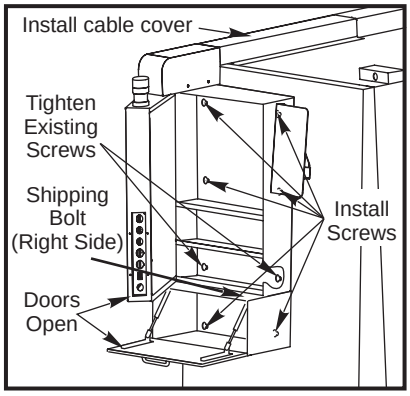


1. Remove the shipping bracket and packing material from the assembly and pivot the Thin Pendant Assembly left and swing it down, allowing cabinet keyholes to locate onto mounting screws on the front panel. Unscrew the cable cover, slide it forward into position, and secure it to the top of the machine.

2. Remove the shipping bolt (accessed through the glove box), open the pendant and install and tighten all fasteners.

## Crane Arm Installation

**NOTE:** The Crane Arm is optional on VF 6-11 machines.

**Important:** Crane Arm is secured to the pallet, under the machine. Do not discard the pallet or packing material until the crane arm has been removed.

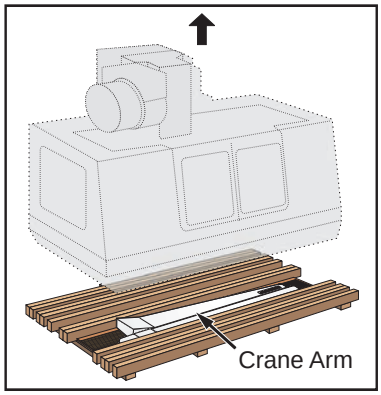


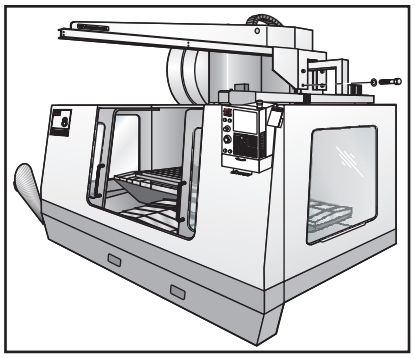

### Installation Procedure

1. Remove the Crane Arm from the shipping base.

2. Lift the Crane Arm into position. There is a hole in the Crane Arm specifically for lifting.

3. Secure the Crane Arm to the right side of the column using the four (4) bolts and washers provided. Make sure all of the cables are guided through the opening on the crane between the mounting bolts. Do not allow them to become pinched between the Crane Arm and the column when mounting.

**NOTE:** The Crane Arm capacity is 1000 lbs, and does not include lift chain device or trolley.

## Through the Spindle Coolant (TSC) System

**Warning!**

**The TSC pump is three phase and must be phased correctly!**
**Improper phasing will damage the TSC pump and void the warranty.**

1. Fill the coolant tank with coolant and connect all hoses and power cords. Zero Return the machine.

2. Press the MDI button and turn on TSC by pressing the AUX CLNT button. Quickly go to the back of the machine and check if the TSC pump motor is turning and pushing coolant through the clear intake hose. If it is, the machine is properly phased. If not immediately stop the pump by pressing the RESET button. Check that the intake hose connection is tight, the connection must be tight for the pump to prime itself. If the motor is not turning, check that the power cords are connected and the circuit breaker inside the control box is on.

The TSC pump will not pump if it is rotating backwards. The motor rotation should be clockwise when viewed from the fan end.

**CAUTION:** Running The TSC pump dry for more than 60 seconds can cause serious damage to the pump.

3. If the machine is improperly phased perform the following procedure:
   a. Turn off the power to the input side (top) of the main circuit breaker. Measure the Voltage!
   b. Exchange any two wires at the input side (top) of the main circuit breaker as shown.
   c. Close the control box. Return to Step 2 and test for proper phasing.

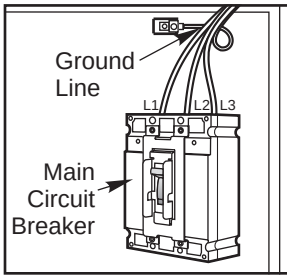


## Optional Auxiliary Filter for TSC System

### Installation

1. Hang the auxiliary filter assembly from the coolant tank handle and secure it with two 1/4-20 screws as shown.

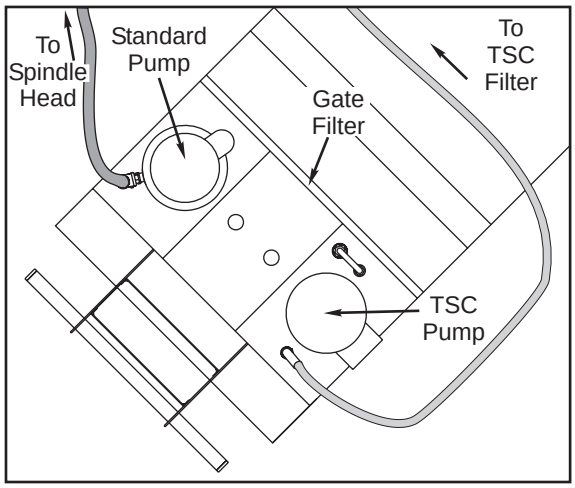


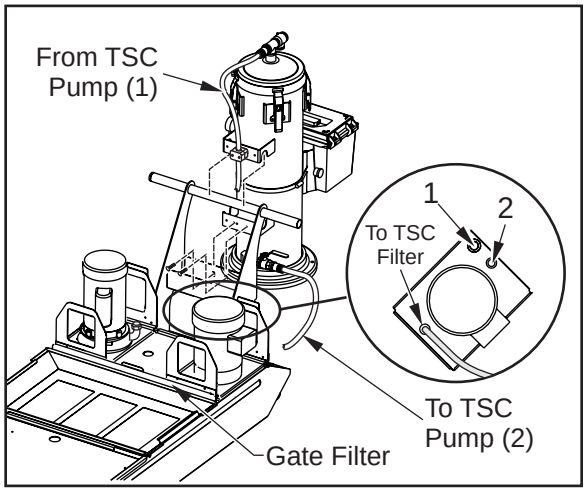


*Standard Filtration Setup*

2. Connect the hose attached to the spindle head to the hose connection on the Standard Coolant Pump.

3. Separate the hoses coming from the Auxiliary Filter. They have been connected together for shipping.

4. Attach the Auxiliary Filter male connector (top hose) to female connector on the TSC Coolant Pump Assembly (Items labeled “1” in the previous illustration).

5. Attach the Auxiliary Filter female connector (bottom hose) to the short hose with the male connector on the TSC Coolant Pump Assembly (Items labeled “2” in the previous illustration).

6. Connect the plastic tubing (shipped tied to the Auxiliary Filter) from the small elbow fitting on the top of the Auxiliary Filter to the small elbow fitting on the Standard Coolant Pump hose connector.

7. Connect the hose attached to the TSC Coolant Pump Assembly to the TSC Filter Assembly.

8. Check that the filter lid is securely closed.

9. Run the primary coolant system for ten minutes to prime the bag filter housing before using the TSC system.

## 1000 Psi Through the Spindle Coolant Installation

Place the 1000psi TSC assembly next to the coolant tank behind the machine with the hose connections facing the back of the machine. Use the following coolant schematic as an aid for hose routing.

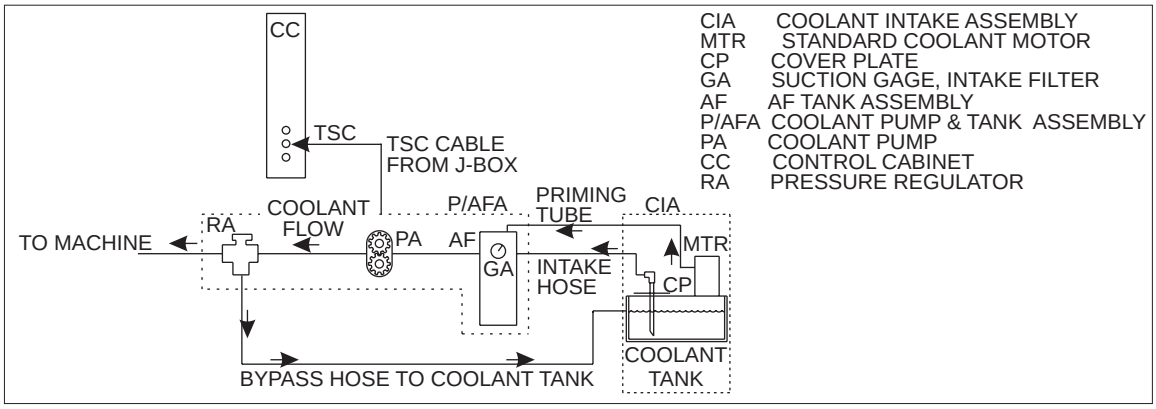


1. Connect the power cable for the pump assembly to an external source in order to power the motor. Note that the CNC control does not provide power to the pump motor. Customer supplied external power must be supplied at the time of installation. The power required is 208-230 volt 3-phase 50/60Hz, and have a 20-amp circuit breaker. The pump assembly is pre-wired with a NEMA L15-20 plug.

The pump assembly can also use an alternate power source, these are:
240-230V 50/60HZ @ 20A or 480V 50/60HZ @ 10A

To power the pump assembly from an alternate source, first replace the plug at the end of the cable with an appropriate plug for the voltage being used. Then, rewire the pump motor according to the directions on the side of the motor.

2. Plug the TSC cable from TSC junction box (J-box) to the TSC amphenol port on the side of the control cabinet.

3. Connect the hose attached to the coolant connection on the spindle head to the hose connection on the Standard Coolant Pump.

4. Connect the hose attached to the TSC input on the machine's head to the connector labeled "1000 psi Out" on the TSC1000 connector panel (located on the side opposite the handle).

5. Attach the supply hose from the coolant tank lid to the connector labeled "Supply In" on the TSC1000 connector panel (items labeled "1" in the following illustration).

6. Connect the filter drain line from the coolant tank lid to the connector labeled "Filter Drain" on the TSC1000 connector panel (items labeled "2" in the following illustration).

7. Connect the plastic tubing (ships tied to the Auxiliary Filter) from the connector labeled "Prime Line" on the TSC1000 connector panel to the small elbow fitting on the Standard Coolant Pump hose connector (items labeled "3" in the following illustration).

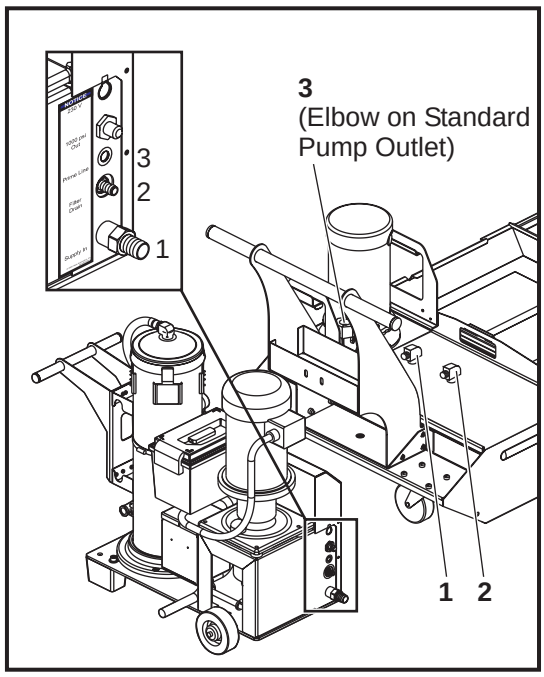


*TSC1000 / HPC1000 Setup*

## Initial Start-Up

Before using the 1000psi system the auxiliary filter must be primed. There are two ways to do this. The first is to run the standard coolant pump for 5 minutes. This will fill the auxiliary tank, through the priming hose.

The second method is to attach the wash down hose to the standard coolant pump. Turn on the standard coolant system (press "MDI", then "Coolant"). It may be necessary to turn the valve(s) on the standard coolant pump to divert coolant to the hose. Open the auxiliary filter tank cover and use the wash down hose to fill the auxiliary filter with coolant. Replace the auxiliary tank cover and tighten securely.

**NOTE:** To ensure the TSC pump does not lose its priming, a 1/4" nylon hose is connected between the standard coolant pump and the auxiliary filter to maintain the coolant level in the filter tank.Pressure Regulator Adjustment

The pressure regulator has been set at 1000psi and tested at the factory. No further adjustment is required. However, to change the pressure, loosen the regulator jam nut. Turn the adjusting bolt clockwise to increase the pressure or counter clockwise to decrease the pressure. (Note, the system does not need to be on to change pressure) Tighten the regulator nut once the pressure has been set.

## Replacement of Filter Bags

Change the filter bag when the filter gauge indicator displays a vacuum level of -5 in. Hg or more. Do not allow the suction to exceed -10 in. Hg or pump damage may occur. HAAS recommends using 25-micron rated filter bags. Replacement bags can be purchased from local filter suppliers or from HAAS (Part No. 93-9130). Finer micron rating bags can be used.

## Maintenance

**Before doing any maintenance to the 1000psi system, disconnect the power source; unplug it from the power supply.**

Check the oil level on a daily basis. If the oil is low, add oil through the fill cap on the reservoir. Fill the reservoir about 25% full with synthetic 5W30 oil.

## Washdown Hose Installation

The Tote Kit supplied contains a Washdown Hose Kit. This includes one Hose, one Nozzle, two (2) Hose Washers, and one “Y” connector. The nozzle should have a washer tied on to the handle.

1. Detach the washer from the nozzle handle, and insert it into the connecting end of the nozzle.
2. Insert one of the hose washers in the female end of the hose. The other washer is a spare.
3. Attach the nozzle to the male end of the hose.
4. Detach the Coolant hose from the coolant pump.
5. Attach the “Y” connector to the coolant pump where the Coolant hose was.
6. Attach the Coolant hose to one of the “Y” outlets and the Washdown hose to the other.

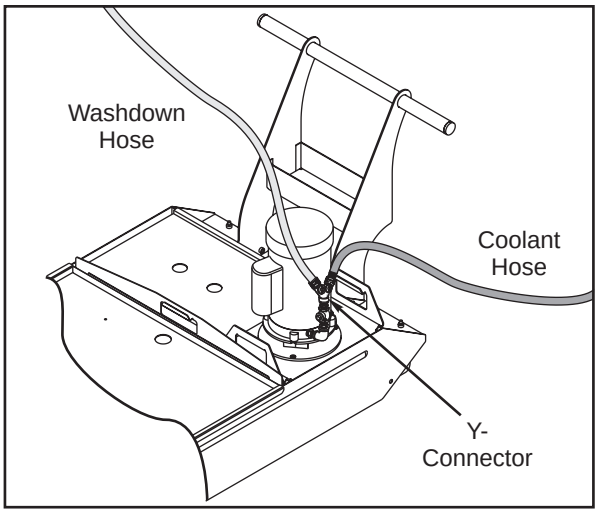


## Spindle Run-in

**CAUTION!** The spindle run-in program must be run before the spindle can be run above 1000 rpm. Failure to run this program can result in spindle over heating and failure.

Before running the spindle, a spindle run-in must be performed. A program has been supplied with the machine which will slowly run the spindle up to speed (approx. 2 hrs). This will purge out any oil which may have settled at the nose of the spindle due to long idle time. The program is # O02021 Spindle Run-In and will be used for all spindle types and rpms. Adjust spindle speed override depending on maximum spindle speed of the machine: Set override at 50% for 5,000 RPM machines; at 100% for 7,500 and 10,000 rpm machines; and at 150% for 15,000 rpm machines. For machines equipped with a 50 taper spindle, run spindle speed override at 50%.

```
N100
S750M3
G04 P600.;
S2500M3;
G04 P600.;
```

```
N1000
S7500M3;
G04 P30.;
S500 M3;
G04 P150.;
```

```
N2000
S10000M3;
G04 P30.;
S500M3;
G04 P150.;
```

```
S5000M3;
G04 P900.;
N200
M97 P1000 L15
M97 P2000 L15
M30;
M99;
M99;
%
```

The HSK 63A Faemat spindle requires a toolholder in the spindle and the chiller to be set at 20°C while the spindle is running.

The spindle should be checked periodically for spindle temperature rise. If the temperature rises above 150°F, start the program from the beginning. If the temperature rises above 150°F again, contact your dealer.

## Spindle Warm-Up Program

All spindles which have been idle for more than 4 days must be thermally cycled prior to operation above 6,000 RPM. This will prevent possible overheating of the spindle due to settling of lubrication. A 20-minute warm-up program has been supplied with the machine, which will bring the spindle up to speed slowly and allow the spindle to thermally stabilize. This program may also be used daily for spindle warm-up prior to high-speed use. The program number is O02020 (Spindle Warm-Up).

```
O02020 (Spindle Warm-Up)
S500M3;
G04 P200.;
S1000M3;
G04 P200.;
S2500M3;
G04 P200.;
S5000M3;
G04 P200.;
S7500M3;
G04 P200.;
S10000M3;
G04 P200.;
M30;
```

## Cable Handling/Storage

Complete the machine installation by looping and storing the extra lengths of electrical cables. Use the following techniques when dealing with excessive cable length.

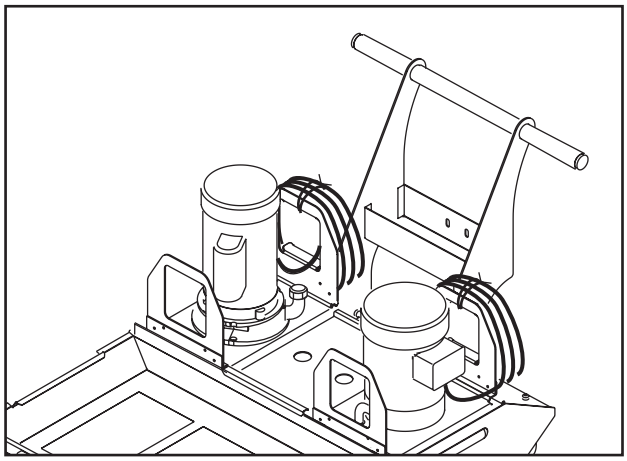

- Loop cables individually, being careful to not force the cable into too sharp a bend and tie-wrap the loop. The cable bend radius should not be less than 4 times the diameter of the cable.
- Place the loop in the cable out of sight, hidden by the machine sheet metal, if possible.
- Do NOT allow the cables to rest on the floor.
- Do NOT coil a cable around another piece of machinery (such as a pump motor).

## Access Window Latch Assembly

The mill is shipped with the handle for both of the side window latches removed.

Assemble the latch as shown in the figure. Note: Do not raise window to assemble handle to latch.

The handle is fastened to the latch with two screws and a nut plate

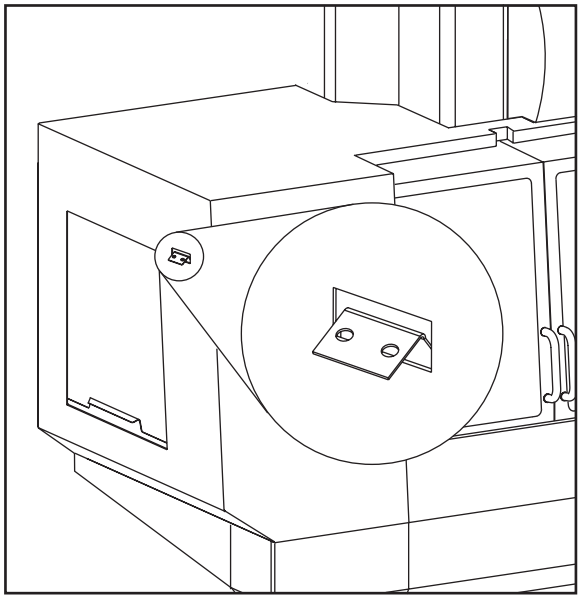

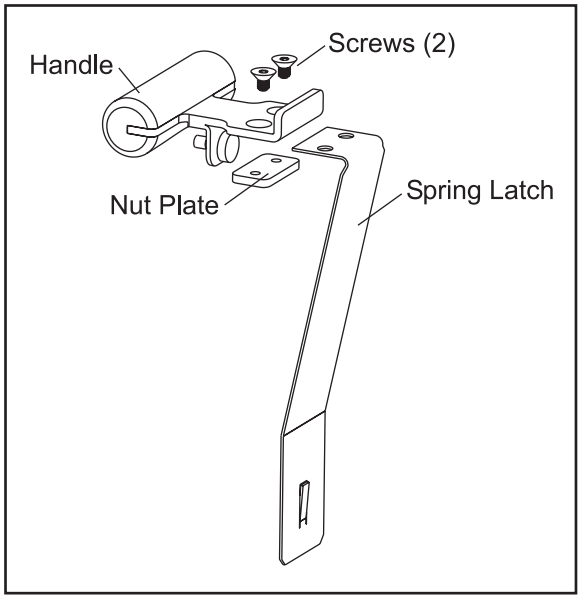


## Work Platform Installation

Large vertical and horizontal mills include work platforms to be installed in front of the machine and secured with chains or by bolting to the floor.


**WARNING: Observe the 450-lb (204 kg) weight limit on the work platform, and understand that this limit includes the weight of the operator(s) standing on the platform and any objects they carry. Overloading the platform can lead to injury.**

## Installation

1. Place the platform in front of the machine, centered between the keyholes in the enclosure and as close as possible to the machine.


2. Push chain links through the top of each keyhole until the last possible link passes through to remove as much slack as possible from the chain.

3. Allow the first link out of the hole to settle into the bottom of the keyhole to engage the chain and secure the platform in place.

## Floor Anchoring (Optional)

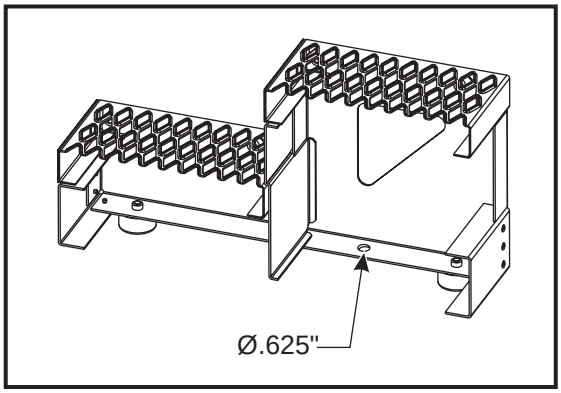


The work platform can also be anchored to the floor.

1. Through the triangular access hole on either side of the platform, check for a Ø.625" hole in the flange on the inside bottom of the higher step. If your platform assembly does not include this hole, drill one in the approximate location shown in the illustration.

2. Use 1/2" concrete lag screws or other anchoring hardware to secure the platform to the floor.

## Machine Requirements

Operating Temperature Range 41°F to 104°F (5 to 40°C)
Storage Temperature Range -4°F to 158°F (-20 to 70°C)
Ambient Humidity: less than 90% relative humidity, non-condensing
Altitude: 0-6000 ft. (Do not operate machine in explosive atmospheres (explosive vapors and /or particulate matter))

## Electricity Requirements

**IMPORTANT! REFER TO LOCAL CODE REQUIREMENTS BEFORE WIRING MACHINES.**

**ALL MACHINES REQUIRE:**

Three phase 50 or 60Hz Delta or Wye power, except that the power source must be grounded (e.g. leg or center leg for Delta, neutral for Wye).
Line voltage that does not fluctuate more than +/-5%.
Frequency range is 47-66 Hz.
Harmonic distortion is not to exceed 10% of the total RMS voltage.

### EC-300,400, 500, 550, 630,1600-3000, ES-5

| | (195-260V) | (354-488V) |
|---|---|---|
| Power Supply[1] | 50AMP 8K spindle<br>100 AMP12K spindle | 25AMP 8K spindle<br>50 AMP 12K spindle |
| Haas Circuit Breaker | 40AMP 8K spindle<br>80 AMP 12K spindle | 20AMP 8K spindle<br>40 AMP 12K spindle |
| If service run from elec.panel is less than 100' use: | 8 GA. WIRE (40 AMP)<br>4 GA. WIRE (80 AMP) | 12 GA. WIRE (20 AMP)<br>8 GA. WIRE (40 AMP) |
| If service run from elec. panel is more than 100' use: | 6 GA. WIRE (40 AMP)<br>2 GA. WIRE (80 AMP) | 10 GA. WIRE (20 AMP)<br>6 GA. WIRE (40 AMP) |

**WARNING!**

A separate earth ground wire of the same conductor size as the input power is required to be connected to the chassis of the machine. This ground wire is required for operator safety and for proper operation. This ground must be supplied from the main plant ground at the service entrance, and should be routed in the same conduit as the input power to the machine. A local cold water pipe or ground rod adjacent to the machine cannot be used for this purpose.

Input power to the machine must be grounded. For wye power, the neutral must be grounded. For delta power, a central leg ground or one leg ground should be used. The machine will not function properly on ungrounded power. (This is not a factor with the External 480V Option)

The rated horsepower of the machine may not be achieved if the imbalance of the incoming voltage is beyond an acceptable limit. The machine may function properly, yet may not deliver the advertised power. This is noticed more often when using phase converters. A phase converter should only be used as a last resort.

The maximum leg-to-leg or leg-to-ground voltage should not exceed 260 volts, or 504 volts for high-voltage machines with the Internal High Voltage Option.

[1] The current requirements shown in the table reflect the circuit breaker size internal to the machine. This breaker has an extremely slow trip time. It may be necessary to increase the size of the external service breaker by 20-25%, as indicated by "power supply", for proper operation.

[2] The high-voltage requirements shown reflect the Internal 400V configuration which is standard on European machines. Domestic and all other users must use the External 480V option.

## Air Requirements

The mill requires a minimum of 100 PSI at 9 scfm at the input to the pressure regulator on the back of the machine. This should be supplied by at least a two horsepower compressor, with a minimum 20-gallon tank, that turns on when the pressure drops to 100 PSI.

Use a 1/2” I.D. hose for the air supply to the machine and set the main Air Regulator to 85psi. EC-400/EC-500/EC-630 Pallet Air regulator is set to 100 psi. (1/2” hose) .

The recommended method of attaching the air hose is to the barb fitting at the back of the machine with a hose clamp. If a quick coupler is desired, use at least a 3/8”.

Excessive oil and water in the air supply will cause the machine to malfunction. The air filter/regulator has an automatic bowl dump that should be empty before starting the machine. This must be checked for proper operation monthly. Also, excessive contaminants in the air line may clog the dump valve and cause oil and/or water to pass into the machine.

**NOTE:** The nipple between the air filter/regulator and the oil lubricator reservoir tank below the control box on the back of the machine is for the optional rotary table (See illustration in “Air Connection” section). DO NOT use this as a connection for an auxiliary air line. Auxiliary connections should be made on the left side of the air filter/regulator.

**WARNING!**

**When the machine is operating and the pressure gauge (on the machine regulator) drops by more than 10 psi during tool changes or pallet changes, insufficient air is being supplied to the machine.**

## Unpacking the Machine

1. Remove the plastic cover.

**CAUTION!** Do not put pressure on the top of the machine as you remove the plastic.

2. Remove the coolant tank from the pallet.

3. Remove the ¾” bolts holding the base to the pallet and the plastic thread protecting sleeve from the base.

4. Remove the nuts, on the leveling screws, holding the shipping bracket to the base casting. Remove the shipping brackets.

5. Lift the machine off the pallet.

### Work Platform

Large horizontal machines (EC-630, 1600, 2000, 3000) include a moveable work platform that can be placed in front of the machine for operator access. The platform is wrapped and attached to the pallet along with the machine. When the machine is in place, set the work platform on its legs in front of the machine

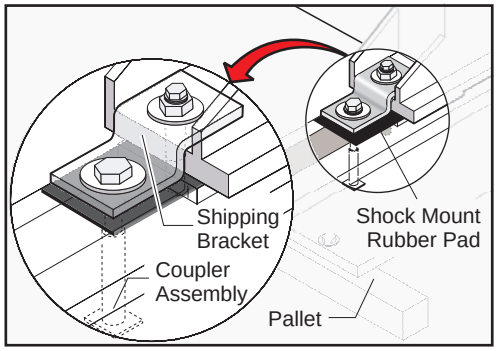


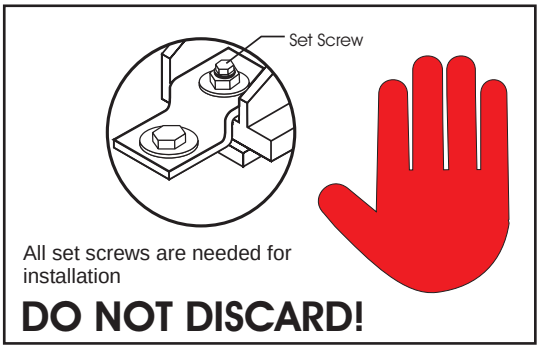


### Tools Required for Installation and Leveling Procedure

Electronic differential level, precision bubble level, calibrated to show 0.0005 inch per 10”
Test indicator (0.0005”)
Two ¾” hex wrenches (one open end or box and one ratchet)
Claw hammer
Forklift: HS- 3-7– Lifting more than 40,000 pounds, with forks at least 8’ long by 6” wide.
EC-300 – Lifting rating more than 10,500 pounds, with forks at least 6’ long by 6” wide.
EC-400 – Lifting rating more than 20,000 pounds, with forks at least 8’ long by 6” wide.
EC-500 – Lifting rating more than 24,000 pounds, with forks at least 8’ long by 6” wide.
EC-630 – Lifting rating more than 62,000 pounds, with forks at least 9’ long by 9’ wide.
EC-1600 – Lifting rating more than 31,500 pounds, with forks at least 8’ long by 6” wide.
EC-2000 – Lifting rating more than 35,500 pounds, with forks at least 8’ long by 6” wide.
EC-3000 – Lifting rating more than 39,900 pounds, with forks at least 8’ long by 6” wide.

## Machine Placement

### Important! Read this section in its entirety before setting the machine in place

**Note**: The EC-1600/2000/3000 must be anchored. Set the anchors before moving the machine into position.

**CAUTION!** Do not lift machine any farther than necessary off floor when moving, and move as slowly and cautiously as possible. Dropping the machine, even from a few inches, can cause injury, result in expensive repairs, and void the warranty.

**WARNING!**

**There must be approximately 6” clearance between the forklift and the side of the machine as the machine is moved.**

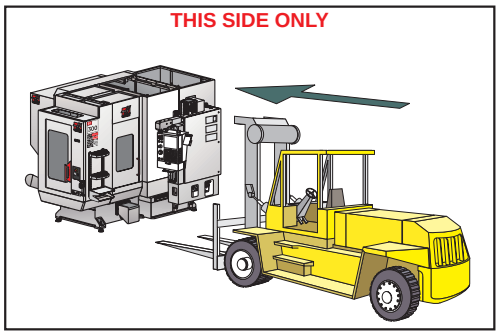


*EC- 300*

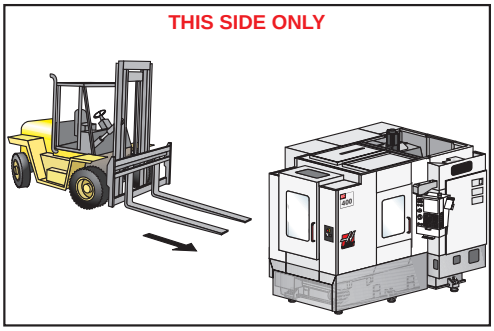


*EC- 400 / EC-500 / EC-630*

The **EC-630** must be lifted on the tool changer side, using a forklift with at least a 62,000 lb. capacity and forks at least 9 feet long, set 9.5 feet apart. When lifting the machine, the centerline between the forks should be 9 feet from the pallet load station side of the machine.

The **EC-1600 – 3000** can be lifted from the rear or on either side (pendant or tool changer) of the machine.

**CAUTION!** Use caution when lifting the machine with a forklift not to damage the sheet metal aprons with the forks.

1. Lift the machine until the retaining bolts clear the pallet. Pull the bolts out of the holes in the machine base. Be sure to remove the plastic bolt covers that the retaining bolts came with.

2. Move the machine to where it will be located. When choosing a location, make sure to allow sufficient clearance between the side of the machine where the coolant tank pulls out and the nearest wall or other obstacle. Refer to the following table for quick reference:

| Machine | Required Clearance for Coolant Tank Removal |
|---|---|
| EC-300/MDC-500/ES-5 | 102" (2589 mm) |
| EC-400/EC-400PP | 112.5" (2856 mm) |
| EC-500 | 126.5" (3213 mm) |
| EC-630 | 78.5" (1994 mm) |

For further details, machine footprints are available from your dealer or on **www.haascnc.com**.

3. Apply grease to the leveling screws and thread each one down until it extends about 1.5” (38.1mm) below the foot casting (two inches for the EC-300). Note: If a screw is excessively hard to turn, remove it, inspect the screw, then retap the hole with a 1”-14 tap. If the screw has dings, dress the threads with a 60° V file.

4. Place a jam nut onto the **bottom** of each leveling screw (between the casting and the floor).

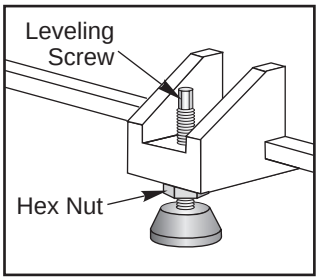


*Jam nut is below the casting*

5. Place the leveling pads from the tote kit on the floor, positioned as shown in the machine footprint.

6. Lower machine onto the leveling pads and adjust the leveling screws so that the coolant tank will fit under the machine, with 1/2” (12.7mm) between the trough lip and the coolant tank. This must be done before the leveling procedure begins.

## EC-3000 Outriggers

EC-3000 outriggers are not attached to the machine, they are secured to the pallet for shipping. Remove the two outriggers from the pallet. Attach an outrigger to each end of the machine, using the supplied fasteners.

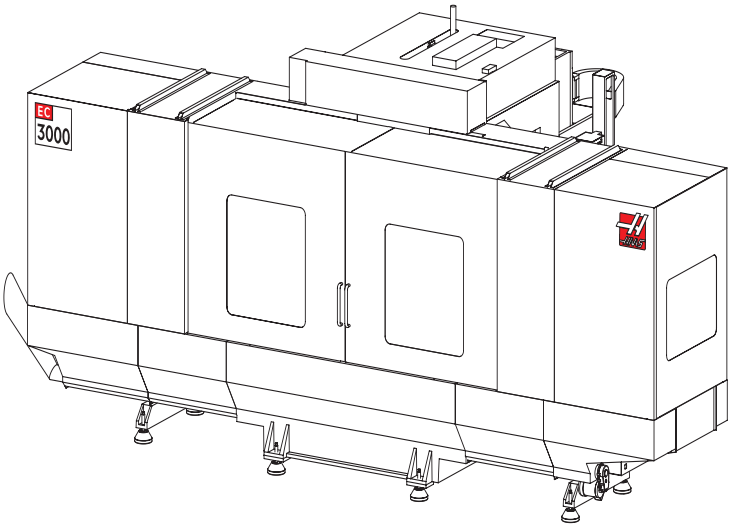


## Unblocking

### Unblocking the EC-300

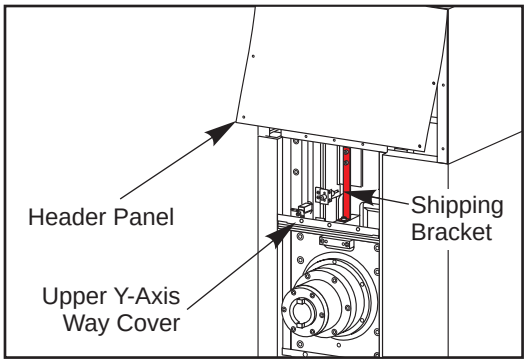


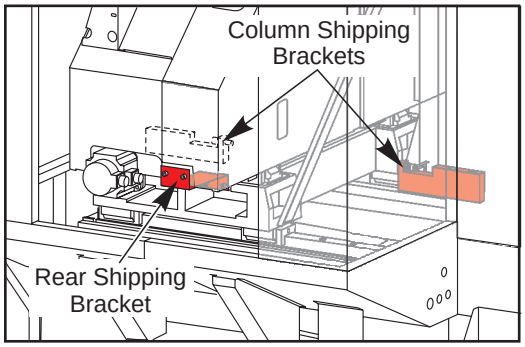


*Machine Shown with Rear Cover Removed*

1. Remove the four screws that hold the shipping bracket to the spindle and saddle castings.

2. Remove the screws that secure the rear panel, remove the rear shipping bracket and the two column shipping brackets (there are three bolts in each one).

3. Remove the 6 screws from the header panel, pull the bottom of the header panel forward to gain access to the way cover screws.

4. Remove the 3 screws from the top of the way cover. The way cover is now loose and can be lowered to the top of the spindle head.

5. Remove the 2 upper and 1 lower shipping bracket screws.

6. Reinstall the way cover and header panel and replace the rear panel.

## Unblocking EC-400 / EC-500

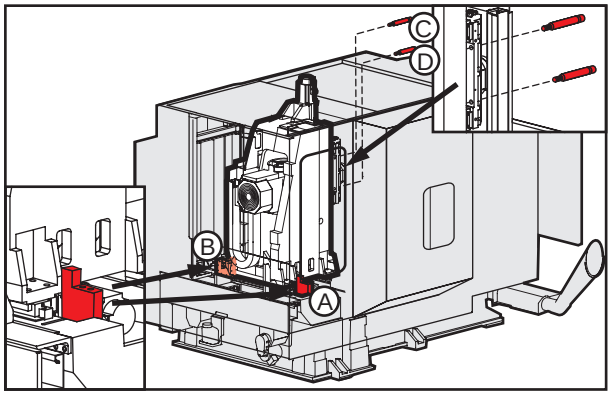


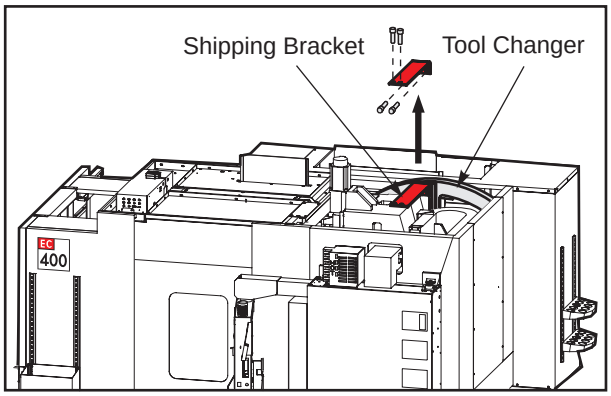


*60-Pocket Tool Changer Shipping Bracket*

1. If equipped with a 60 pocket tool changer, remove the tool changer shipping bracket before moving any axis of the machine. Four bolts which hold the shipping bracket to the top of the column and the tool changer.

2. Remove the rear panel and the panel behind the tool changer. Remove the shipping block (A).

3. Jog the column (jog without zero-return) to the home position (towards the tool changer). This will give access to shipping block (B). Remove this shipping block (B).

4. Handle jog the column to full forward travel in the X-axis (towards the control panel). Enter the enclosure from the rear and remove the spindle shipping pins (C) and (D). Ensure the machine is in E-Stop.

5. Reach in through the operator door and remove the pallet shipping bracket.

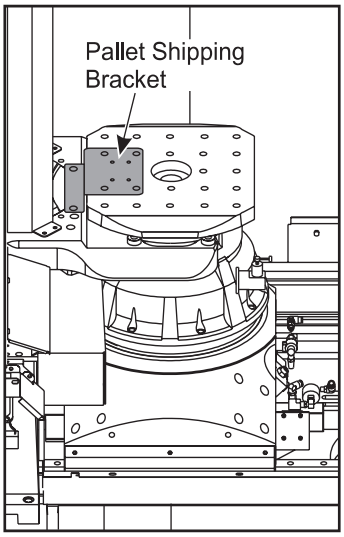


*Step 5*

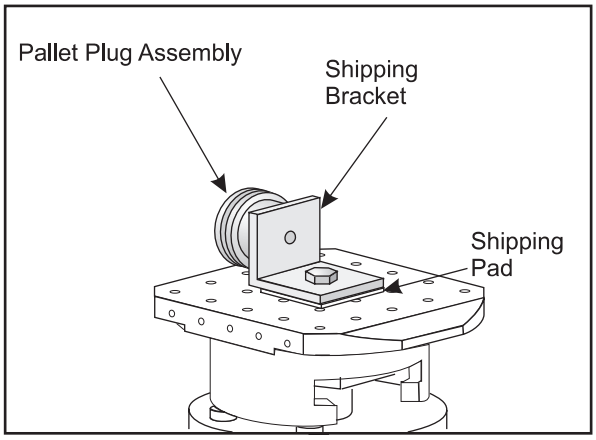


*Step 6*

6. Remove the load station pallet bracket. Remove the pallet plug that is bolted to the bracket. Place the plug in the center hole of the pallet and tap it in place with a mallet.

## Unblocking the ES-5

**X-Axis Shipping Bracket** (located behind the operator side way cover)
1. Remove the eight 10-32 screws and separate the operator side way cover from the table and remove the four X-Axis shipping bracket bolts.

2. Thoroughly clean the table and way cover mating surfaces, apply silicone gasket maker (P/N 99-4452) to the surfaces and refasten the way cover to the table.

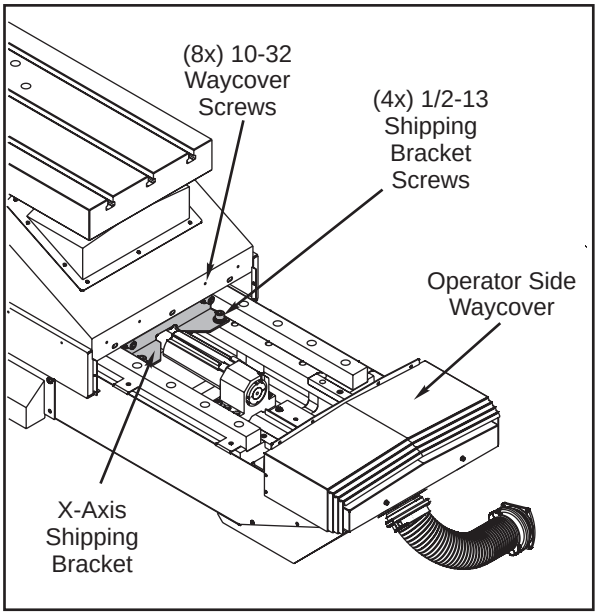


*X-Axis Shipping Bracket (ES-5-4T Shown)*

## Z-Axis Shipping Bracket

1. Remove the rear panel, remove the Z-Axis shipping bracket and replace the rear panel.

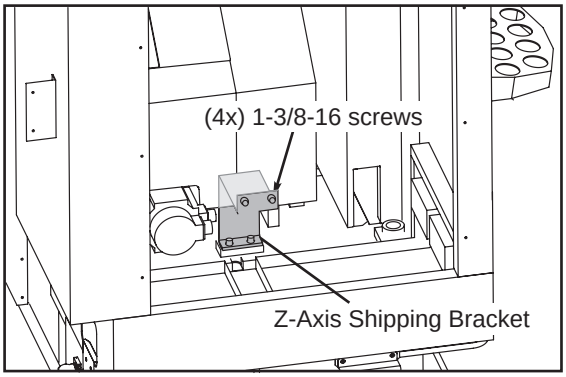


*Z-Axis Shipping Bracket*

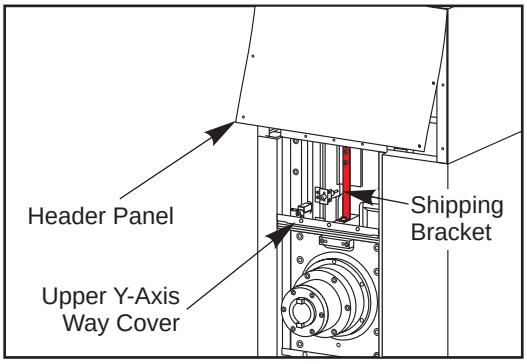


*Y-Axis Shipping Bracket*

## Y-Axis Shipping Bracket

1. Remove the 6 screws from the header panel, pull the bottom of the header panel forward to gain access to the way cover screws.

2. Remove the 3 screws from the top of the way cover. The way cover is now loose and can be lowered to the top of the spindle head.

3. Remove the 2 upper and 1 lower shipping bracket screws and remove the shipping bracket..

4. Reinstall the way cover and header panel and replace the rear panel.

## Pendant Arm Shipping Bracket Removal (EC-300 – EC-500)

1. Remove the pendant shipping bracket, there are three screws holding it in place.

2. Replace the pendant stop; orient it as shown in the illustration. Use the screws removed from the shipping bracket.

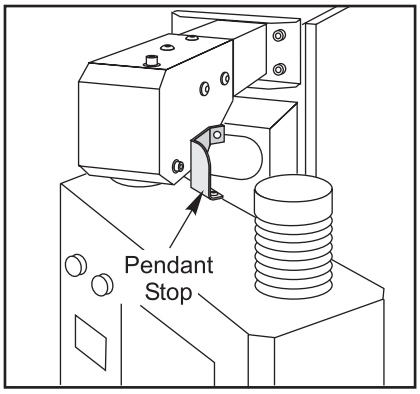


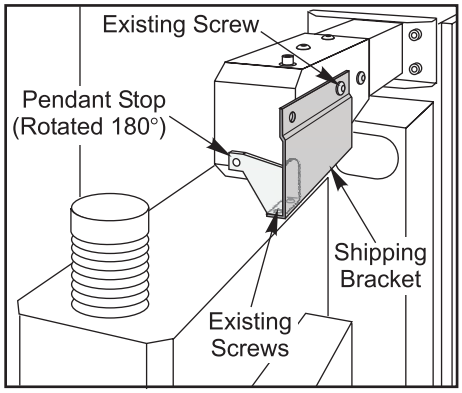


## Unblocking the EC-630 / EC-550

1. Remove all ballscrew cover spacers (20-1114).

2. From behind the column, remove the four column shipping pins (20-3633). See following illustration.

3. Remove the A-axis rotary shipping bracket (25-8348).

4. Remove the blocking bolt from the tool changer shuttle mechanism.

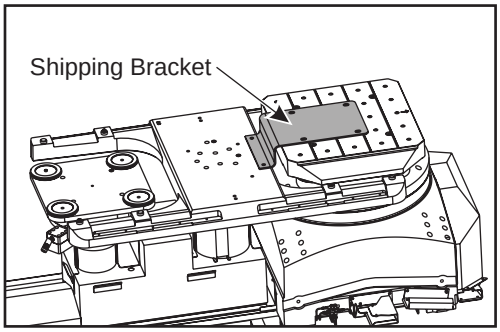


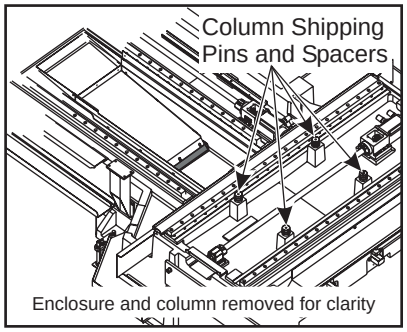


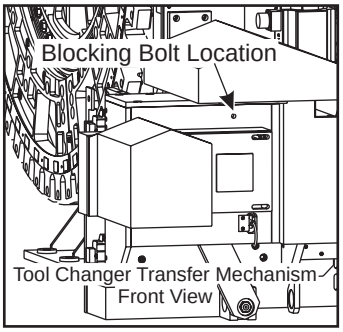


## Unblocking EC-1600 – 3000

1. Remove the X-axis shipping bracket. It is located at the rear of the table.

2. Power up machine and zero return Y-axis. Check counterbalance pressure at the top of Y-axis travel; add nitrogen to bring the pressure back to listed pressure. Note that there are no Y-axis shipping brackets or bolts.

3. Remove the Z-Axis shipping bolts (see figure). They are accessible from the inside of the column casting.

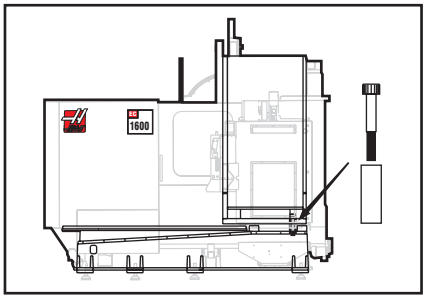

*Z-Axis Shipping Bolts*

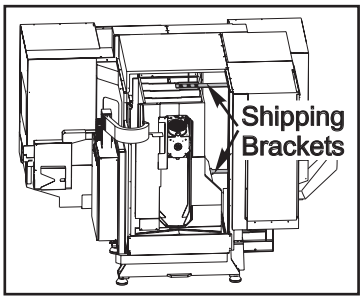


*50-Tool Tool Changer Shipping Brackets*

## 50-Tool Tool Changer Brackets

There are two brackets (upper and lower) that need to be removed before using the machine. **Make sure that the machine is completely turned off before removing the brackets.** To remove the brackets, unscrew the two SHCS that attach each side of each bracket to the tool changer and machine.

## Initial Machine Setup

**WARNING!**

**There should now be NO electrical connection to the machine. The electrical panel should be closed and secured. When the main switch is on, there is high voltage throughout the electrical panel (including the circuit boards and logic circuits) and some components operate at high temperatures. Therefore, you must exercise extreme caution when you are working in the panel.**

1. Set the main switch at the upper right of the electrical panel on the back of the machine to OFF.

2. Using a screwdriver, unlock the two latches on the panel door, unlock cabinet with key, and open the door.

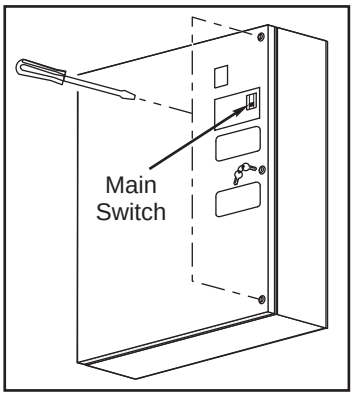


3. Take sufficient time to check all the components and connectors associated with the circuit boards. With the power off, push on them gently to make sure that they are seated in their sockets. Look for any cables that have become disconnected, look for any signs of damage and loose parts in the bottom of the cabinet. If there are any signs that the machine was mishandled, be extremely careful in powering up the machine (be ready to shut it off IMMEDIATELY). If there are obvious problems, call the factory BEFORE proceeding.

### Air Connection

**CAUTION!** Working with the air pressure required for the mill can be hazardous. Make sure that pressure has been removed from the air line before you connect /disconnect it from the machine, or service parts of the air system on the machine.

1. Connect the air blow gun to the air supply fitting on the machine. See the following figures.

2. With the pressure off in the air line, connect the air supply to the fitting next to the air filter/regulator. If the fitting supplied is not compatible, replace it.

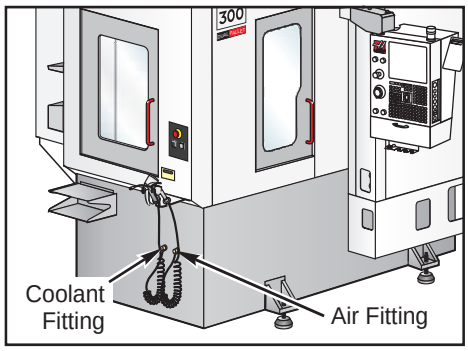


*EC-300*

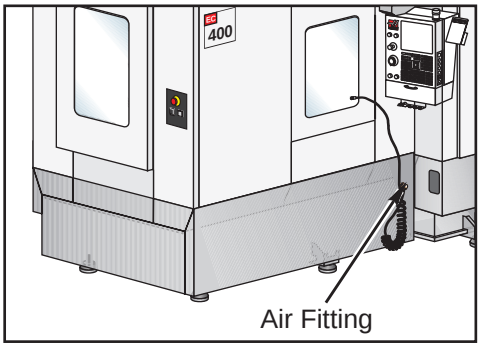


*EC-400*

3. Start the compressor and set it between 100 and 150 PSI. Set the main regulator on the machine to 85 to 90 PSI. * (**EC-400 and EC-630** pallet changer regulator is set to 100psi). Verify the air doubler, at the rear of the machine is set to 40psi on **EC-400s** with a full fourth a xis*.

## Electrical Connections

**NOTE**: The machine must have air pressure at the air gauge, or a “Low Air Pressure” alarm will be present on power up.

**CAUTION!** Working with the electricity required for the mill is extremely hazardous. The electrical power must be off and steps must be taken to ensure that it will not turn on while working with it. In most cases this means turning off a circuit breaker in a panel and then locking the panel door. However, if this is not the case or are not sure how to do this, check with the appropriate personnel and/or obtain the necessary help BEFORE you continue.

**WARNING!**

**Keep the electrical panel closed and the latches on the door secured at all times except during installation and service. At those times, only qualified electricians may access the panel. When the main circuit breaker is on, there is high voltage throughout the electrical panel (including the circuit boards and logic circuits) and some components operate at high temperatures. Therefore, extreme caution is required.**

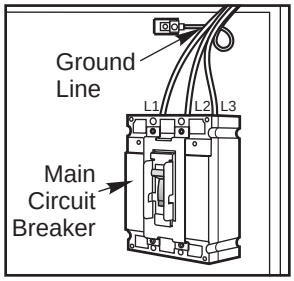


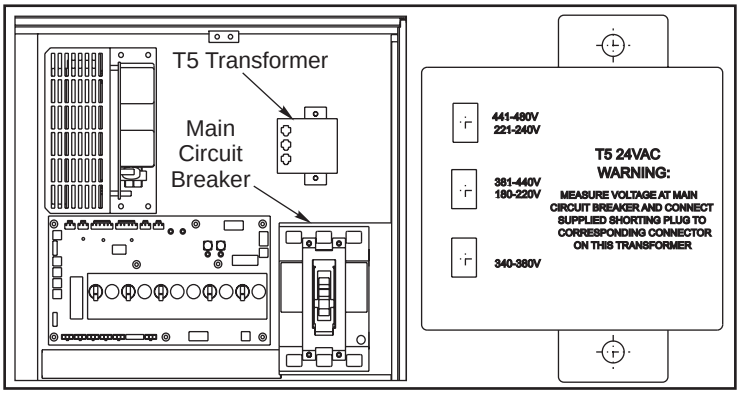


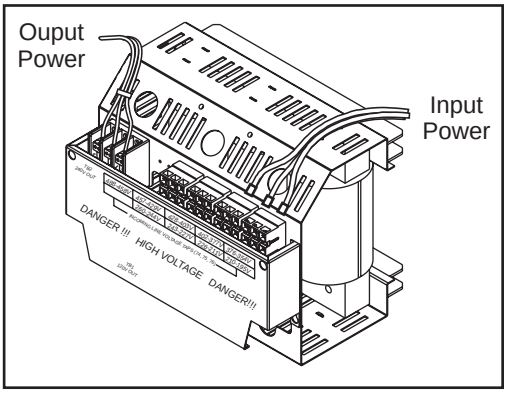


1. Secure the three power lines to the terminals on top of the main circuit breaker at upper right of electrical panel. Connect the separate ground line to the ground bus to the left of the terminals.

**NOTE:** Make sure that the service wires actually go into the terminal-block clamps. (It is easy to miss the clamp and tighten the screw. A poor connection will cause the machine to run intermittently or have other problems, such as servo overloads.) To check, simply pull on the wires after the screws are tightened.

2. After the line voltage is connected to the machine, make sure that main circuit breaker (at top-right of rear cabinet) is OFF. Turn ON the power at the source. Using an accurate digital voltmeter and appropriate safety procedures, measure the voltage between all three pair phases at the main circuit breaker and write down the readings. The voltage must be between 195 and 260 volts (360 and 480 volts for high voltage option).

Wide voltage fluctuations are common in many industrial areas; you need to know the minimum and maximum voltage which will be supplied to the machine while it is in operation. U.S. National Electrical Code specifies that machines should operate with a variation of +5% to -5% around an average supply voltage. If problems with the line voltage occur, or low line voltage is suspected, an external transformer may be required. If you suspect voltage problems, the voltage should be checked every hour or two during a typical day to make sure that it does not fluctuate more than +5% or -5% from an average.

**CAUTION**! Ensure that the main circuit breaker is OFF and the power is off at your supply panel BEFORE you change the transformer connections. Make sure that all three black wires are moved to the correct terminal block and that they are tight.

3. Check the connections on the transformer at the bottom-right corner of the rear cabinet. The three black wires labeled **74, 75,** and **76** must be moved to the terminal block triple which corresponds to the average voltage measured in **step 2** above. There are four positions for the input power for the 260 volt transformer and five positions for the 480 volt transformer. The labels showing the input voltage range for each terminal position are as shown in the previous illustration.

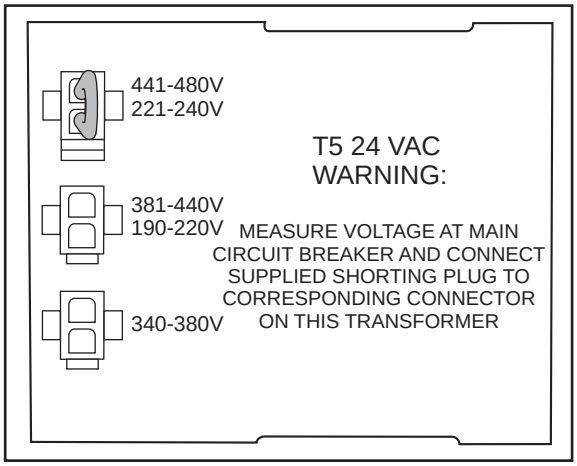


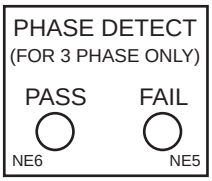


4. Transformer T5 supplies 24VAC used to power the main contactor. There are two versions of this transformer for use on 240 and 400V machines (32-0964B and 32-0965B, respectively). The 240V transformer has two input connectors located about two inches from the transformer, which allow it to be connected to either 240V or 200V. Users that have 220V-240V RMS input power should use the connector labeled 240V, while users with 190-220V input power should used the connector labeled 200V. Users with the External High Voltage Option should use the 240V connector if they have 420V-510V 60Hz power or the 200V connector if they have 50Hz power. Failure to use the correct input connector will result in either overheating of the main contactor or failure to reliably engage the main contactor.

The 480V transformer has three input connectors, labeled 360V, 400V and 480V. Users with 340-380V 50Hz power should use the 240V connector while users with 380-440V 50Hz power should use the 400V connector. The 480V connector is not currently used.

5. Set the main circuit breaker to ON. Check for evidence of problems, such as the smell of overheating components or smoke. If such problems are indicated, set the main circuit breaker to OFF immediately and call the factory before proceeding.

Electrical power must be phased properly to avoid damage to your equipment. The Power Supply Assembly PC board incorporates a “Phase Detect” circuit with neon indicators. When the orange neon is lit (NE5), the phasing is incorrect. If the green neon is lit (NE6), the phasing is correct. If both neon indicators are lit, you have a loose wire; check the connections. Adjust phasing by swapping L1 and L2 of the incoming power lines at the main circuit breaker.

Through the Spindle Coolant (TSC) pump is three phase and must be phased correctly. Improper phasing will cause damage to the TSC pump and void the warranty. Refer to the TSC start up section if your machine is equipped with TSC.

6. After the power is on, measure the voltage across the bottom terminals on the main circuit breaker. It should be the same as the measurements where the input power connects to the main circuit breaker. If there are any problems, check the wiring.

7. Apply power to the control by pressing the Power-On switch on the front panel. Check the high voltage buss on the Vector Drive (pin 2 with respect to pin 3 on the terminal bus at the bottom of the drive). It must be between 310 and 360 volts. If the voltage is outside these limits, turn off the power and recheck steps 2 and 3. If the voltage is still outside these limits, call the factory. Next, check the DC voltage displayed in the second page of the Diagnostic data on the display. It is labeled DC BUS. Verify that the displayed voltage matches the voltage measured at pins 2 and 3 of the Vector Drive +/- 7 VDC.

If the displayed voltage exceeds the measured voltage by 12 volts or more, install a ferrite EMI filter (65-1452) to the current command cable near its connection to the vector drive. Secure with a cable tie (See photo). Recheck voltage.

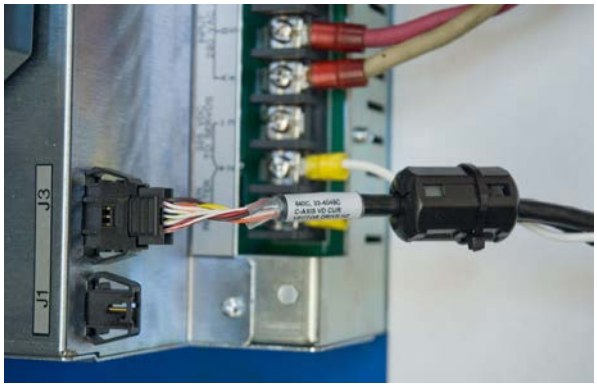


8. Close the door, lock the latches, and turn the power back on.

9. Remove the key from the control cabinet and give it to the shop manager.

## Installation Procedure for External 480V Transformer

### Introduction

The external transformer adds to overall machine reliability and performance, however it does require extra wiring and a place to locate it. The external transformer provides electrostatically shielded isolation. This type of transformer acts to isolate all common mode line transients and improve EMI conducted emissions.

The external transformer has a 45 KVA rating. It is a 480V 60Hz only transformer.

### Installation

The transformer should be located as close to the machine as possible. The input and output wiring of the transformer should conform to local electrical codes and should be performed by a licensed electrician. The following is for guidance only, and should not be construed to alter the requirements of local regulations.

The input wire should not be smaller than the 6AWG for the 45KVA transformer. Cable runs longer than 100” will require at least one size larger wire. The output wire size should be 4 AWG.

The transformer is 480V to 240V isolation transformers with delta wound primary and secondary windings. The primary windings offer 7 tap positions, 2 above and 4 below the nominal input voltage of 480V.

The primary side should be wired as follows:

| Input Voltage Range | Tap |
|---|---|
| 493-510 | 1 (504) |
| 481-492 | 2 (492) |
| 469-480 | 3 (480) |
| 457-468 | 4 (468) |
| 445-456 | 5 (456) |
| 433-444 | 6 (444) |
| 420-432 | 7 (432) |

This should produce a voltage on the secondary side of 234-243 V RMS L-L. Verify this and readjust the taps as required. At the machine, connect the cables at the input of the internal 240V transformer to the 227-243V taps. Apply power to the machine and verify that the DC voltage between pins 2 and 3 of the Vector Drive (2nd and 3rd pins from the left) is 329-345VDC. If not, return to the 480V isolation transformer and readjust the taps as required. Do not use the taps on the internal 240V transformer to adjust the voltage.

### 50Hz Installations

The external transformers are 60Hz rated, and cannot be used at 50Hz without derating the input voltage. For these applications, the internal 240V transformer should be tapped on the lowest setting (195-210V RMS). The external transformer should be tapped according to the following table. If these tap settings do not produce a DC bus voltage between pins 2 and 3 on the Vector Drive between 320 and 345VDC, readjust the taps on the external transformer as required. Do not move the taps on the internal transformer from the lowest position.

| Input Voltage Range | Tap | Input Voltage Range | Tap |
|---|---|---|---|
| 423-440 | 1 (504) | 381-390 | 5 (456) |
| 412-422 | 2 (492) | 371-380 | 6 (444) |
| 401-411 | 3 (480) | 355-370 | 7 (432) |
| 391-400 | 4 (468) | | |

## Leveling

Leveling of the machine is required to obtain the correct right angle geometry of the X, Y, and Z axes. Incorrect level will result in out-of-round circle milling and incorrect linear interpolation.

Leveling is done in two steps: **rough leveling** to ensure the machine is level for coolant and oil drainage, and **fine leveling** for axes geometry. Finally, the spindle sweep is checked.

**NOTE:** Many factors can affect a machine's ability to remain level — the rigidity of the floor, the stability of the support under the floor, trains or trucks passing nearby, seismic activity, and so on. Therefore, until experience shows how often re-leveling is required, check the machine's level frequently after it is installed.

**NOTE:** Measurement of required tolerances in the leveling procedure requires the use of an precision or electronic level.

Use a precision or electronic level with each division equal to **0.0005** inch per **10** inches, or **.05** mm per meter, or **10** seconds per division. Before starting, check the accuracy of the level. Set it on the table on the X-axis and record the reading, then turn it **180**˚. The reading should be the same. If it is not, the level is out of calibration and should be adjusted before continuing.

## Leveling the EC-300 / ES-5

Verify that the four corner feet are supporting the machine and screw the four leveling screws at the corners through the base until the base is 3” to 3 1/2” above the floor.

Verify that the coolant tank slides under the machine base with 1/4” to 1/2” of clearance. That translates into a minimum of 1-3/4” of the leveling screw extending out of the bottom of the base of the machine, or one inch between the pads and the casting. Turn each screw until the tension is about the same as the tension on the other screws. Screw the jam nuts onto the four (4) leveling screws, but do not tighten them down.

### Verify Column Level

1. Clean the machined surface at the top of the column and level of debris.

2. Place the level on the machined surface on top of column parallel to the Z-axis.

3. Jog the X-axis from one side to the other and note the reading from one end of travel to the other. The maximum allowable deviation is 0.0003”.

4. Rotate the level so it is parallel to X-axis. Jog the X-axis from one side to the other and note the reading from one end of travel to the other. The maximum allowable deviation is 0.0005”.

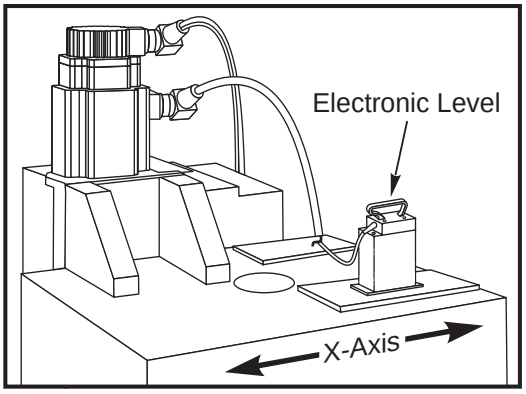


*EC-300*

### Rough Level

1. Center all the machine travels (X, Y, Z).

2. Place the level on the top of the column, parallel to Z-Axis. Adjust the two front leveling screws until level reads +/-.0005”.

3. Rotate the level until it is parallel to X-Axis. Adjust the right-front and right-rear leveling screws until the level reads +/-.0005”.

### Fine Level

During fine leveling, place the level on top of the column and note the position of the bubble. To achieve proper machine geometry, follow the instructions below and adjust the leveling feet as described so that there is no perceptible movement of the bubble position.

1. Position the level parallel to the Z-axis. Jog the Z-axis to each end of its travel. If necessary, adjust the front leveling screws evenly.

2. Verify Z-axis roll: Position the level perpendicular to the Z-axis and note the reading, then jog the Z-axis to each end of its travel. If necessary, adjust the right-front or left-front leveling screw.

3. Jog the X-axis to each end of its travel and tighten the middle leveling screws against the leveling pads.

4. Verify X-axis roll: Position the level parallel to the Z-axis and note the reading, then jog the X-axis to each end of its travel.

5. Repeat the axis roll verification as necessary until no roll is perceptible in either the X- or Z-axis.

### Pitch

1. Tighten the middle leveling screws until they are just touching the leveling pads (very light pressure).

2. Position the level parallel to the Z-axis and note the reading. Jog the Z-axis to each end of its travel. Adjust the middle screws **only** until a maximum pitch deviation is .0005”/10” over full travel.

3. Turn the level 90 degrees and verify that pitch changes have not introduced too much roll deviation in the Z-axis. Adjust the two middle screws only to fix any excess roll deviation. Adjust the two screws together by equal amounts (one up one down) to fix the roll without affecting the pitch.

### Spindle Sweep

Place a **0.0005** test indicator in the spindle and sweep a **10” diameter** circle on the table (see the Machine Inspection Report in the manual for the results of this test at the factory). Grease the dimple in each of the two remaining pads, locate them under the middle leveling screws, and use these screws to compensate for any error. If there is no error, tighten the screws evenly until they contact the pads.

When fine leveling is completed, tighten the jam nuts on the leveling screws.

## Leveling the EC-400/500/630

Verify that the four corner feet are supporting the machine and screw the four leveling screws at the corners through the base until the base is 3” to 3 1/2” above the floor.

**NOTE:** **EC-630** requires 5” of clearance above the floor, as well as 78.5” of clearance between the end of the chip conveyor and the nearest wall when installed, to allow for coolant tank removal.

Verify that the coolant tank slides under the machine base with 1/4” to 1/2” of clearance. That translates into a minimum of 1 3/4” of the leveling screw extending out of the bottom of the base of the machine, or one inch between the pads and the casting. Turn each screw until the tension is about the same as the tension on the other screws. Screw the jam nuts onto the four (4) leveling screws, but do not tighten them down.

### Rough Level

1. Clean the Z-axis pallet and level of debris. Center the column on the X-axis and the pallet on the Z-axis.

2. Loosen the right-front leveling screw so there is at least 1/4” between the tip of the leveling screw and the leveling pad. The two middle screws should not be touching the floor or the leveling pads.

3. Place the level on the center of the pallet parallel to the X-axis. Adjust the left-rear leveling screw until the level reads +/-.0005”.

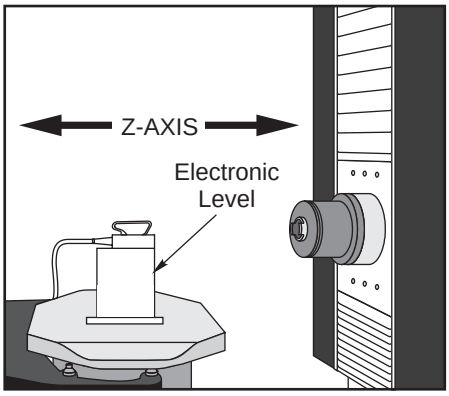


*EC-400*

4. Position the level on center of the pallet, parallel to the Z-axis. Adjust the left-front leveling screw to read +/-.0005”.

### Fine Leveling

1. Jog pallet (Z-axis) to back of machine. Position the level on the center of the pallet parallel to the X-axis.

2. Adjust the left-rear leveling screw until a reading of +/-.0002” is achieved. Note the level’s reading.

3. Jog the pallet (Z-axis) to the front of the machine. Adjust the right-front leveling screw so that readings at both the front and back of the machine are within +/-.0005” of each other.

### Spindle Sweep

Place a **0.0005** test indicator in the spindle and sweep a **10” diameter** circle on the table (see the Machine Inspection Report in the manual for the results of this test at the factory). Grease the dimple in each of the two remaining pads, locate them under the middle leveling screws, and use these screws to compensate for any error. If there is no error, tighten the screws evenly until they contact the pads.

When fine leveling is completed, tighten the jam nuts on the leveling screws.

## Leveling the EC-1600 / 2000 / 3000

**NOTE:** Anchoring of the EC-1600 is highly recommended if large, heavy, or tall parts are machined, or if the foundation is suspect.

The leveling includes fine leveling and pursuant geometry checks. The following tools are required to perform this operation:

- .0005” bubble level
- 50T split tool/T-2089 for CT50, T-2088 for BT50
- 24” granite parallel
- Large magnetic indicator base
- .0005” caliper
- .0005” indicator
- 50T spindle lock tool/T-2080
- 24” granite square
- 1-2-3 blocks

The machines are leveled at the factory, using an electronic level. If not available, use a precision bubble level with each division equal to **0.0005** inch per **10** inches, or **.05** mm per meter, or **10** seconds per division. Before starting, check the accuracy of your level. Set it on the table on the X-axis and record the reading. Then turn it **180**˚ and the reading should be the same. If it is not, the level is out of calibration and should be adjusted before you continue.

Screw all leveling screws through the base until the base is 4” above the floor (3” pad height + 1” of screw extending from bottom of base). Do not screw leveling screws #3, 4, 5, & 6 (and X-axis outrigger leveling screws on the EC-3000) down on leveling pads at this point. Screw the jam nuts onto all leveling screws, but do not tighten them down.

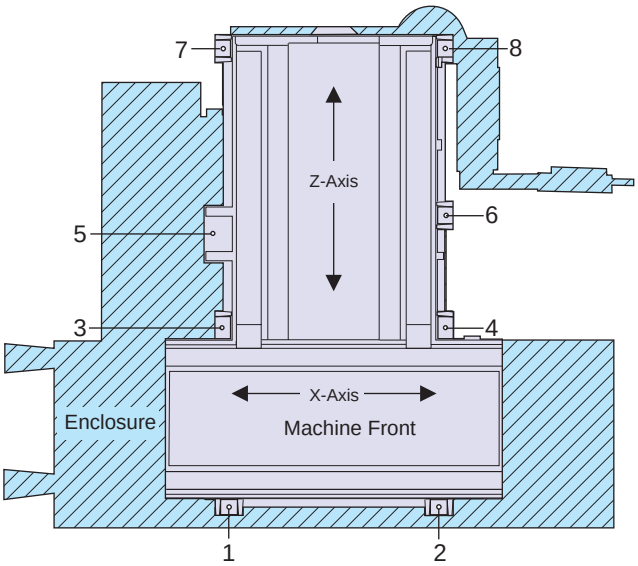


1. Disconnect rear Z axis cover from column to allow access to the Z axis linear guides. Level the base checking off of both Z axis linear guides with the level parallel to Z axis.

2. Place the level on the center of the table, parallel to the Z-axis, and note the position of the bubble.

3. Jog the table to the left, until the level is above screw 1, and note the position of the bubble.

4. Jog the table to the right, until the level is above screw 2, and note the position of the bubble.

5. Adjust for roll, by using screws 1 and 3 or screws 2 and 4 until the position of the bubble remains constant over the full range of travel.

6. On newer EC-1600/2000 machines, X-axis pitch can be removed by adjusting the jacking screws under the base (one on each side - see illustration).

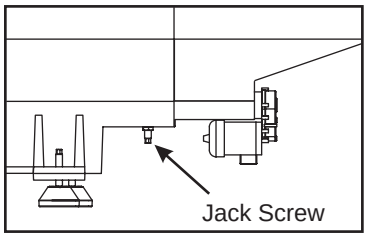


Readjustment may be needed after heavy loads are placed on the table. For the EC-3000, use the outrigger screws for pitch adjustment by turning the screws for each outrigger by equal amounts in the same direction so as not to affect roll.

**NOTE:** This adjustment is critical to the proper function of the machine. Pitch and roll must be completely eliminated.

7. Jog the table to the center of travel.

8. Place 1-2-3 blocks (gauge blocks) on the platter or table, for machines without the A-axis platter, (ensuring both surfaces are clean); one at the rear of the platter or inside of the table, and one at the front of the platter, or outside edge of the table.

9. Attach a .0005” indicator to the spindle head and zero out on the block at the rear.

10. Jog the Z-axis to the front of the platter, or outside edge of the table, and indicate the 1-2-3 block.

11. Raise or lower screws 1 and 2 equally, and repeat, until readings between blocks without rotating the A-axis platter are within .0001”.

12. Remove roll from the Z-axis. Place a level on a 6” square of granite, or suitable block, inside the rear of the column, with the level parallel to the X-axis. Shim the level as necessary. The level does not need to be centered, just within a readable range.

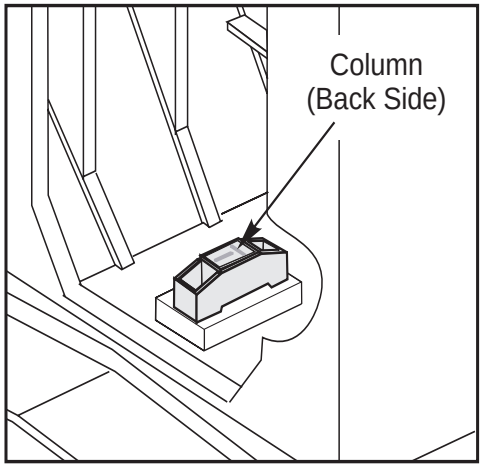


13. Jog the column to the maximum (Z-negative) position and note position of the bubble, then jog the column to the maximum (Z-positive) position and note position of the bubble. Adjust screws 7 and 8 by equal mounts in opposite directions, to eliminate roll without affecting the results of Steps 6 through 10.

**14. Re-verify steps 2 through 11.**

15. Adjust until readings at each end of the travel are within .0001”.

16. Remove the level and the block from the back of the column.

17. Repeat Steps 6 through 10 to verify the Z-axis geometry in relation to the platter or table. Keep in mind that when repeating these steps, that Z-axis roll has already been removed, so leveling screws 7 and 8 must be adjusted up or down equally that is, both up or both down in equal amounts.

18. Remove pitch from the Z-axis. With a level placed parallel to the Z-axis (inside the column), jog the column to the maximum (Z-negative) position and note the position of the bubble, then jog the column to the maximum (Z-positive) position and note the position of the bubble.

19. If necessary, adjust leveling screws 5, 6, 7 and 8 to correct for Z-axis pitch.

20. With Z-axis pitch established, repeat all steps to verify X-axis roll (and pitch, if the machine has the means for such an adjustment), Z-axis pitch and roll, and the indication in the Z-axis across the platter of table. If all are correct, move on to A-axis rotation, geometry, and TC alignment verification. If not correct, repeat the necessary steps to correct the error.

21. When leveling is complete, reinstall Z-axis waycovers and seal with black RTV.

Once these steps are verified to be correct, with the axes at the center of travel and the bubble level at the center of the table checking in the X and Z plane, it is possible that the machine table surface may not be perfectly perpendicular to earth gravity. This is acceptable, as long as the machine is square and its geometry is correct.

**NOTE:** If Z-axis pitch cannot be adjusted to a tolerance that allows for correct geometry; it is necessary to determine the cause for error in Z-axis flatness, and to take necessary steps to correct the problem. Normally this is due to a bow in the casting between the front and the rear of the Z-axis portion of the base casting, and adjusting leveling screws 5 and 6 corrects this. If pitch cannot be adjusted into tolerance with leveling screws 5 and 6, it may be that an upward bow is present. If so, it may be necessary to anchor the machine to bring the flatness into specification. If you believe this condition exists, please contact Haas factory service.

## Tool Changer Alignment Verification

TC alignment must be verified before loading any tools. Any adjustment or change to the machine level will affect TC alignment. Incorrect TC alignment can result in dropped tools, damaged waycovers, cambox damage, excessive wear, and damage to the TC double-arm.

**Warning**

**Verify tool changer alignment before operating the mill.**

As a safety precaution the Service technician must ensure the tool changer is aligned properly to the spindle. The installation and leveling of a new machine affects tool changer alignment. Use the following instructions to verify alignment. Do not load any tools into the tool changer or spindle until alignment is complete.

Tool Required: Split Tool P/N T-2088 for 50 taper, BT tooling
T-2089 for 50 taper, CT tooling

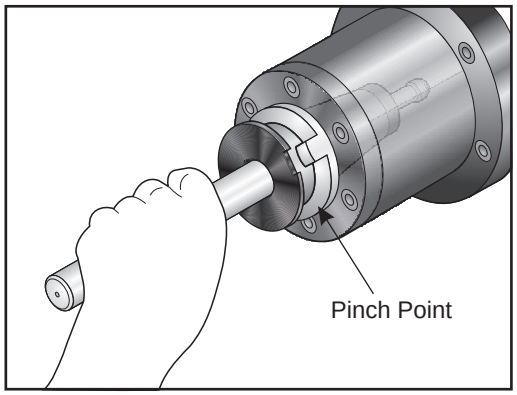


*Split Tool*

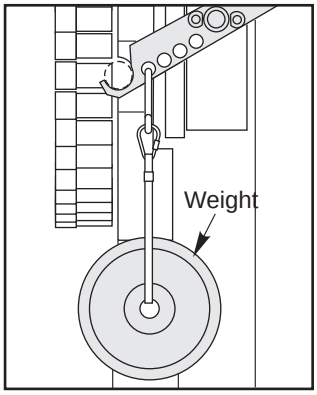


*Weight hung from the tool changer double-arm*

1. With no tool in the machine, command a tool change. Press Emergency Stop before the double arm reaches the spindle. This will cause the mill to move the Y and Z axes to the ATC position.

2. Verify the spindle is free to rotate without hitting the double arm. If necessary, use the T/C Recovery commands to move the arm further from the spindle.

3. Using T/C Recovery, orient the spindle.

4. Using T/C Recovery, rotate the double arm in the forward direction. Continue rotating the double arm until it reaches the spindle, then extends approximately 6” (152.4 mm) in front of the spindle.

5. Using the dowel pin as a handle, install the tapered half of the split tool into the spindle. Be careful to not place your hands in the pinch point between the tool and the spindle. The Tool Release button operates in a Toggle On/Off mode during Tool Recovery. Press once to activate the Tool Release; press again to clamp.

6. Remove the dowel pin, and install the second half of the split tool into the end of the double arm in front of the spindle. It will be necessary to manually press the tool lock plunger (near the center of the shaft as shown in the Service manual) to allow the spilt tool to be inserted.

7. Using T/C Recovery in the reverse direction, move the double arm back toward the spindle until the halves of the split tool are approximately 1” (25.4 mm) apart.

8. Hang a 40 lb (18.2 kg) weight from the pocket side of the arm. Hang the weight from the hole closest to the pocket. This will preload the arm.

9. Continue to move arm toward spindle. Watch double arm as it approaches spindle. The spindle dogs and slots in the double arm should line up. This verifies Parameter 257 (Spindle Orient Offset). If spindle and arm do not line up, reset Parameter 257 as described in Service Manual, and continue moving closer until there is a maximum of 1/8” (3.2 mm) gap between the split tool halves, ensuring the halves do not touch each other.

10. Check the X and Y alignment of the double arm to the spindle by inserting the alignment dowel through both halves of the split tool. The dowel should slide freely. If the pin does not slide freely, the direction of the misalignment may be determined by feeling the “step” between the split tool halves, by using a steel rule, straight edge, or similar tool.

11. If misalignment is present, adjust the leveling screw under the tool changer mount. Verify machine level before continuing.

12. Using T/C Recovery, move the double arm in the forward direction, away from the spindle. Remove both halves of the split tool.

13. Install a tool holder into the double arm, measure the distance from the front of the double arm to the front face of the tool holder (see diagram), and record the distance.

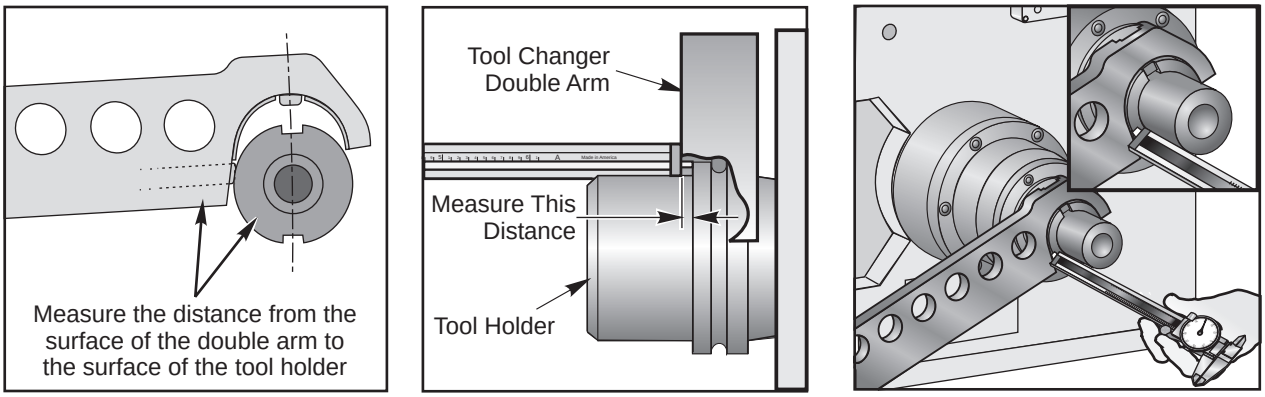


14. Remove the tool from the double arm. Using T/C Recovery, move the arm in the reverse direction to the spindle. Continue until the arm rotates to the origin “Home” position. Once the arm is away from the spindle, insert the same tool holder used in Step 13 into the spindle.

15. Using T/C Recovery, rotate arm forward until it is very close to the tool holder. The spring-loaded slide is depressed as arm nears the tool holder, but be sure that arm is not touching the tool holder itself.

16. Using a caliper, measure between the same two surfaces described in Step 13. The measurement should be the same, +/-.010” (.254 mm). Be sure that you are measuring the distance between the double arm and the tool holder, not the spring-loaded slide and the tool holder. If adjustment is required, refer to “Setting Parameter 64” in the Service Manual.

17. If no changes are needed, complete Tool Change Recovery.

18. Note that the same end of the double arm must be used for the caliper measurement. The two ends may have different readings. This is normal and will not affect operation.

19. Load tools (maximum 30 lbs (13.6 kg) each) into machine, and perform tool changes to verify proper operation. Protect the Z-axis way cover (closest to the column) in case a tool is dropped from the spindle or tool changer arm. The tool changer should be operated at 100% rapid speed, otherwise tool changer motion may jerk or be sluggish.

## Tool Changer Enclosure Installation

### EC-630

The EC-630 tool changer enclosure is first assembled, then secured to the machine on the tool changer side.

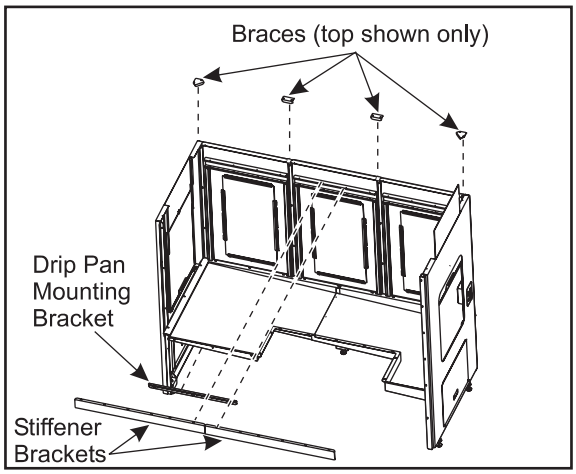


*Tool Changer Enclosure Assembly*

1. Connect the first side panel to a front panel. The side panels can be identified by their opening windows. Install the upper and lower corner braces to this assembly.

2. Attach the remaning two front panels to the assembly, including the top and bottom braces.

3. Attach the final side panel, including the top and bottom corner braces.

4. Install the two stiffener brackets to the upper inside of the three front panels.

5. Install the front drip tray panel to the inside left of the enclosure assembly. Attach the drip pan mounting bracket to this panel.

6. Install the remaining drip tray panel.

7. Slide the assembly close to the EC-630 and attach the coolant drain hose to the drain pan. Adjust height as necessary to align pemnuts and holes in the sheet metal. Secure the tool changer enclosure assembly to the EC-630 and connect the tool changer remote control box to the control cabinet.

### Tool Changer Access Covers (EC-300)

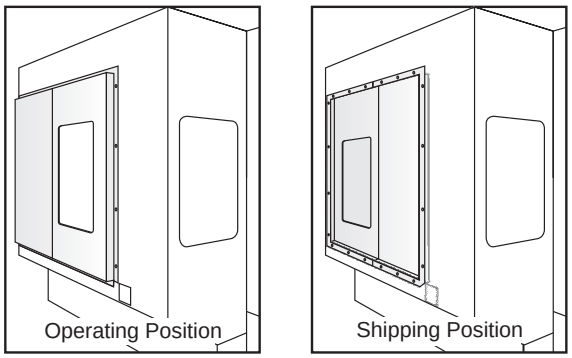


The front and rear tool changer access covers are mounted inside-out on the enclosure for shipping. Remove and reassemble during installation.

1. Remove screws securing the front and rear access covers (may be removed as one piece). Remount access covers so they protrude out from the enclosure. The window should be toward the front of the machine.

## Machine Geometry Verification

### Spindle Sweep

**NOTE:** Machine must be properly leveled for accurate spindle sweep adjustment.

1. Place an indicator on the table and insert a 6” precision test bar into the spindle.

2. Jog the Z-axis while indicating the bottom, then the side, of the test bar. The readings must be within 0.0005”/10” in both the Y/Z and X/Z planes, as stated in the inspection report supplied with the machine.

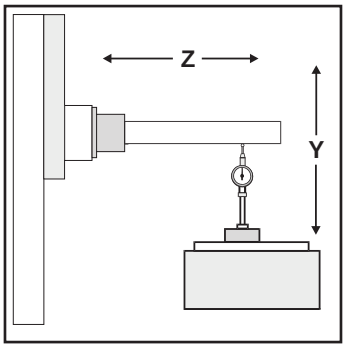


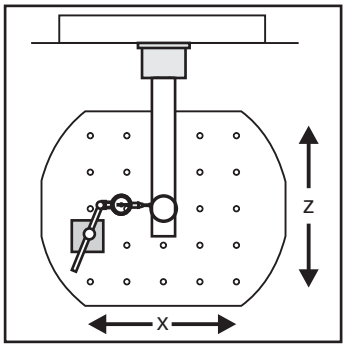


### A-Axis Rotation Verification

These steps measure the parallelism of the A-axis (axis of rotation) to the Y-axis, and the platter face runout. The geometric inspection report (GIR) is placed in the back of the operator’s manual when the machine is shipped from the factory. Refer to this document for A-axis and column square verification.

1. To check the axis of rotation, check a single point at four positions, 90° apart on a 1-2-3 block, as shown in the illustration.

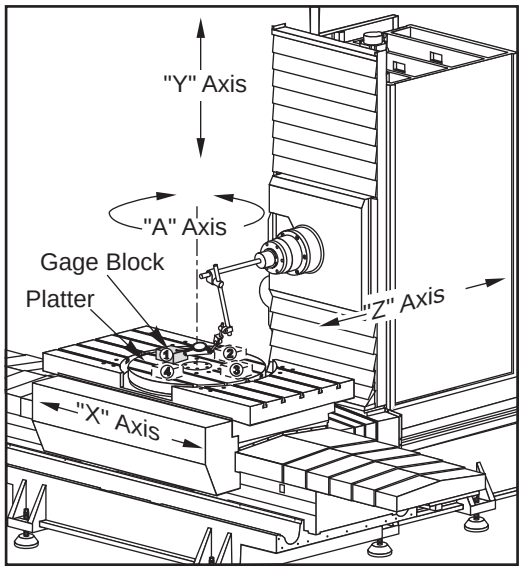


Rotate the platter 90° CW, then **jog the X and Z axes** to the indicating point. Check the block in the same spot, record the reading, and repeat the procedure every 90°.

If the A-axis is an indexing axis, (not a full 4th rotary axis) remove the 1-2-3 block while indexing between readings to provide clearance for platter pop-up.

**NOTE:** The readings are not to exceed 0.0005”.

2. To check the platter face runout, check four points, 90° apart, by indicating the runout at the 0° position (as shown in the previous illustration). To do this, jog the axis to locate the indicator at the 0° position and zero out the indicator. Leave the indicator in this position for all four readings. **Rotate the platter** at 90° increments and record the readings.

**NOTE:** The readings are not to exceed 0.002”.

## Axis Verification

These steps measure squareness of the Y-axis to the X-axis, and squareness of the Y-axis to the Z-axis.

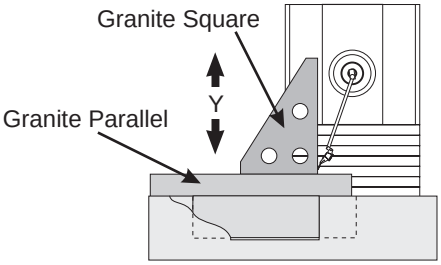


*Y-axis Tilt Relative to X-axis*

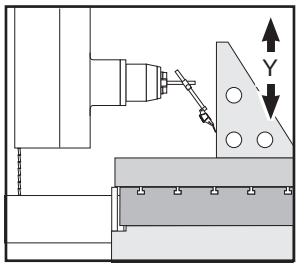


*Y-axis Tilt Relative to Z-axis*

1. Set up the granite parallel and square, as shown in the above illustration, to check Y-axis tilt relative to the X-axis. Position the square so that its edge overhangs the parallel enough to take an indicator reading on the underside of the square (parallel to the X-axis). Before taking this reading, adjust the square by indicating across its vertical edge to ensure that it is parallel with the Z-axis (obtain a zero reading). Now indicate the underside of the square to verify a zero reading. If the reading is not zero, check that all surfaces are clean.

**NOTE:** The granite parallel may need to be shimmed to obtain a zero reading, due to table surface tolerance.

2. With the indicator positioned as shown in the illustration, slowly jog the Y-axis a minimum of 24” to check Y-axis tilt relative to the X-axis.

3. Set up the granite parallel and square, as shown in the above illustration, to check Y-axis tilt relative to the Z-axis. Position the square so that its edge overhangs the parallel enough to take an indicator reading on the underside of the square (parallel to the Z-axis). Before taking this reading, adjust the square by indicating across its vertical edge to ensure that it is parallel with the X-axis (obtain a zero reading). Now indicate the underside of the square to verify a zero reading. If the reading is not zero, check that all surfaces are clean.

**NOTE:** The granite parallel may need to be shimmed to obtain a zero reading, due to table surface tolerance.

4. With the indicator positioned as shown in the illustration, slowly jog the Y-axis a minimum of 24” to check Y-axis tilt relative to the Z-axis.

**NOTE:** The readings in steps 2 and 4 are not to exceed 0.0005” for 24” of travel.

**NOTE:** If the X-axis roll, Z-axis pitch and roll, and the indication in the Z-axis across the platter or table are correct, the column square should also be within specification, or very close to it. Small adjustments to the leveling can be made without compromising the overall accuracy of the machine. If excessive adjustment is necessary to bring the column square into tolerance, or if you have any questions, please contact the Haas factory service department for technical support.

## Coolant System Installation

### Coolant Separator

The coolant separator is mounted in its shipping position. Remove the two screws and remount the coolant separator in the lower mounting location. Do this for both of the coolant separators.

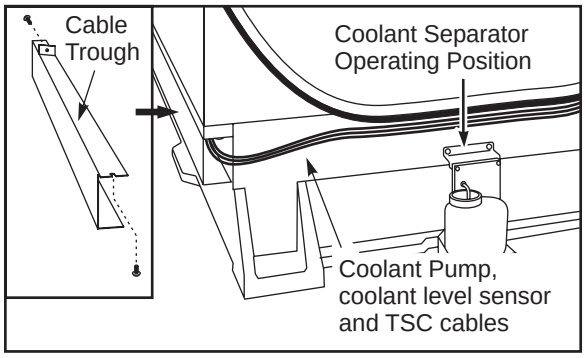


### Coolant Trough

Route the coolant tank and TSC (optional) cables through the coolant trough. If necessary remove the trough (2 screws) to ensure that the cables are properly routed.

### Coolant Tank Installation

**EC-300** - The coolant pump(s) will be packed inside the machine enclosure for shipping. Remove the handle from the underside of the coolant tank lid. Use the same hardware (screws) to secure the handle to the coolant tank. Orient the pump(s) and lower into the coolant tank. Place the supplied cover(s) as shown. When not using a TSC pump, install the large cover in place of the two small covers.

1. Position the coolant tank.

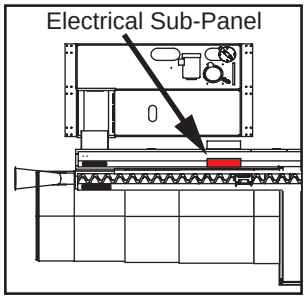


*HS 3-7*

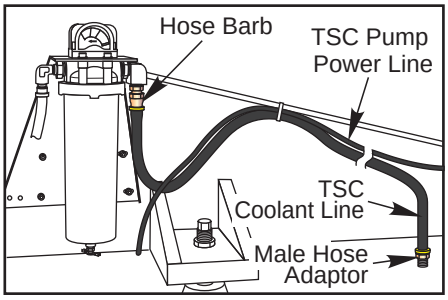


*EC-300*

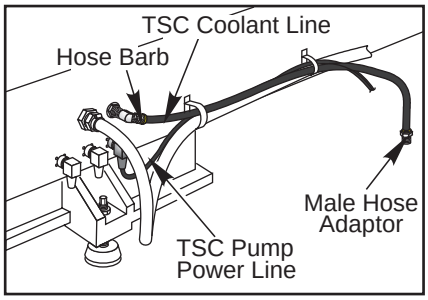


*EC-400*

**NOTE:** It is important that the coolant tank is in place before leveling the machine to ensure there is adequate clearance (height) between the bottom of the auger trough and the tank.

2. The Coolant Level Float Assembly is shipped in a separate box. It consists of a housing, float and cable. Install the Coolant Level Float Assembly by lowering the float through the tank lid. Line up the slots in the housing with the dimples on the side of the tank and press down so the float assembly clips onto the tank. **95-Gallon coolant tank** - The float can be mounted on either the edge of the coolant tank or the center.

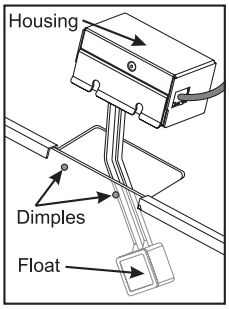


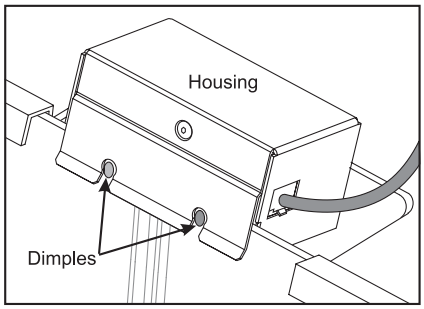


3. Insert a plastic push wire mount into the hole in the tank lid, then route the cable to the coolant pump(s). Tie wrap the coolant float cable to other cables, when available, when routing from the coolant tank (see figure).

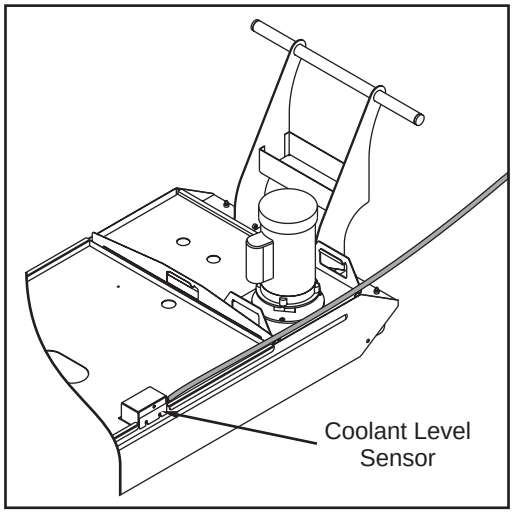


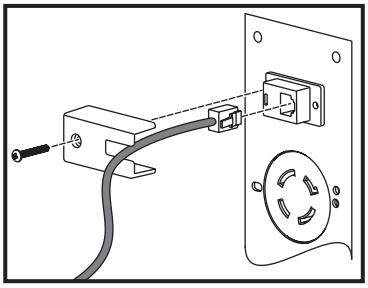

*55 Gallon tank shown*

4. Connect the cable to the Coolant Level Gauge plug. Locations:
   EC-Series: Rear sheet metal below tool changer.
   EC-630: Rear sheet metal on lower right-hand side.

Remove the cover from the RJ-12 style connector, plug in coolant level sensor cable, and replace cover.

5. Select the Current Commands screen on the operator's pendant and manually move the float up and down to ensure that the display reflects a corresponding change in the coolant level.

6. Connect the Standard coolant line (3/4" O.D.) to the Standard pump.

7. **EC-300/400/500** – Route cable to the outlet on the side of the machine. **EC-1600-3000** – Route the cable, under the machine, to the control cabinet.

8. If machine includes Through the Spindle Coolant option, attach the 1/2" O.D. coolant line to the TSC pump.

9. Fill coolant tank with coolant.

**Warning**

Mineral cutting oils will damage rubber based components throughout machine.

**NOTE:** Before operating the coolant system, ensure the drain is positioned half way over tank strainer.

## Oil/Coolant Separator

The oil/coolant separator may be shipped installed or no installed depending on the machine configuration.

If the separator is not in place, install the assembly to the nipple on the base casting. Install the aluminum tube to the fitting on the back of the separator.

Once installed, check the level of the separator (use the built-in bubble level) and tighten the jam nut.

**NOTE**: Never reuse waste oil from the Oil/Coolant Separator; dispose of properly.

## EC-630 Coolant Tank/Chip Conveyor Installation

1. Remove crating and use a forklift to move coolant tank into position to be slid into place under machine.

**IMPORTANT:** Locate the two casters packaged with the coolant tank and install at the base of the chip conveyor chute support before lowering the tank.

2. Install pumps and coolant level float into the coolant tank as shown.

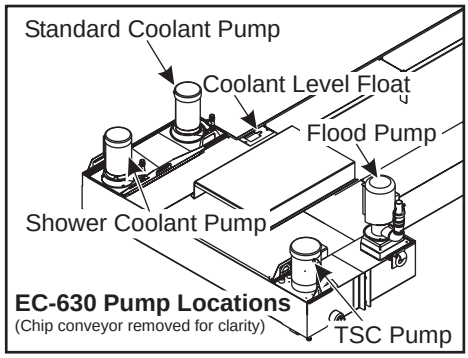


**EC-630 Pump Locations**
(Chip conveyor removed for clarity)

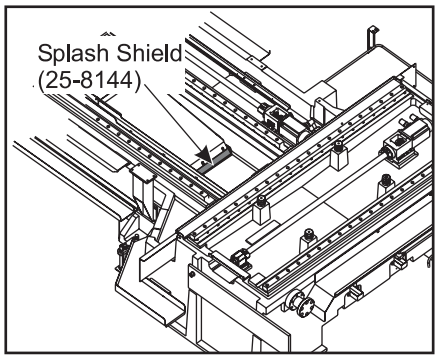


3. Inside the machine, remove the splash shield (P/N 25-8144) located at the bottom of the machining area.

4. Slide the coolant tank under the base casting. Measure the distance between the base casting and the opposite face of the pump box area of the coolant tank. This distance must be between 6 7/8” and 9” to get the chip conveyor in the correct position within the machine.

5. Connect hoses to the correct pumps, and connect pump electrical cables to the appropriate connectors as labeled on the enclosure.

6. Reinstall the splash shield.

7. Fill coolant tank with coolant.

**Warning**

Mineral cutting oils will damage rubber based components throughout machine.

## Chip Evacuation

## Chip Auger Installation for EC-400/500

1. Unpack the discharge tube.

2. Machines with multiple augers have the two side augers installed at the factory. The remaining auger (front) is installed by putting it through the discharge tube opening, then use the provided 5/16-18 x 2½” bolt to fasten it to the motor shaft coupling.

3. Install the discharge tube into place. Attach with eight SHCS and locking washers and tighten uniformly. **EC-400:** Fasten the trough extension box to the end of the auger trough using six (6) BHCS. Fasten the trough extension covers to the top of the extension box using four (4) BHCS each.

4. After machine start-up, check the operation of the auger to ensure the direction of rotation will move the chips toward the discharge tube. If the auger is turning so that the chips are not being moved toward the discharge tube, change the bit switch in PARAM 209 from 1 to 0 or 0 to 1 to establish a new forward direction.

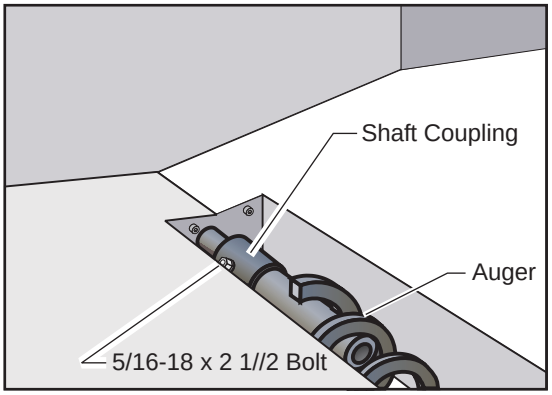


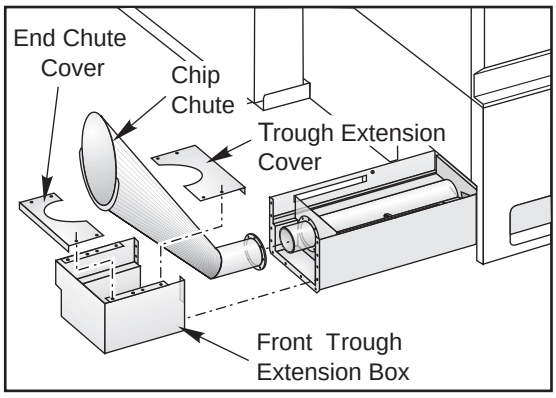


*EC- 400 / EC-500*

## Chip Auger Installation for EC-1600/2000/3000

1. Remove the cable cover. The cover is held in place with screws on the base of the enclosure. The screws are accessible from the outside of the mill.

2. Remove motor from adaptor.

3. Bolt the motor adaptor to the mill, ensuring that the gasket remains in place. Note that one of the top screws cannot be bolted in, and is not required.

4. Slide the auger out through the motor adaptor.

**NOTE:** The coupling end of the auger will be outside the mill.

5. Use a single bolt and nut to fasten the auger to the coupling on the motor.

6. Remount the motor to the adaptor, push the assembly so the auger slides back into the mill and refasten the screws that hold the motor to the adaptor.

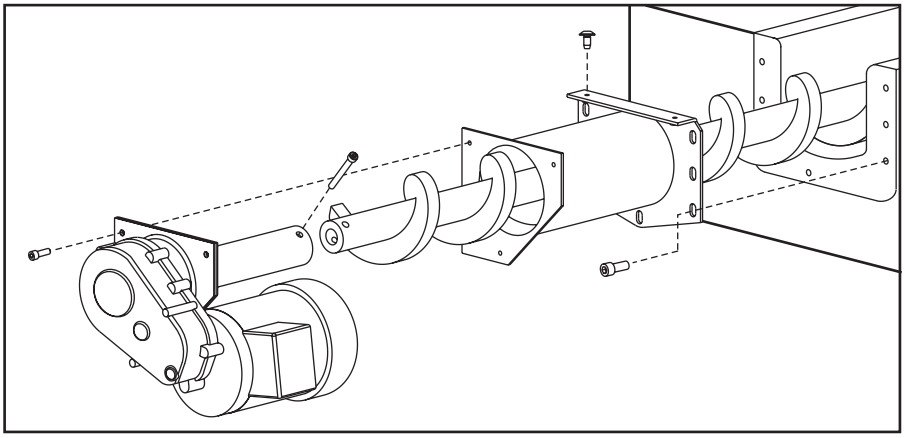

7. Route the motor cable up through the bottom of the cabinet and connect it to the chip conveyor board inside the control cabinet.

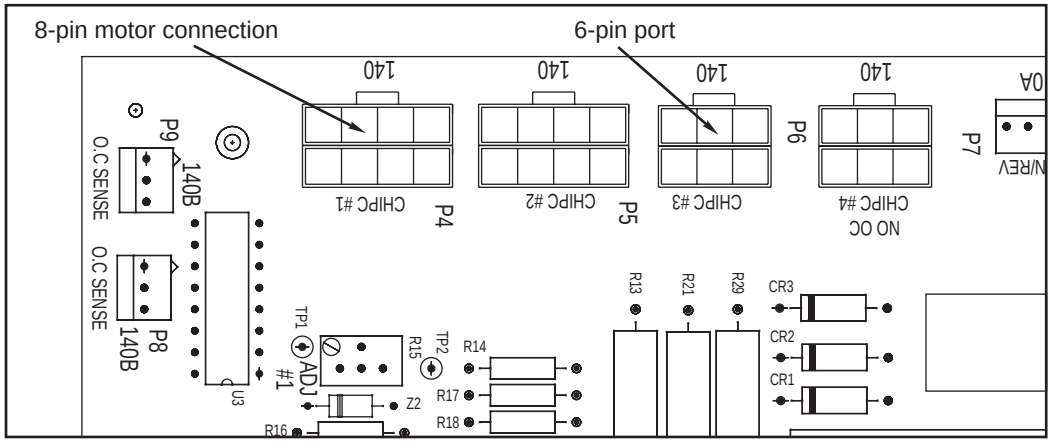


Ports 1 and 2 on the chip conveyor board are 8-pin ports to which the cable can be directly connected. Ports 3 and 2 are 6-pin ports that require a cable adaptor (already in place on the board).

**NOTE:** Chip conveyors and chip augers cannot be connected to the same card. Typically, a chip auger is connected to the I/O board and a chip conveyor is connected to the chip conveyor board.

## EC-300 Chip Conveyor Installation

### Unpacking

1. Inspect the container for damage, open the container, and cut the bands holding the conveyor in place. Install the feet, leaving approximately 4” of thread for proper height.

2. Unfold the conveyor, feeding the belt into the head as the conveyor unfolds. Do not pinch the belt with the conveyor body. Once unfolded, the belt should hang out the end. Install the bolts at the hinge to lock the conveyor body in place.

3. Take slack out of the conveyor belt until the belt hangs about 6” out. Align the links and install the link pin. Install washer and cotter pin to lock the pin in position. Set the belt tension adjustment screws to approximately 2 3/4” (70mm) for proper belt tension. Install the conveyor motor and ensure that all four of the motor bolts are tight. Install the sheet metal covers.

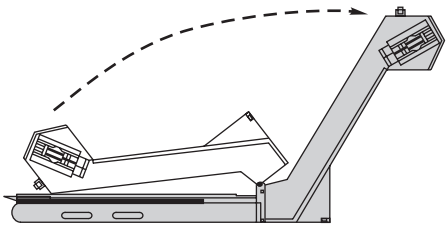

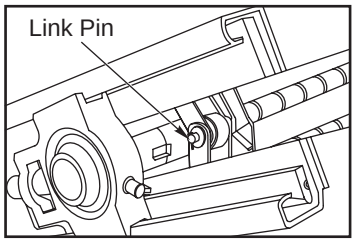


### Installation

1. Remove the conveyor gap covers from the conveyor pickup area inside the machine.

2. Attach a lift to the hoist loops, raise the conveyor and reorient the caster wheels in the operating position.

3. Slide the conveyor into the discharge opening. Adjust caster wheel height to properly support the conveyor.

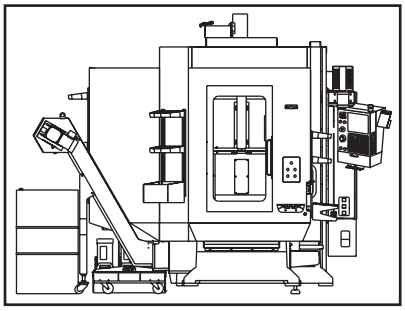

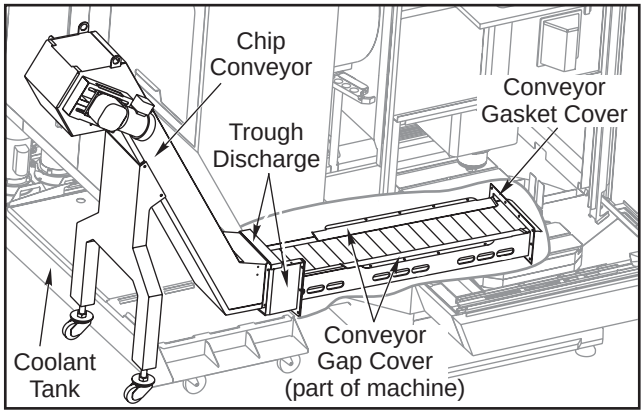


*Chip Conveyor Exposed*
*(Sheet Metal & Components Removed for Clarity)*

4. Re-install the conveyor gap covers to the conveyor pickup area inside the machine.

5. Install Air Knife into head of the Chip Conveyor. Use the four supplied flanged button head cap screws to install the air knife in the head of the chip conveyor as shown. Install hose to the fitting on the air knife

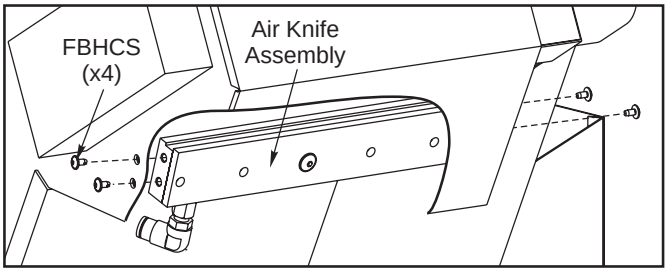


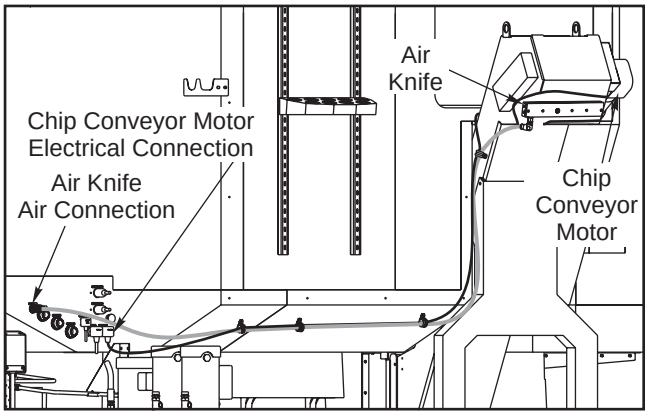


*Chip Conveyor Air and Electrical Connections*

6. Route the chip conveyor motor cable and the air knife air hose along the side on the chip conveyor and along the mill (above the coolant tank) to the sub-panel and connect to the plugs. Insert cable guides in available holes in the sheetmetal for neatness. Do not let the electrical cables droop into the coolant tank.

## Chip Conveyor Installation (Optional) EC400 / EC-500

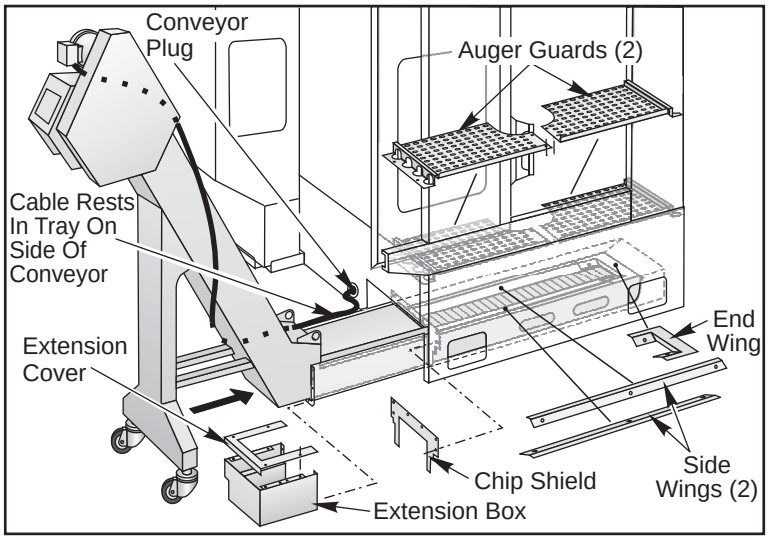


1. Unpack the chip conveyor, the chip trough extension box, and extension cover. Adjust the two casters so that the chip conveyor will be level when it is in place.

2. Remove the two-piece auger guard. Remove the two side wings and the end wing from the chip trough. Move the chip conveyor into the chip trough opening. Leave enough room to replace the chip shield.

3. Replace the chip shield, making sure it is behind the flange on the chip conveyor then push the chip conveyor in all the way until it makes contact with the back of the trough.

4. Install the two side wings and slide them outward so that they make contact with the side of the auger trough. Fasten the end wing with two (2) BHCS.

5. Fasten the chip shield to the trough. Fasten the trough extension box to the end of the auger trough and the extension cover to the extension box.

6. Replace auger guards, and plug chip conveyor into the amphenol connector on the side of the machine.

7. After machine start-up, check operation of the chip conveyor to ensure direction of rotation moves the chips toward discharge end. If chip conveyor is turning so that chips are not being moved toward discharge end, change bit switch in PARAM 209 Reverse Conveyor from 1 to 0 or 0 to 1 to establish a new forward direction.

## Chip Conveyor Installation (Optional) EC-1600-3000

1. Place the 95-gallon coolant tank beside the EC-1600.

2. Lift the chip conveyor and put it into the coolant tank with the head of the conveyor at the same end as the coolant pumps.

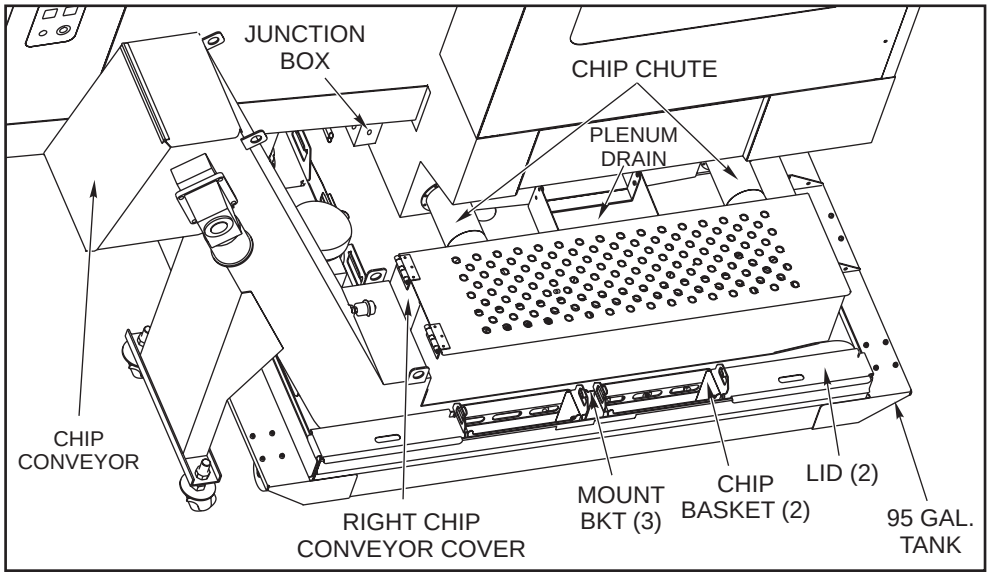


3. Slide the chip baskets onto the mounting brackets on the side of the conveyor.

4. Put lids on both ends of the tank by the chip baskets.

5. Connect all hoses and cables to the coolant tank. The EC-1600 pump power and level sensor cables connect to a junction box positioned above the coolant tank.

6. Push the coolant tank into place, being sure to line up the chip chutes and plenum drain with the openings in the right chip conveyor cover.

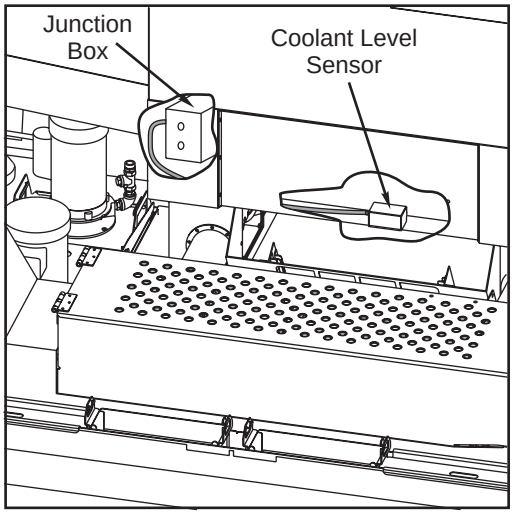


## Through the Spindle Coolant (TSC) System

**Warning!**

**The TSC pump is three phase and must be phased correctly!**
**Improper phasing will damage the TSC pump and void the warranty.**

1. Fill the coolant tank with coolant and connect all hoses and power cords. Zero Return the machine.

2. Press the MDI button and turn on TSC by pressing the AUX CLNT button. Quickly go to the back of the machine and check if the TSC pump motor is turning and pushing coolant through the clear intake hose. If it is, the machine is properly phased. If not immediately stop the pump by pressing the RESET button. Check that the intake hose connection is tight, the connection must be tight for the pump to prime itself. If the motor is not turning, check that the power cords are connected and the circuit breaker inside the control box is on.

The TSC pump will not pump if it is rotating backwards. The motor rotation should be clockwise when viewed from the fan end.

**CAUTION:** Running The TSC pump dry for more than 60 seconds can cause serious damage to the pump.

3. If the machine is improperly phased perform the following procedure:
   a. Turn off the power to the input side (top) of the main circuit breaker. Measure the Voltage!
   b. Exchange any two wires at the input side (top) of the main circuit breaker as shown.
   c. Close the control box. Return to Step 2 and test for proper phasing.

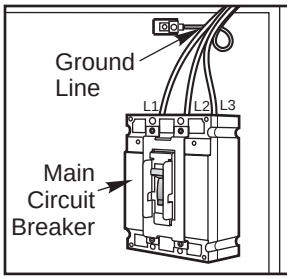


## Optional Auxiliary Filter for TSC System

### Installation

1. Hang the auxiliary filter assembly from the coolant tank handle and secure it with two 1/4-20 screws as shown.

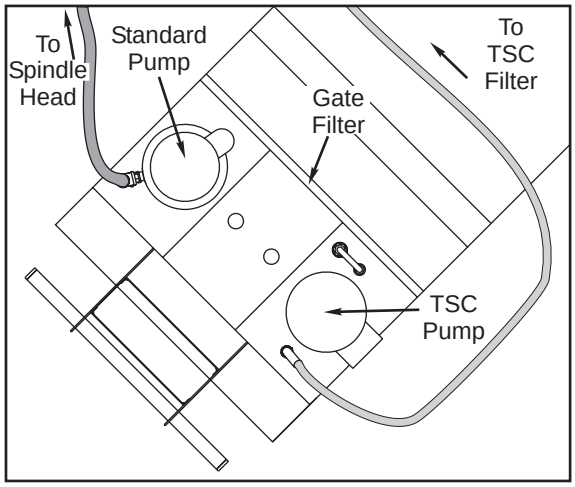


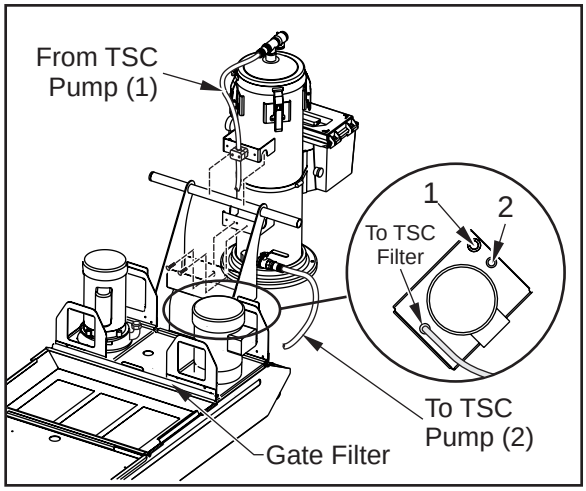


*Standard Filtration Setup*

2. Connect the hose attached to the spindle head to the hose connection on the Standard Coolant Pump.

3. Separate the hoses coming from the Auxiliary Filter. They have been connected together for shipping.

4. Attach the Auxiliary Filter male connector (top hose) to female connector on the TSC Coolant Pump Assembly (Items labeled “1” in the previous illustration).

5. Attach the Auxiliary Filter female connector (bottom hose) to the short hose with the male connector on the TSC Coolant Pump Assembly (Items labeled “2” in the previous illustration).

6. Connect the plastic tubing (shipped tied to the Auxiliary Filter) from the small elbow fitting on the top of the Auxiliary Filter to the small elbow fitting on the Standard Coolant Pump hose connector.

7. Connect the hose attached to the TSC Coolant Pump Assembly to the TSC Filter Assembly.

8. Check that the filter lid is securely closed.

9. Run primary coolant system for ten minutes to prime the bag filter housing before using the TSC system.

## 1000 Psi Through the Spindle Coolant Installation

Place the 1000psi TSC assembly next to the coolant tank behind the machine with the hose connections facing the back of the machine. Use the following coolant schematic as an aid for hose routing.

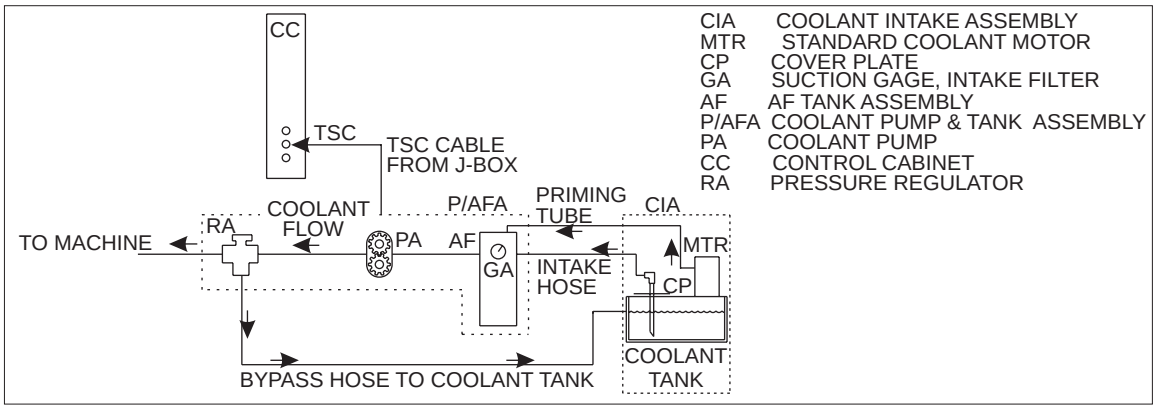


1. Connect the power cable for the pump assembly to an external source in order to power the motor. Note that the CNC control does not provide power to the pump motor. Customer supplied external power must be supplied at the time of installation. The power required is 208-230 volt 3-phase 50/60Hz, and have a 20-amp circuit breaker. The pump assembly is pre-wired with a NEMA L15-20 plug.

The pump assembly can also use an alternate power source, these are:
240-230V 50/60HZ @ 20A or 480V 50/60HZ @ 10A

To power the pump assembly from an alternate source, first replace the plug at the end of the cable with an appropriate plug for the voltage being used. Then, rewire the pump motor according to the directions on the side of the motor.

2. Plug the TSC cable from TSC junction box (J-box) to the TSC amphenol port on the side of the control cabinet.

3. Connect the hose attached to the coolant connection on the spindle head to the hose connection on the Standard Coolant Pump.

4. Connect the hose attached to the TSC input on the machine’s head to the connector labeled “1000 psi Out” on the TSC1000 connector panel (located on the side opposite the handle).

5. Attach the supply hose from the coolant tank lid to the connector labeled “Supply In” on the TSC1000 connector panel (items labeled “1” in the following illustration).

6. Connect the filter drain line from the coolant tank lid to the connector labeled “Filter Drain” on the TSC1000 connector panel (items labeled “2” in the following illustration).

7. Connect the plastic tubing (ships tied to the Auxiliary Filter) from the connector labeled “Prime Line” on the TSC1000 connector panel to the small elbow fitting on the Standard Coolant Pump hose connector (items labeled “3” in the following illustration).

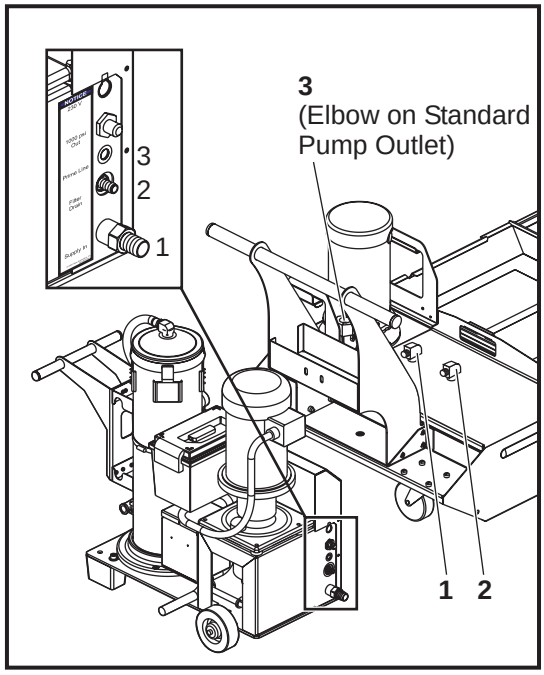


*TSC1000 / HPC1000 Setup*

## Initial Start-Up

Before using the 1000psi system the auxiliary filter must be primed. There are two ways to do this. The first is to run the standard coolant pump for 5 minutes. This will fill the auxiliary tank through the priming hose.

The second method is to attach the wash down hose to the standard coolant pump. Turn on the standard coolant system (press “MDI”, then “Coolant”). It may be necessary to turn the valve(s) on the standard coolant pump to divert coolant to the hose. Open the auxiliary filter tank cover and use the wash down hose to fill the auxiliary filter with coolant. Replace the auxiliary tank cover and tighten securely.

**NOTE:** To ensure the TSC pump does not lose its priming, a 1/4” nylon hose is connected between the standard coolant pump and the auxiliary filter to maintain the coolant level in the filter tank.

## Pressure Regulator Adjustment

The pressure regulator has been set at 1000psi and tested at the factory. No further adjustment is required. However, to change the pressure, loosen the regulator jam nut. Turn the adjusting bolt clockwise to increase the pressure or counter clockwise to decrease the pressure. (Note, the system does not need to be running to change pressure) Tighten the regulator nut once the pressure has been reset.

## Pendant Leveling

**The pendant leveling feature allows the adjustment of the pendant angle.**

1. Rotate the pendant to the position in the following figure for proper leveling. Loosen the two (2) screws on the end cap. Use a wrench on the leveling screw to change the pendant angle.

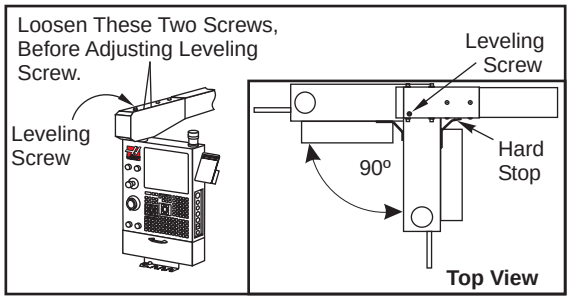


2. Tighten the two (2) screws on the end cap once the pendant is level.

3. Rotate the pendant 90° forward and check the level again. Repeat the procedure if necessary.

## EC1600-EC3000 Sound Shield Installation

Loosen the screws on the back of the column. Install the sound shield and tighten the screws. Note the position of the sound shield and the hose guard. Plug the fan into the cable from the control. Use cable ties to secure the fan wires to the other cables.

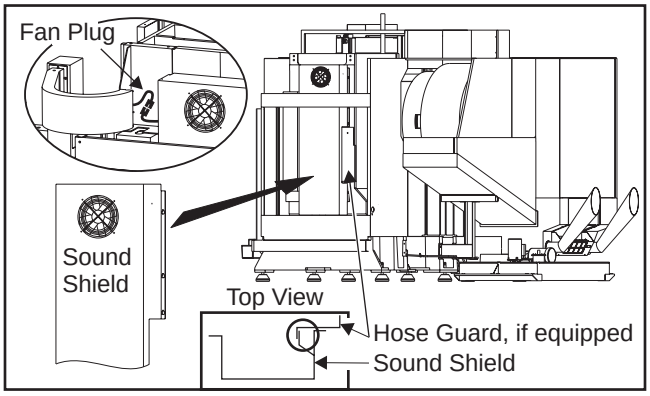


## Washdown Hose Installation

The Tote Kit supplied contains a Washdown Hose Kit. This includes one Hose, one Nozzle, two (2) Hose Washers, and one “Y” connector. The nozzle should have a washer tied on to the handle.

1. Detach the washer from the nozzle handle, and insert it into the connecting end of the nozzle.

2. Insert one of the hose washers in the female end of the hose. The other washer is a spare.

3. Attach the nozzle to the male end of the hose.

4. Remove the Coolant hose from the pump and attach the “Y” connector to the coolant pump.

5. Attach the Coolant hose to one of the “Y” outlets and the Washdown hose to the other.

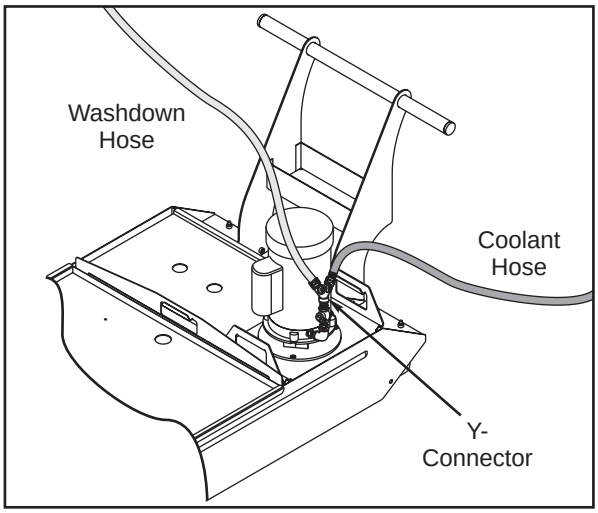


## Cable Handling/Storage

Complete the machine installation by looping and storing the extra lengths of electrical cables. Use the following techniques when dealing with excessive cable length.

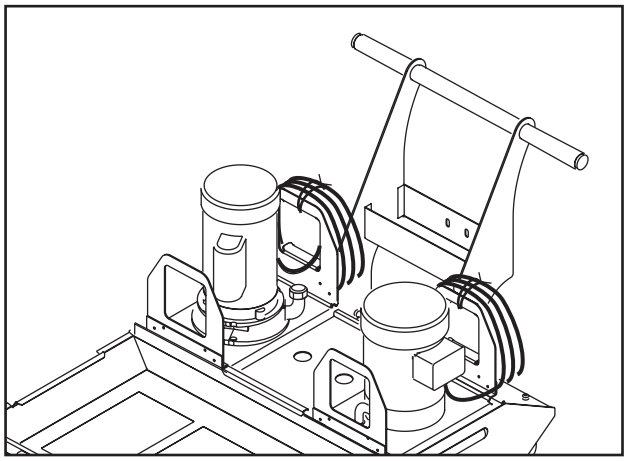

- Loop cables individually, being careful to not force the cable into too sharp a bend and tie-wrap the loop. The cable bend radius should not be less than 4 times the diameter of the cable.
- Place the loop in the cable out of sight, hidden by the machine sheet metal, if possible.
- Do NOT allow the cables to rest on the floor.
- Do NOT coil a cable around another piece of machinery (such as a pump motor).

## Work Platform Installation

Large vertical and horizontal mills include work platforms to be installed in front of the machine and secured with chains or by bolting to the floor.


**WARNING: Observe the 450-lb (204 kg) weight limit on the work platform, and understand that this limit includes the weight of the operator(s) standing on the platform and any objects they carry. Overloading the platform can lead to injury.**

## Installation

1. Place the platform in front of the machine, centered between the keyholes in the enclosure and as close as possible to the machine.


2. Push chain links through the top of each keyhole until the last possible link passes through to remove as much slack as possible from the chain.

3. Allow the first link out of the hole to settle into the bottom of the keyhole to engage the chain and secure the platform in place.

## Floor Anchoring (Optional)

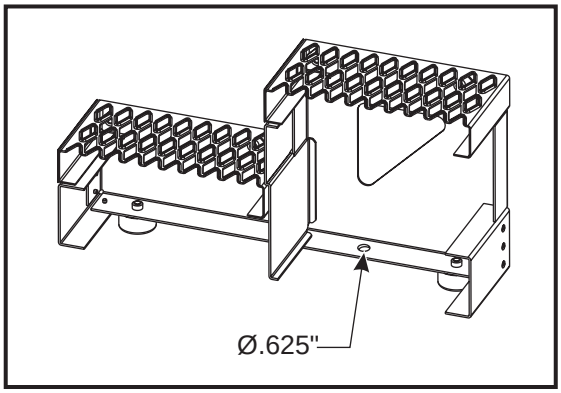


The work platform can also be anchored to the floor.

1. Through the triangular access hole on either side of the platform, check for a Ø.625” hole in the flange on the inside bottom of the higher step. If your platform assembly does not include this hole, drill one in the approximate location shown in the illustration.

2. Use 1/2” concrete lag screws or other anchoring hardware to secure the platform to the floor.

## LATHE INSTALLATION INSTRUCTIONS

Machine footprints and operating dimensions are available in the brochure and Pre-Installation Guide

### General Requirements

| | |
|---|---|
| Operating Temperature Range | 41°F to 104°F (5 to 40°C) |
| Storage Temperature Range | -4°F to 158°F (-20 to 70°C) |

Ambient Humidity: 20% – 95% relative humidity, non-condensing
Altitude: 0-6000 ft. (Do not operate machine in explosive atmospheres (explosive vapors and/or particulate matter)

### Electricity Requirements

**IMPORTANT! REFER TO LOCAL CODE REQUIREMENTS BEFORE WIRING MACHINES.**
**All machines require:**
Three phase 50 or 60Hz power supply.
Line voltage that does not fluctuate more than +/-5%

| **15 HP System** | Voltage Requirements | High Voltage Requirements |
|---|---|---|
| **SL-10** | (195-260V) | (354-488V) |
| Power Supply | 50 AMP | 25 AMP |
| Haas Circuit Breaker | 40 AMP | 20 AMP |
| If service run from elec. panel is less than 100' use: | 8 GA. WIRE | 12 GA. WIRE |
| If service run from elec. panel is more than 100' use: | 6 GA. WIRE | 10 GA. WIRE |

| **20 HP System** | Voltage Requirements | High Voltage Requirements |
|---|---|---|
| **[1]SL-20, TL-15, GT-20** | (195-260V) | (354-488V) |
| Power Supply | 50 AMP | 25 AMP |
| Haas Circuit Breaker | 40 AMP | 20 AMP |
| If service run from elec. panel is less than 100' use: | 8 GA. WIRE | 12 GA. WIRE |
| If service run from elec. panel is more than 100' use: | 6 GA. WIRE | 10 GA. WIRE |

| **30-40 HP System** | Voltage Requirements | High Voltage Requirements[2] |
|---|---|---|
| **TL-15BB, SL-20BB, SL-30, SL-30BB, [1]SL-40, SL-40BB** | (195-260V) | (354-488V) |
| Power Supply | 100 AMP | 50 AMP |
| Haas Circuit Breaker | 80 AMP | 40 AMP |
| If service run from elec. panel is less than 100' use: | 4 GA. WIRE | 8 GA. WIRE |
| If service run from elec. panel is more than 100' use: | 2 GA. WIRE | 6 GA. WIRE |

| **55HP System** | Voltage Requirements | High Voltage Requirements |
|---|---|---|
| **[1]SL-40, SL-40BB, SL-40L** | (195-260V) | (354-488V) |
| Power Supply | 170 AMP | **Must use an external transformer** |
| Haas Circuit Breaker | 150 AMP | |
| If service run from elec. panel is less than 100' use: | 1 GA. WIRE | |
| If service run from elec. panel is more than 100' use: | 1/0 GA. WIRE | |

**WARNING!**
A separate earth ground wire of the same conductor size as the input power is required to be connected to the chassis of the machine. This ground wire is required for operator safety and for proper operation. This ground must be supplied from the main plant ground at the service entrance, and should be routed in the same conduit as the input power to the machine. A local cold water pipe, or ground rod adjacent to the machine cannot be used for this purpose.

Input power to the machine must be grounded. For wye power, the neutral must be grounded. For delta power, a central leg ground or one leg ground should be used. The machine will not function properly on ungrounded power. (This is not a factor with the External 480V Option)

The rated horsepower of the machine may not be achieved if the imbalance of the incoming voltage is beyond an acceptable limit. The machine may function properly, yet may not deliver the advertised power. This is noticed more often when using phase converters. A phase converter should only be used if all other methods cannot be used.

The maximum leg-to-leg or leg-to-ground voltage should not exceed 260 volts, or 504 volts for high-voltage machines with the Internal High Voltage Option.

[1] The current requirements shown in the table reflect the circuit breaker size internal to the machine. This breaker has an extremely slow trip time. It may be necessary to size the external service breaker up by 20-25%, as indicated by “power supply”, for proper operation.

[2] The high-voltage requirements shown reflect the Internal 400V configuration which is standard on European machines. Domestic and all other users must use the External 480V option.

## Air Requirements

The CNC Lathe requires a minimum of 100 PSI at 4 scfm at the input to the pressure regulator on the back of the machine. This should be supplied by at least a two horsepower compressor, with a minimum 20-gallon tank, that turns on when the pressure drops to 100 PSI.

| Machine Type | Main Air Regulator | Input Airline Hose Size |
|---|---|---|
| GT / SL / TL-Series | 85 psi | 3/8" I.D. |

The recommended method of attaching the air hose is to the barb fitting at the back of the machine with a hose clamp. If a quick coupler is desired, use at least a 3/8".

**NOTE:** Excessive oil and water in the air supply will cause the machine to malfunction. The air filter/regulator has an automatic bowl dump that should be empty before starting the machine. This must be checked for proper operation monthly. Also, excessive contaminants in the air line may clog the dump valve and cause oil and/or water to pass into the machine.

**NOTE:** The nipple between the air filter/regulator and the Bijur oil lubricator (See illustration in "Air Connection" section) reservoir tank below the control box on the back of the machine is for the optional rotary table. DO NOT use this as a connection for an auxiliary air line. Auxiliary connections should be made on the left side of the air filter/regulator.

## Moving the Crate

### TOOLS REQUIRED

Precision bubble level (0.0005 inch per 10")
1 1/8" hex wrench or ratchet
1 1/2" wrench
Test indicator (0.0005)
3/4" wrench
Claw hammer

A forklift capable of lifting more than 9,000 pounds (14,000 pounds for the SL-30, 23,000 pounds for SL-40), with forks at least 5' long by 6" wide (6' by 6" wide for SL-30 and 8' by 8" wide for SL-40, SL-40L).

### MATERIALS REQUIRED

Wire and air hose or piping as specified in the Service Requirements section
A small amount of grease
Way lube for the lubricator (Vactra #2)

**Warning!**

**THE LATHE CRATE CAN ONLY BE MOVED WITH A FORKLIFT.**

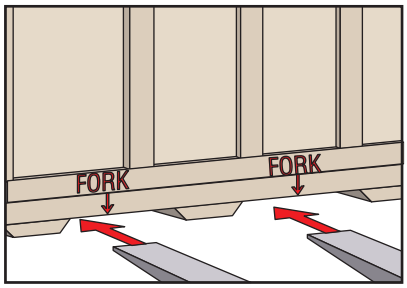


**CAUTION!** The fork positions are marked on the crate. (Also, note that there are three skids at each side of the pallet. The heavy part of the machine [the back] is positioned over the two skids that are closest together.) If the fork positions are ignored, there is a good chance that the retaining bolts will be sheared off by the forks and also that the machine will tip over when it is picked up.

## Unpacking the Lathe

### Uncrating

1. Remove the cover.

**CAUTION!** Do not put undue pressure on the top of the machine as you remove the cover.

2. Remove the coolant tank. Remove the cleats that held them in place.

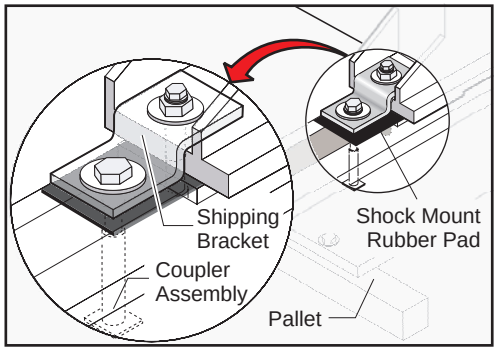


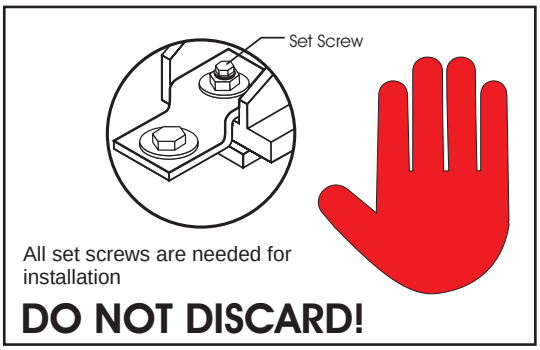


3. Remove the ¾" bolts holding the base to the pallet and the plastic thread protecting sleeve from the base.

4. Remove the nuts, on the leveling screws, holding the shipping bracket to the base casting. Remove the shipping brackets.

5. Lift the machine off the pallet.

## Leveling the Lathe

### Setting in Place

**CAUTION!** Do not lift the machine any farther than necessary off the floor when moving it, and move as slowly and cautiously as possible. Dropping the machine, even from a height of a few inches, can cause injury, result in expensive repairs, and void the warranty.

1. Unbolt clamp plates. Lift the machine until the bolts clear the pallet.

2. Thread leveling screws through casting until thread is approximately 3/8" above the top of the casting. If a screw is excessively hard to turn, remove it, dress the threads in the hole with a 1-14 tap, and inspect the screw. If the screw has dings, dress the threads with a 60° V file. Install the lock nuts on the leveling screws, but do not tighten. SL-20 machines require the lock nuts to be installed under the leveling foot.

3. Move the machine to where it will be located. Take leveling pads out of the tote kit, grease the dimple in each pad, and locate them under the leveling screws at the four corners. Lower the machine.

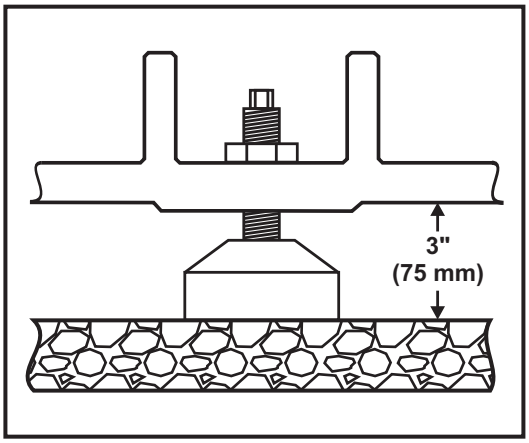


*Floor to Base Gap (14-2462)*

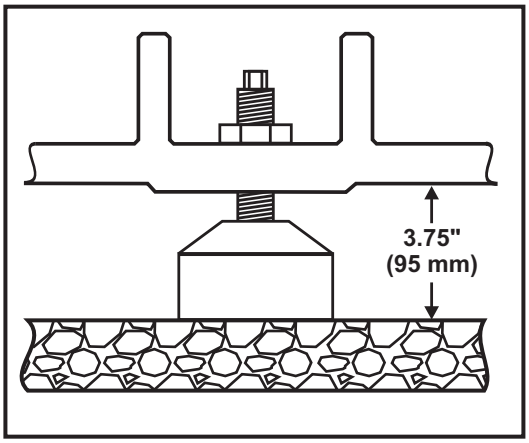


*Floor to Base Gap (14-2010)*

4. Remove all banding and packing material around the control panel, monitor and doors.

5. Remove foot switches from inside machine and attach cable to socket located at left end of front support beam, with cable facing downward.

6. Remove the lifting brackets if equipped. Replace the plugs (Haas part number 59-0487) in the casting. Sealant must be used on the plugs to prevent oil and coolant from entering the base casting.

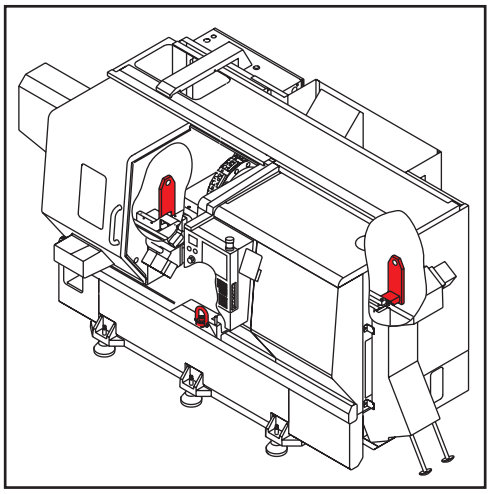

## DS / ST Series Leveling

General steps of leveling:
- Remove rear covers.
- Level in Z-Axis direction.
- Level in X-Axis direction.
- Remove twist in casting.

Tools Required:
Leveling Tool - T-2119A
Machinist's level (.0001")
3/4" wrench

### Leveling the Lathe

The lathe should be in place, on the leveling pads and power should be applied to the machine.

1. The only screws that should be in contact with the pads are the four corners. The two middle screws should be backed away from the leveling pads.

2. Jog the tool turret to the middle of travel in both X and Z-axis.

3. At the rear of the machine, remove the top rear cover to expose the Z-axis linear guides (See figure 1).

*Figure 1*

### Level the lathe in the Z-axis:

4. Place a machinist's level on the back right Z-axis linear guide (See figure 2).

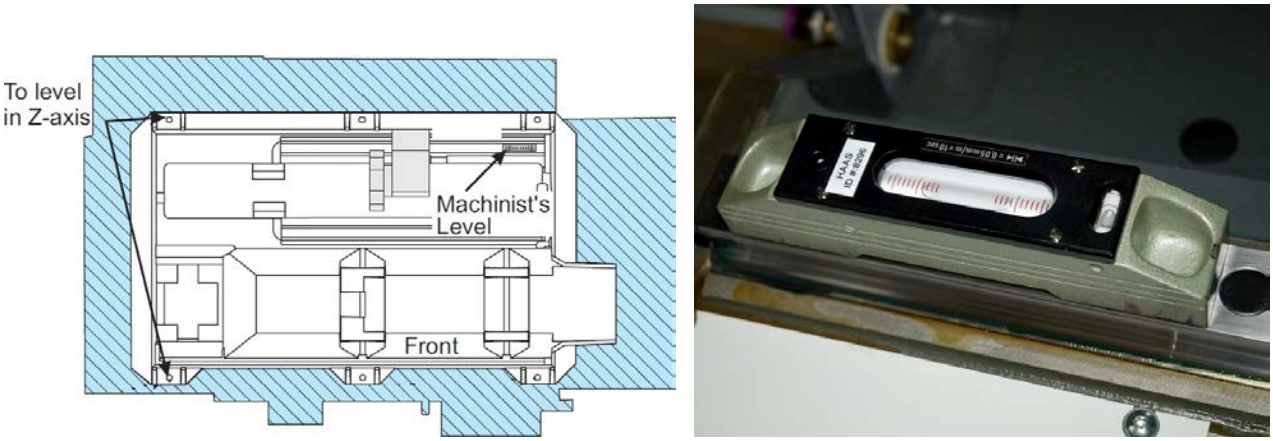


*Figure 2*

5. Level the lathe in the Z-axis, by adjusting the two left leveling screws (the front and back leveling screws closest to the spindle). Machine level is within +/- 0.0005".

### Level the lathe in X-axis:

6. Use the leveling tool (T-2119A), or a ground block across the rear Z-axis linear guide and place the machinist's level on it. The level is now parallel to the X-axis.(See figure 3).

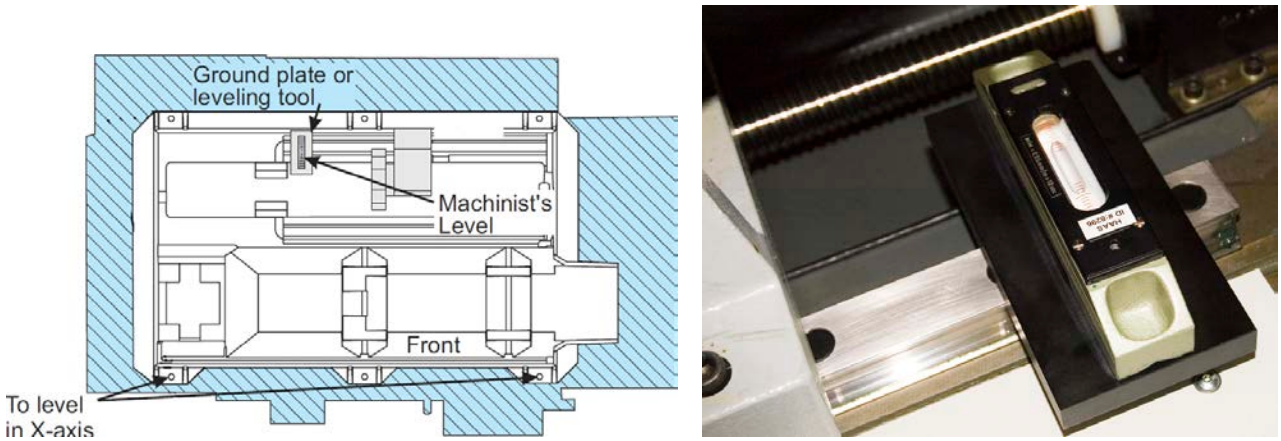


*Figure 3*

7. Level the lathe in the X-axis, using only the two front leveling screws. Machine level is within +/- 0.0005”.

8. Jog the turret to home in the Z-axis only.

### Remove twist:

Note: If available, a magnetic base on the face of the turret could be used to support the level. This would save doing steps 9-13.

9. Change parameter 43 bit 18 from 1 to 0.

10. Go to MDI and enter <M> <4> <3> and press <CYCLE START>.

11. Press <HAND JOG>, then <A>, then <HAND JOG> to jog the turret. Note: use a speed other that "0.1", the turret will rotate too fast at 0.1.

12. Once the top surface of the turret is level by eye, Change speed to <0.0001>.

13. Place the machinist’s level on the top of the turret as shown and slowly rotate. Allow time for the bubble to settle.

For dual spindle lathes, use a magnetic base to place a second level on the secondary spindle head (see the following photo). Tap the base into place to read twist on the level.

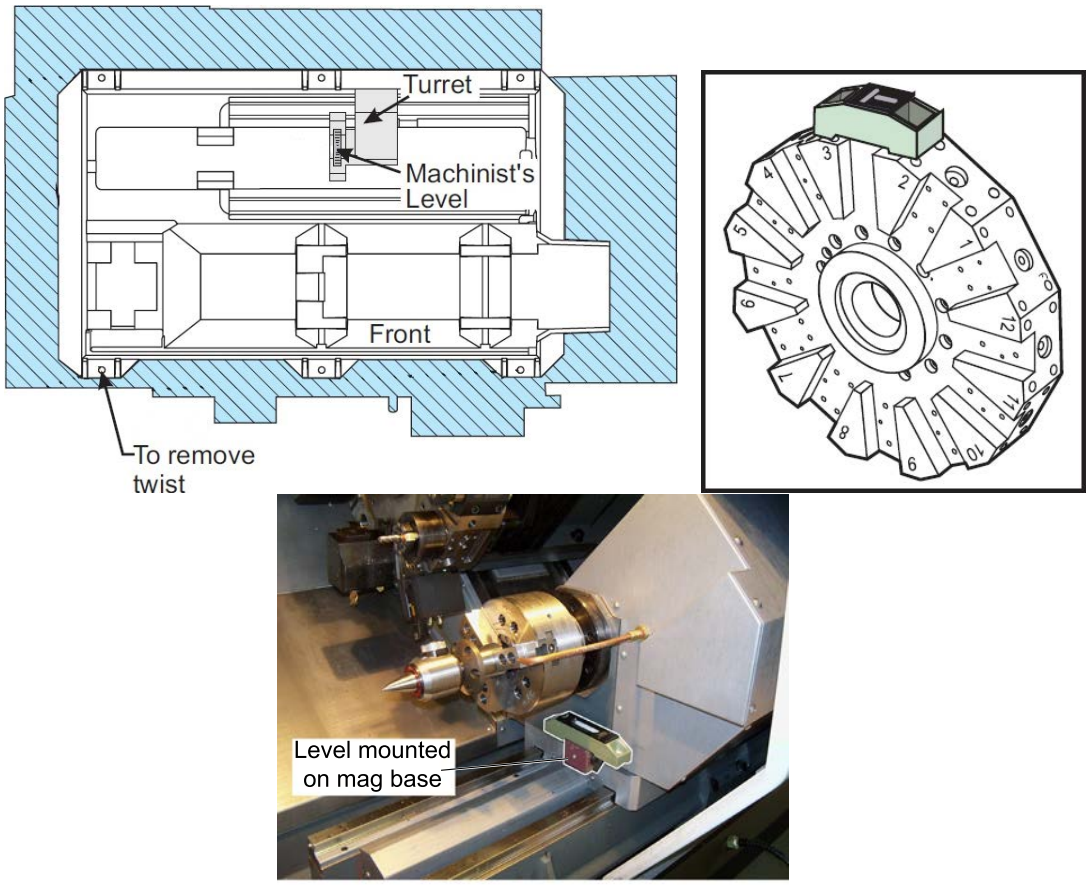


*Secondary Spindle Level Mounting*

*Figure 4*

14. Handle jog the Z-axis from home to max travel.

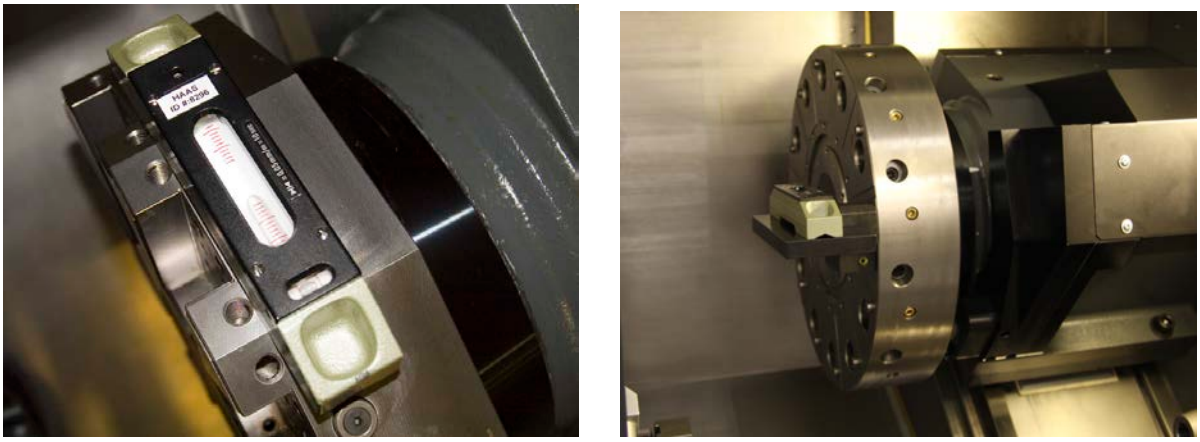

*Figure 5*

*Bolt-on Turret* *VDI Turret*

15. Use the front leveling screws to remove any twist. Adjust until it is within +/- 0.0005” over its full Z-axis travel range.

**Dual Spindle Lathes:** Repeat steps 14 and 15 using the secondary spindle axis (B) to check for twist and correct as needed.

16. Lower the middle two leveling screws (front and back of machine) and torque to 10 ft lb. (See figure 6)

*Figure 6*

17. Recheck for twist, if necessary loosen the front middle leveling screw to remove any twist. Adjust until it is within +/- 0.0005” over its full Z-axis travel range (and B-axis range for dual spindle lathes).

18. Tighten the jam nuts.

19. Verify that the machine remains level.

### Reset machine:

20. Remove the machinist’s level from the turret.

21. Press <HAND JOG>, then <A>, then <HAND JOG> to jog the turret. Note: use a speed other that "0.1", the turret will rotate too fast at 0.1.

22. Jog the turret to pocket 1 clamping position, use the coolant nozzle as a guide.

23. Go to MDI and enter <M> <4> <4> and press <CYCLE START>.

24. Change parameter 43 bit 18 from 0 to 1.

25. Home the turret by pressing <ZERO RET>, <A>, <SINGL>.

26. Replace the rear cover.

## SL-Series Leveling

Leveling the machine is required to provide proper coolant and lubrication drainage and to ensure equal loading on all four of the casting feet for consistent cutting performance. Please read through entire sequence before starting.

1. Position the turret close to the chuck (shipping position). Remove right-end rear panel to access the Z-axis linear guide rails.

2. Place a machinist's level across linear guides to level front-to-back. Place level along linear guides to level machine left-to-right.**Take care to avoid damage to linear guide rails.**

3. Level machine by rotating leveling screws. Adjust adjacent screws alternately to maintain proper loading.

4. Adjust machine height (see figure). Verify that each leveling screw requires approximately the same torque to turn. This will ensure proper loading. Tighten lock nuts.

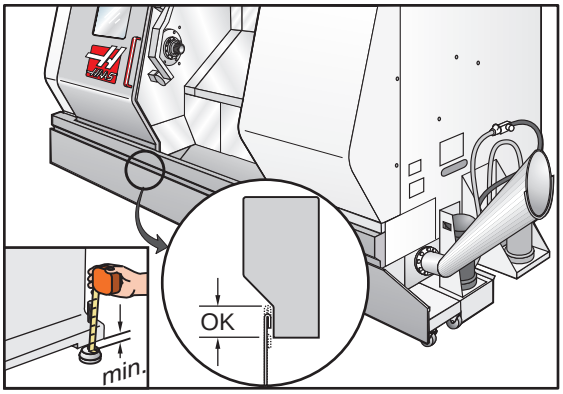


## Initial Setup

**WARNING!**

**At this point, there should be NO electrical connection to the machine. The electrical panel should be closed and secured.**

Set the main switch at the upper right of the electrical panel on the back of the machine to OFF. Using a screwdriver to unlock the two latches on the panel door, unlock the cabinet with the key, and open the door.

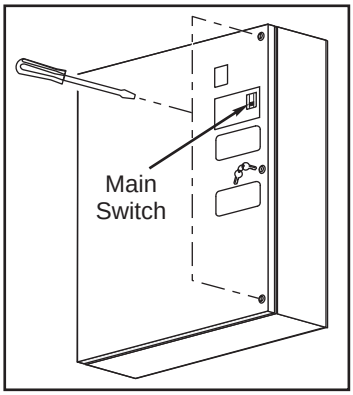


Take sufficient time to check all the components and connectors associated with the circuit boards. With the power off, push on them gently to make sure that they are seated in their sockets. Look for any cables that have become disconnected, look for any signs of damage and loose parts in the bottom of the panel box. If there are any signs that the machine was mishandled, be extremely careful in powering up the machine (be ready to shut it off IMMEDIATELY). Or if there are obvious problems, call the factory BEFORE proceeding.

## Support Arm End Cap

The tote kit Supplied will include one support arm end cap with an O-ring. The end cap is placed on the machine end of the controller support arm.

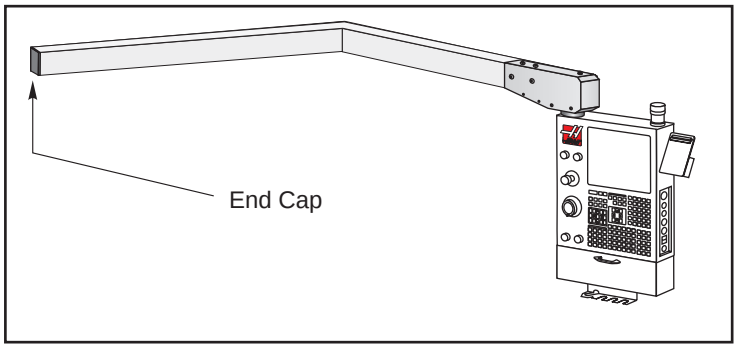


## Thin Pendant

The thin pendant assembly is shipped in place on the front of the lathe, covered with corrugated cardboard padding. When unpacking, remove the cardboard and shipping bolt (accessed through the glove box).

## Pendant Leveling

**The pendant leveling feature allows the adjustment of the pendant angle.**

1. Rotate the pendant to the position in the following figure for proper leveling. Loosen the two (2) screws on the end cap.Use a wrench on the leveling screw to change the pendant angle.

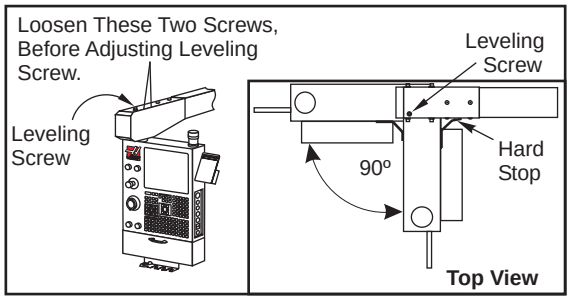


2. Tighten the two (2) screws on the end cap once the pendant is level.

3. Rotate the pendant 90° forward and check the level again. Repeat the procedure if necessary.

## Air Connection

**CAUTION!** Working with air service required for the lathe can be hazardous. Be sure that pressure has been removed from the air line before you connect it to the machine, disconnect it from the machine, or service parts of the air system.

1. With the pressure off in the air line, connect the air supply to the hose barb next to the air filter/ regulator. If the fitting supplied is not compatible, replace it.

2. Start the compressor, set it between 100 and 150 PSI. Set the regulator on the machine to 85 to 90 PSI.

## Electrical Connections

**CAUTION!** Working with electrical services required for the lathe can be extremely hazardous. The electrical power must be off and steps taken to ensure it is not turned on while working. In most cases this means turning off a circuit breaker in a panel, then locking the panel door. However, if this is not the case or are not sure how to do this, check with appropriate personnel or otherwise obtain the necessary help before contining.

**NOTE:** The machine must have air pressure at the air gauge, or a "Low Air Pressure" alarm will be present on power up.

**WARNING!**

**The electrical panel should be closed and secured at all times except during installation and service. At those times, only qualified electricians should have access to the panel. When the main circuit breaker is on, there is high voltage throughout the electrical panel (including the circuit boards and logic circuits) and some components operate at high temperatures. Therefore, extreme caution is required.**

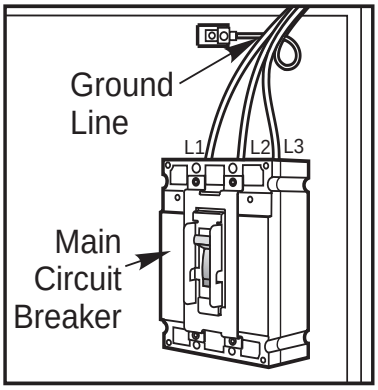


1. Hook up the three power lines to the terminals on top of the main circuit breaker at upper right of electrical panel. Connect the separate ground line to the ground bus to the left of the terminals.

**NOTE:** Make sure that the service wires actually go into the terminal-block clamps. (It is easy to miss the clamp and tighten the screw. A poor connection will cause the machine to run intermittently or have other problems, such as servo overloads.) To check, simply pull on the wires after the screws are tightened.

2. After the line voltage is connected to the machine, make sure that main circuit breaker (at top-right of rear cabinet) is OFF. Turn ON the power at the source. Using a digital voltmeter and appropriate safety procedures, measure the voltage between all three pair phases at the main circuit breaker and write down the readings. The voltage must be between 195 and 260 volts (360 and 480 volts for high voltage option).

**NOTE:** Wide voltage fluctuations are common in many industrial areas; minimum and maximum voltage supplied to a machine while it is in operation must be known. U.S. National Electrical Code specifies that machines should operate with a variation of +5% to -5% around an average supply voltage. If problems with line voltage occur, or low line voltage is suspected, an external transformer may be used. If you suspect voltage problems, voltage should be checked every hour or two during a typical day to be sure it does not fluctuate more than +5% or -5% from an average.

**CAUTION!** Make sure the main circuit breaker is set to OFF and power is off at your supply panel BEFORE you change the transformer connections. Make sure that all three black wires are moved to the correct terminal block and that they are tight.

3. Check the connections on the transformer at the bottom-right corner of the rear cabinet. The three black wires labeled 74, 75, and 76 must be moved to the terminal block triple which corresponds to the average voltage measured in step 2 above. There are four positions for the input power for the 260 volt transformer and five positions for the 480 volt transformer. The labels showing the input voltage range for each terminal position is shown in the following illustration:

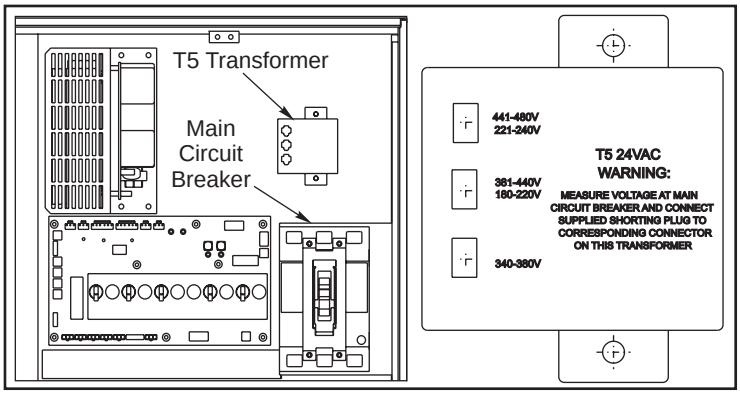


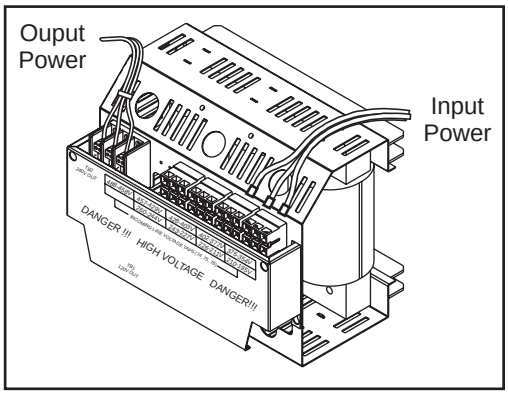


4. Transformer T5 supplies 24VAC used to power the main contactor. The transformer has two input connectors located about two inches from the transformer, which allow it to be connected to either 240V or 200V. Users that have 220V-240V RMS input power should use the connector labeled 240V, while users with 190-220V input power should use the connector labeled 200V. Failure to use the correct input connector will result in either overheating of the main contactor or failure to reliably engage the main contactor.

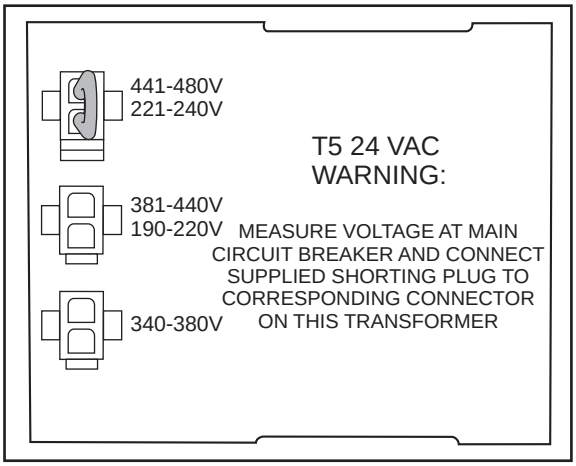


5. Set the main circuit breaker to ON. Check for evidence of problems, such as the smell of overheating components or smoke. If such problems are indicated, immediately set the main circuit breaker to OFF and call the factory.

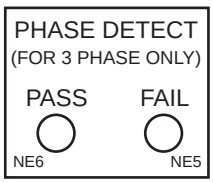


**Warning!**

**High Pressure Coolant (HPC) pump is three phase and must be phased correctly. Improper phasing will damage the HPC pump and void the warranty. Refer to the HPC start up section, if equipped.**

6. After the power is on, measure the voltage across the bottom terminals on the main circuit breaker. It should be the same as the measurements where the input power connects to the main breaker. If there are any problems, check the wiring.

7. Apply power to the control by pressing the Power-On switch on the front panel. Check the high voltage buss on the Vector Drive (pin 2 with respect to pin 3 on the terminal bus at the bottom of the drive). It must be between 310 and 360 volts. If the voltage is outside these limits, turn off the power and recheck steps 2 and 3. If the voltage is still outside these limits, call the factory. Next, check the DC voltage displayed in the second page of the Diagnostic data on the display. It is labeled DC BUS. Verify that the displayed voltage matches the voltage measured at pins 2 and 3 of the Vector Drive +/- 7 VDC.

If the displayed voltage exceeds the measured voltage by 12 volts or more, install a ferrite EMI filter (65-1452) to the current command cable near its connection to the vector drive. Secure with a cable tie (See photo). Recheck voltage.

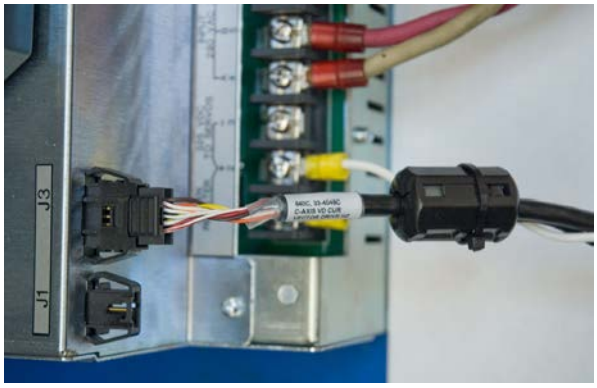


8. Electrical power must be phased properly to avoid damage to your equipment. The Power Supply Assembly PC board incorporates a "Phase Detect" circuit with neon indicators. When the orange neon is lit (NE5), the phasing is incorrect. If the green neon is lit (NE6), the phasing is correct. If both neon indicators are lit, you have a loose wire; check the connections. Adjust phasing by swapping L1 and L2 of the incoming power lines at the main circuit breaker.

**WARNING!**

**ALL POWER MUST BE TURNED OFF AT THE SOURCE PRIOR TO ADJUSTING PHASING.**

9. Turn off the power and set the main circuit breaker to OFF. Close the door, lock the latches, and turn the power back on.

10. Remove the key from the control cabinet and give it to the shop manager.

## Installation Procedure for External 480V Transformer

### Introduction

The external transformer adds to overall machine reliability and performance, however it does require extra wiring and a place to locate it. The external transformer provides electrostatically shielded isolation. This type of transformer acts to isolate all common mode line transients and improve EMI conducted emissions.

The external transformer has a 45 KVA rating. It is a 480V 60Hz only transformer.

### Installation

The transformer should be located as close to the machine as possible. The input and output wiring of the transformer should conform to the local electrical codes and should be performed by a licensed electrician. The following is for guidance only, and should not be construed to alter the requirements of local regulations.

The input wire should not be smaller than the 6AWG for the 45KVA transformer. Cable runs longer than 100” will require at least one size larger wire. The output wire size should be 4 AWG.

The transformer is 480V to 240V isolation transformers with delta wound primary and secondary windings. The primary windings offer 7 tap positions, 2 above and 4 below the nominal input voltage of 480V.

The primary side should be wired as follows:

| Input Voltage Range | Tap |
|---|---|
| 493-510 | 1 (504) |
| 481-492 | 2 (492) |
| 469-480 | 3 (480) |
| 457-468 | 4 (468) |
| 445-456 | 5 (456) |
| 433-444 | 6 (444) |
| 420-432 | 7 (432) |

This should produce a voltage on the secondary side of 234-243 V RMS L-L. Verify this and readjust the taps as required. At the machine, connect the cables at the input of the internal 230V transformer to the 227-243V taps. Apply power to the machine and verify that the DC voltage between pins 2 and 3 of the Vector Drive (2nd and 3rd pins from the left) is 329-345VDC. If not, return to the 480V isolation transformer and readjust the taps as required. Do not use the taps on the internal 230V transformer to adjust the voltage.

### 50Hz Installations

The external transformers are 60Hz rated, and cannot be used at 50Hz without derating the input voltage. For these applications, the internal 230V transformer should be tapped on the lowest setting (195-210V RMS). The external transformer should be tapped according to the following table. If these tap settings do not produce a DC bus voltage between pins 2 and 3 on the Vector Drive between 320 and 345VDC, readjust the taps on the external transformer as required. Do not move the taps on the internal transformer from the lowest position.

| Input Voltage Range | Tap |
|---|---|
| 423-440 | 1 (504) |
| 412-422 | 2 (492) |
| 401-411 | 3 (480) |
| 391-400 | 4 (468) |
| 381-390 | 5 (456) |
| 371-380 | 6 (444) |
| 355-370 | 7 (432) |

## Optional Chip Auger installation

1. Unpack the auger and discharge tube.

2. Slide the auger into the discharge tube opening and then slip opposite end onto motor hub. Fasten to motor hub with the 5/16-18 x 2½” bolt.

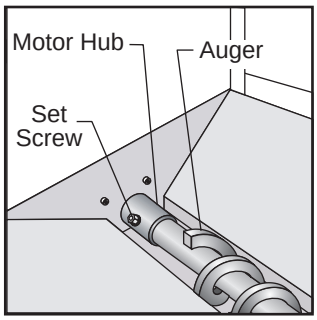


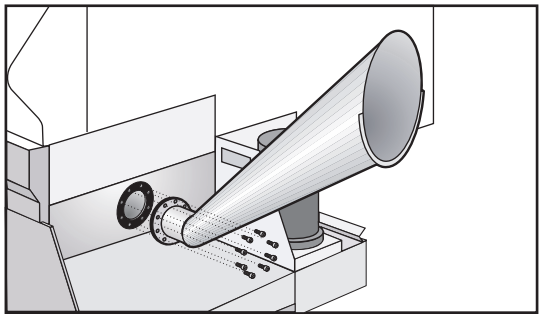

3. Install gasket and slide the discharge tube into the opening. Attach the discharge tube with bolts and locking washers and tighten uniformly.

4. After machine start-up, check the operation of the auger to ensure the direction of rotation will move the chips toward the discharge tube. If the auger is turning so that the chips are not being moved toward the discharge tube, change PARAM 209 bit 12 from 1 to 0 or 0 to 1 to establish a new forward direction.

## SL-10 Chip Auger Discharge Tube Installation

1. Remove the screws that secure the inner front and rear wings. Remove the inner front and rear wings. Slide the chip auger assembly towards the rear of the machine.

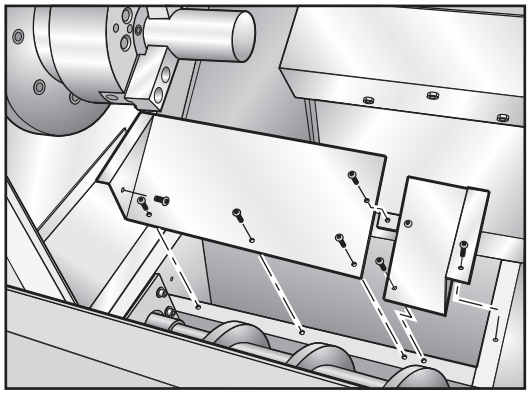

2. Unpack the discharge tube. Install gasket and slide the discharge tube into the opening. Attach the discharge tube with bolts and locking washers and tighten uniformly.

3. Slide the chip auger assembly back into its original location. Reinstall the inner front and rear wings using the BHCS removed in step 1.

4. After machine start-up, check the operation of the auger to ensure the direction of rotation will move the chips toward the discharge tube. If the auger is turning so that the chips are not being moved toward the discharge tube, change PARAM 209 bit 12 from 1 to 0 or 0 to 1 to establish a new forward direction.

## SL-10 Parts Basket

### Installation

Place the parts basket tray over the chip auger trough. Set the parts basket on the parts catcher tray. Position the basket underneath the chuck.

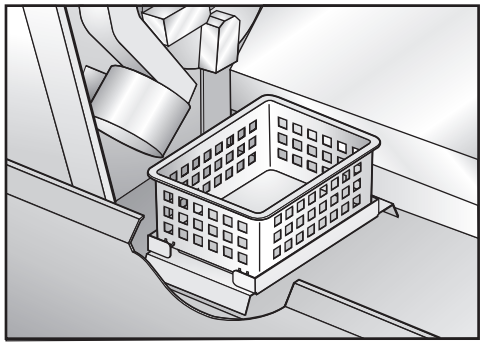

## Optional Chip Conveyor

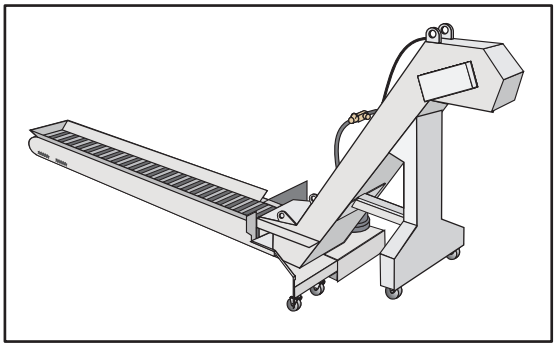

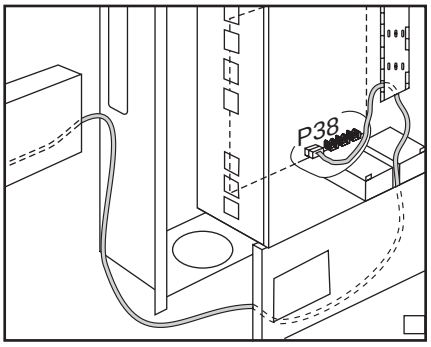


1. Unpack the chip conveyor and locate the conveyor discharge cover. Remove the side and nose wings from the conveyor pickup area.

2. Attach a lift to the hoist loops, raise the conveyor and reorient the caster wheels in the operating position.

3. Slide conveyor into opening on the right side of the machine until the incline start point is near the machine enclosure. Adjust caster wheels to support the conveyor 1/8” to1/4” above the lip of the enclosure pan.

4. Install the side and nose wings, and discharge cover.

5. Route the chip cable through the hole in the bottom of the control cabinet. Thread it in and back out of the central cable trough. Plug the connector to the I/O Board at input P38 and close the cabinet door.

**NOTE:** On a machine with a safety circuit, the chip conveyor will only run with the door closed regardless of the Conveyor Door Override bit.

## Foot Switch Installation

To connect the foot switch assembly, remove the retaining cover, plug in the foot switch, then replace the cover.

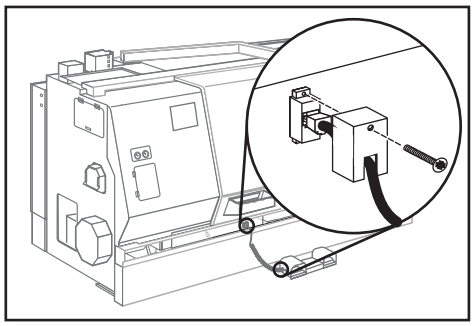

**NOTE:** A replacement foot switch cable (RJ12 6P6C Straight Wiring Coil Cord) is packed in the lathe’s control cabinet.

# Coolant System

## Coolant Tank

1. Position the coolant tank at the front of the machine. Connect the coolant pump and the auger cables to the connectors located on the control cabinet

2. The Coolant Level Float Assembly is shipped in a separate box. It consists of a housing, float and cable. Install the Coolant Level Float Assembly by lowering the float through the tank lid. Line up the slots in the housing with the dimples on the side of the tank and press down so the float assembly clips onto the tank.

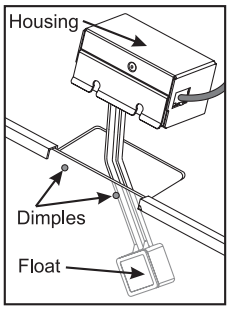


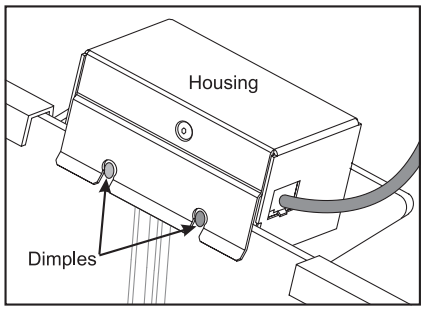


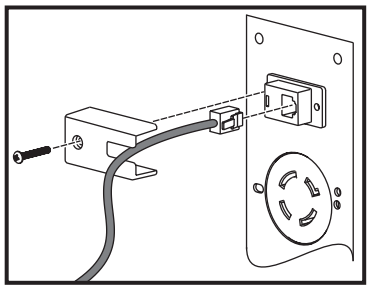

3. Insert a plastic push wire mount into the hole in the tank lid, then route the cable towards the right side of the lathe. Use the plastic push wire-mounts as needed to ensure the cable does not get damaged. Tie wrap the coolant float cable to other cables, when available, when routing from the coolant tank.

4. Connect the cable to the Coolant Level Gauge receptacle on the right side panel. Remove the cover from the RJ-12 style connector, plug in the coolant level sensor cable, and replace the cover.

5. Select the Current Commands screen on the operator's pendant and move the float up and down to ensure that the display reflects a corresponding change in the coolant level.

6. Attach the coolant hose to the pump fitting located at the base of the coolant pump.

7. Slide the coolant tank into place beneath the machine. Insure the cables and hoses are not damaged as the coolant tank is pushed in.

8. Fill the tank with the approximately 35 gallons of coolant (50 gallons for SL-30, 75 gallons for the SL-40). Fill with water based coolant only.*

***Mineral cutting oils will damage rubber based components throughout the machine and void the warranty.**

## SL-10 Coolant Pump

### Priming the Coolant Pump

After machine installation, or extended periods of non-use, add coolant to inlet side of the pump until full.

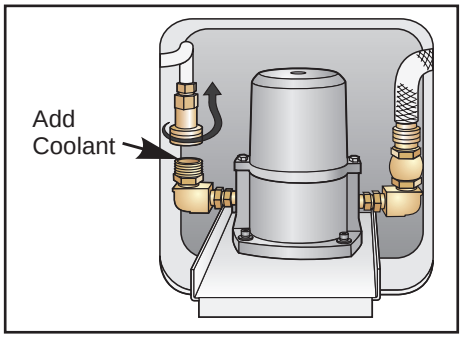

## Auxiliary Filter for Standard Coolant Systems

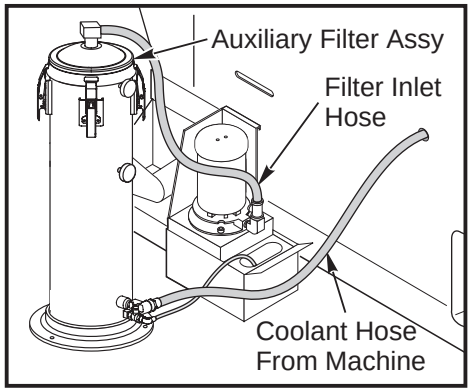


1. Place the Auxiliary Filter system next to the coolant tank of the machine. Connect the output of the Standard Coolant pump to the input of the Auxiliary Filter. Connect the Auxiliary Filter output hose to the coolant hose of the machine.

2. The Auxiliary Filter tank must be filled with coolant before use. To fill the Auxiliary Filter tank from the Standard Coolant tank, turn on the Standard Coolant Pump. Open the ball valve, located on the top of the Auxiliary Filter tank. Wait for coolant to appear in the drain-back hose. Close the ball valve; the Auxiliary Filter tank is full.

## Optional High Pressure Coolant System

### Installation

1. Connect the intake filter hose to the coolant pickup connection next to the coolant pump on the coolant tank.

2. Route the 1/4" OD plastic hose attached to the high pressure coolant pump down into the coolant tank. Insert it in to the 1/4" OD connector next to the coolant pickup. Route the 3/8" OD plastic hose from the bottom of the HPC unit to the 3/8" OD push-in elbow next to the coolant pump.

3. Attach the 1/2" braided hose to the standard coolant pump. Prime the high pressure coolant system.

4. Run the standard coolant pump and check all connections for leaks.

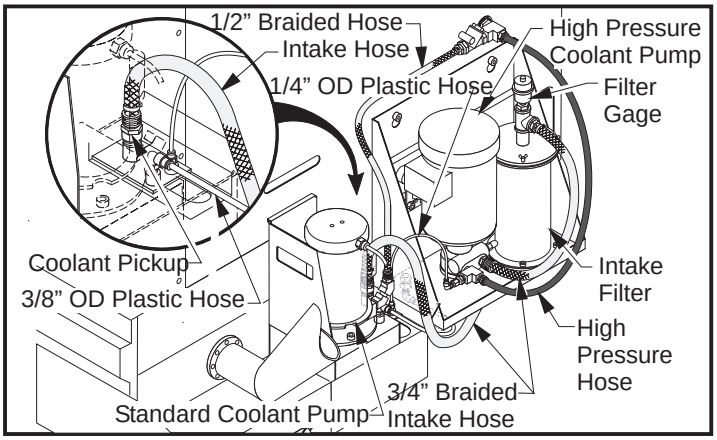


*Installed High Pressure Coolant System*

## Optional Auxiliary Filter for High Pressure Coolant

### Installation

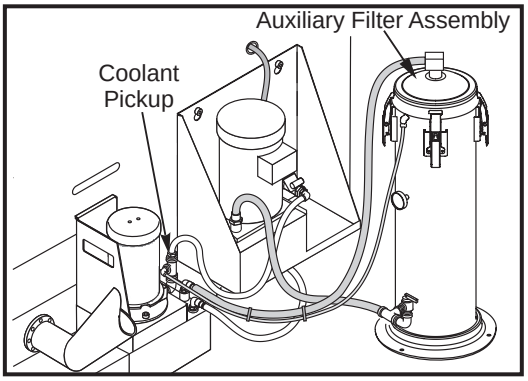


*Standard Filtration Setup*

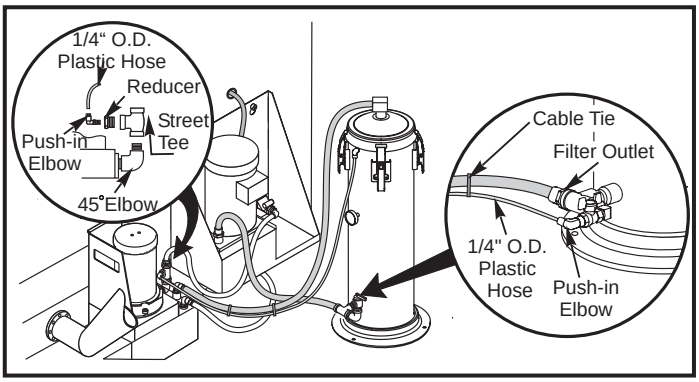


*Auxiliary Filter Priming System*

1. Attach the hose from the top of the auxiliary filter to the hose connector on the coolant pickup.

2. Disassemble the fittings on the primary coolant pump. Reassemble with two (2) 1/2” 45° fittings, a male to male 1/2” fitting, a cross fitting, and a 1/2” hose fitting on the other end of it. On one of the two remaining sides of the cross fitting, install a 1/2” to 1/4” reducer and a 1/4” push-in elbow. On the other side, install a 1/2” plug. (See Auxiliary Filter Priming System figure.) Note that the illustration shows the cross fitting rotated 90° ccw for clarity. The 1/4” push-in elbow should face the Auxiliary Filter.

3. Insert 1/4" OD plastic hose into the push-in elbow on the pump. Route the hose along the intake filter hose and around the intake line of the auxiliary filter. Trim the plastic hose to length and insert it into the push-in elbow at the top of the filter. Secure the plastic hose to the inlet hose with the supplied cable ties.

4. Attach the hose from the bottom of the auxiliary filter to the inlet of the high pressure pump.

5. Check that the filter lid is securely closed.

6. Run the primary coolant system for ten minutes to prime the auxiliary filter before using the high pressure system.

**NOTE:** The intake filter on high pressure coolant is not used when the auxiliary filter is installed.

## 1000 Psi High Pressure Coolant Installation

Place the 1000psi HPC assembly next to the standard coolant pump.

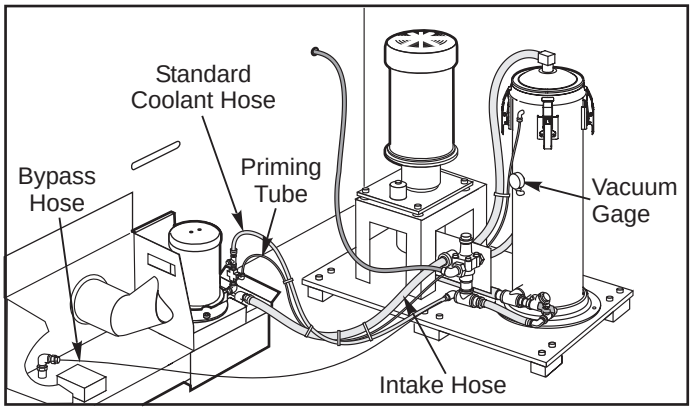

1. Connect the power cable for the pump assembly to an external source in order to power the motor. Note that the CNC control does not provide power to the pump motor. Customer supplied external power must be supplied at the time of installation. Power required is 208-230 volt 3-phase 50/60Hz, protected by a 20-amp circuit breaker. The pump assembly is pre-wired with a NEMA L15-20 plug.

The pump assembly can also use an **alternate power source**, these are: 240-230V 50/60HZ @ 20A or 480V 50/60HZ @ 10A

To power the pump assembly from an alternate source, first replace the plug at the end of the cable with an appropriate plug for the voltage being used. Then, rewire the pump motor according to the directions on the side of the motor.

2. Connect the 1" diameter intake hose from the HPC pump to the cover plate assembly on the coolant pump mount. Connect the 1/2" diameter bypass hose from the pressure regulator to the coolant tank.

3. Insert the 1/4" diameter nylon tubing from the HPC pump to the connector on the standard coolant pump.

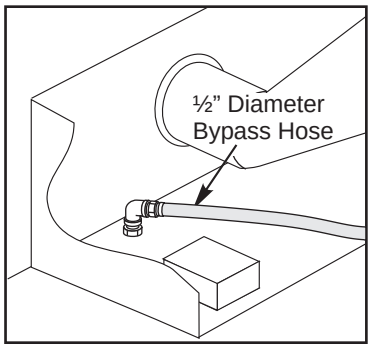


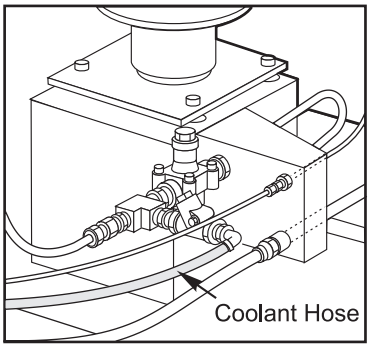


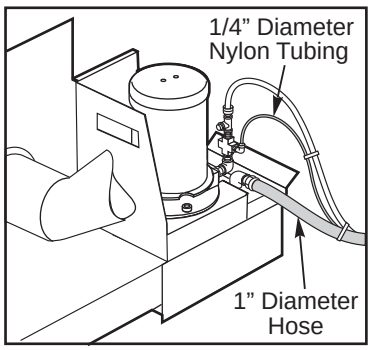


## Initial Start-Up

**Ensure that a correct style tool is in place; a tool and tooling block with coolant passages.**
Before using the 1000psi system the auxiliary filter must be primed. Run the standard coolant pump for 5 minutes, this will fill the auxiliary tank, through the priming hose.

To reduce wear and prolong the life of the auxiliary filter, the 1/4" nylon hose is connected between the standard coolant pump and the auxiliary filter which will maintain the coolant level in the filter tank.

## Pressure Regulator Adjustment

The pressure regulator has been set at 1000psi and tested at the factory. No further adjustment is required. However, to change the pressure, loosen the regulator jam nut. Turn the adjusting bolt clockwise to increase the pressure or counter clockwise to decrease the pressure. (Note, the system does not need to be on to change pressure) Tighten the regulator nut once the pressure has been set.

## Optional Auxiliary Filter for HPC System

### Installation

1. Hang the auxiliary filter assembly from the coolant tank handle and secure it with two 1/4-20 screws as shown.

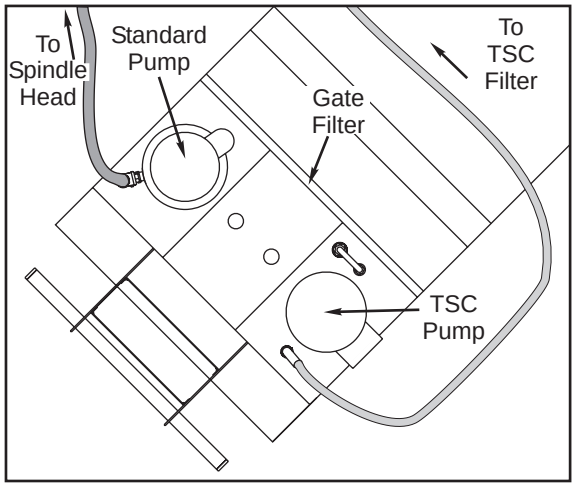


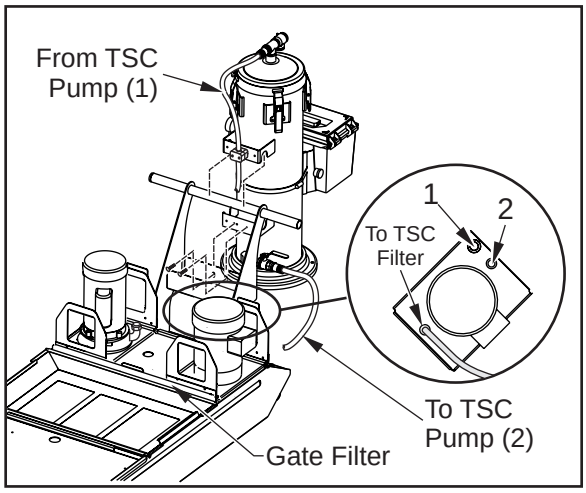


*Standard Filtration Setup*

2. Connect the hose attached to the spindle head to the hose connection on the Standard Coolant Pump.

3. Separate the hoses coming from the Auxiliary Filter. They have been connected together for shipping.

4. Attach the Auxiliary Filter male connector (top hose) to female connector on the HPC Coolant Pump Assembly (Items labeled “1” in the previous illustration).

5. Attach the Auxiliary Filter female connector (bottom hose) to the short hose with the male connector on the HPC Coolant Pump Assembly (Items labeled “2” in the previous illustration).

6. Connect the plastic tubing (shipped tied to the Auxiliary Filter) from the small elbow fitting on the top of the Auxiliary Filter to the small elbow fitting on the Standard Coolant Pump hose connector.

7. Connect the hose attached to the HPC Coolant Pump Assembly to the HPC Filter Assembly.

8. Make sure the filter lid is securely closed.

9. Run the primary coolant system for ten minutes to prime the bag filter housing before using the HPC system.

## 1000 PSI High-Pressure Coolant Installation

Place the 1000psi HPC assembly next to the coolant tank behind the machine with the hose connections facing the back of the machine. Use the following coolant schematic as an aid for hose routing.

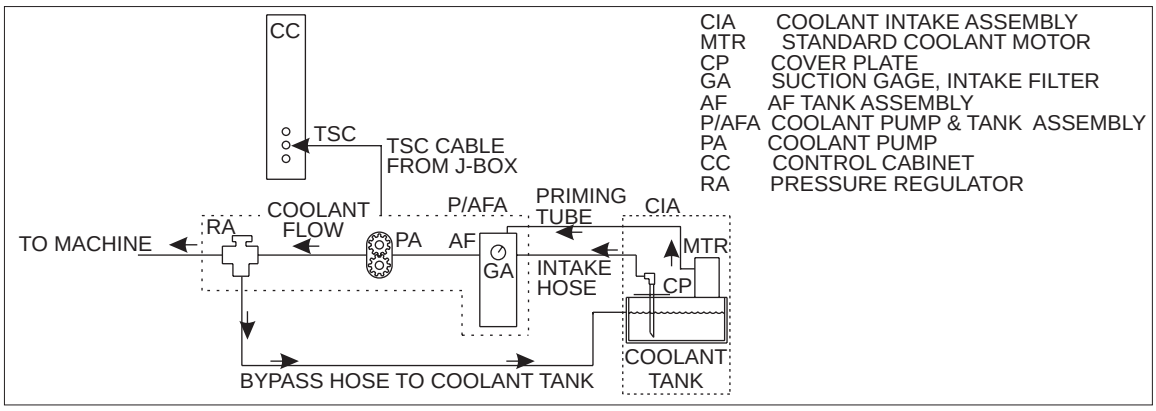


1. Connect the power cable for the pump assembly to an external source in order to power the motor. Note that the CNC control does not provide power to the pump motor. Customer supplied external power must be supplied at the time of installation. The power required is 208-230 volt 3-phase 50/60Hz, and have a 20-amp circuit breaker. The pump assembly is pre-wired with a NEMA L15-20 plug.

The pump assembly can also use an alternate power source, these are:
240-230V 50/60HZ @ 20A or 480V 50/60HZ @ 10A

To power the pump assembly from an alternate source, first replace the plug at the end of the cable with an appropriate plug for the voltage being used. Then, rewire the pump motor according to the directions on the side of the motor.

2. Plug the HPC cable from HPC junction box (J-box) to the HPC amphenol port on the side of the control cabinet.

3. Connect the hose attached to the coolant connection on the spindle head to the hose connection on the Standard Coolant Pump.

4. Connect the hose attached to the HPC input on the machine's head to the connector labeled "1000 psi Out" on the HPC1000 connector panel (located on the side opposite the handle).

5. Attach the supply hose from the coolant tank lid to the connector labeled "Supply In" on the HPC1000 connector panel (items labeled "1" in the following illustration).

6. Connect the filter drain line from the coolant tank lid to the connector labeled "Filter Drain" on the HPC1000 connector panel (items labeled "2" in the following illustration).

7. Connect the plastic tubing (ships tied to the Auxiliary Filter) from the connector labeled "Prime Line" on the HPC1000 connector panel to the small elbow fitting on the Standard Coolant Pump hose connector (items labeled "3" in the following illustration).

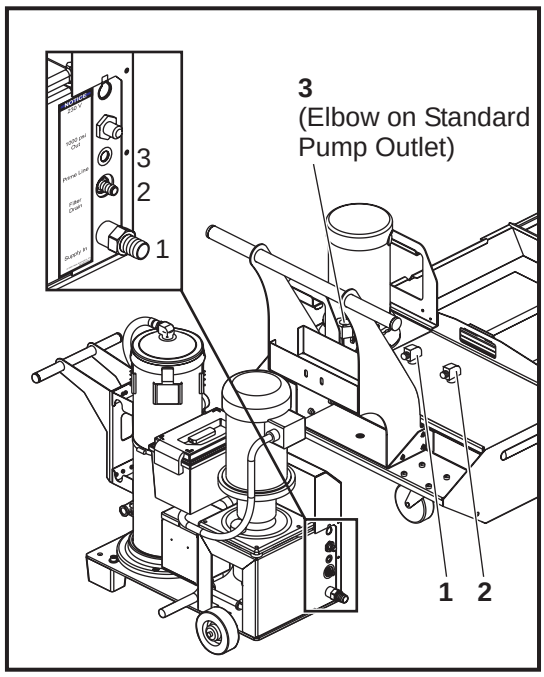


*TSC1000 / HPC1000 Setup*

## Initial Start-Up

Before using the 1000psi system the auxiliary filter must be primed. There are two ways to do this. The first is to run the standard coolant pump for 5 minutes. This will fill the auxiliary tank, through the priming hose.

The second method is to attach the wash down hose to the standard coolant pump. Turn on the standard coolant system (press “MDI”, then “Coolant”). It may be necessary to turn the valve(s) on the standard coolant pump to divert coolant to the hose. Open the auxiliary filter tank cover and use the wash down hose to fill the auxiliary filter with coolant. Replace the auxiliary tank cover and tighten securely.

**NOTE:** To ensure the HPC pump does not lose its priming, a 1/4” nylon hose is connected between the standard coolant pump and the auxiliary filter to maintain the coolant level in the filter tank.Pressure Regulator Adjustment

## Machine Power On

**WARNING!**

**DO NOT press POWER UP/RESTART on the control panel while the shipping bracket is in place.**

With the main switch on the electrical panel set to ON, press and release POWER ON at the upper left of the control panel. After a few seconds, the display will appear on the screen.

## Hydraulic Unit Phasing

**The machine must be phased properly.** Improper phasing will cause damage to the hydraulic unit and void the warranty.

1. Press and release the RESET button twice (or until all alarms are cancelled) to turn the axis motors on. (The message “ALARM” appears at the lower right of the screen if one or more alarms are in effect.)

**NOTE:** The hydraulic pump runs whenever the axis motors are energized.

2. Check the pump pressure gauge on the hydraulic unit. The hydraulic pump is located on the left side of the lathe. If the pressure reads zero, immediately power off the machine.

**CAUTION!** If the hydraulic pump is allowed to run for more than 30 seconds in this condition, serious damage will occur.

When pressure reads zero, it means the machine is not properly phased, and the pump is rotating backward. If the pressure gauge shows a proper pressure, the phasing is correct, and no further action is required.

3. To properly phase the machine:
   - Make sure there is no power at the input side (top) of the main circuit breaker.
     MEASURE THE VOLTAGE!
   - Exchange any two wires at the input side (top) of the main circuit breaker
   - Close the control box.
   - Return to Step 1 and retest for proper phasing.

## Removing Shipping and Lifting Brackets

All brackets (shipping and lifting) must be removed before operating the machine. Use the following instructions and photographs to located each bracket and remove.

The order of removal is:

1. Remove rear lifting bracket and spindle shipping bracket.

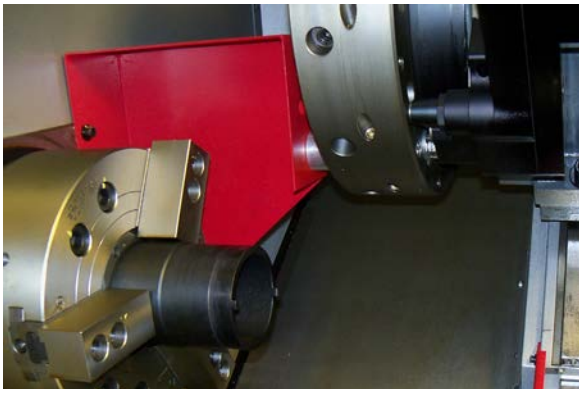

2. Remove the Y-Axis shipping bracket (Y-axis lathes only).

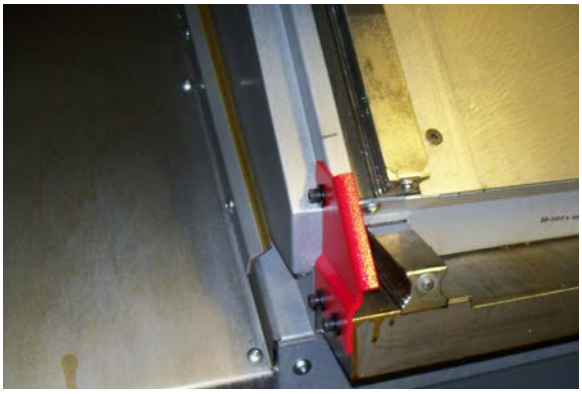

3. Power up the machine and home Z-Axis only.
4. Remove left end lift bracket and front lifting shackle.

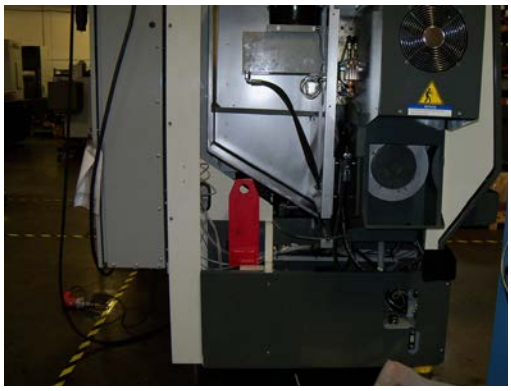

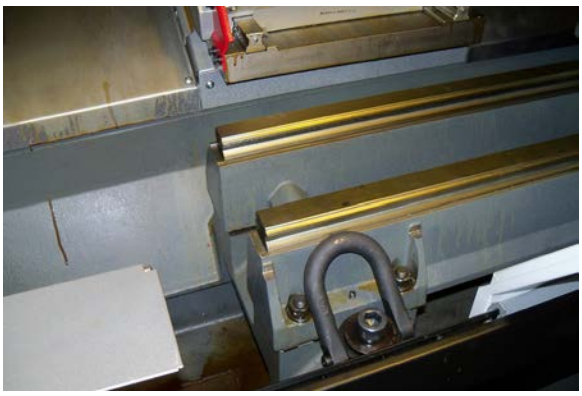

5. Press the Reset button twice, or until there are no alarms. The message “Alarm” appears at the lower right of the screen if the machine has an alarm.

**NOTE:** If any alarms are present and cannot be cleared with the Reset button, press the ALARM/MESGS for more information on the alarms. If you are unable to clear the alarms, write down the alarm numbers and call the factory.

6. Close the door and press and release the Zero Return button followed by the Auto All Axes button.

## Optional Tool Probe

The Tool Probe is secured in place for shipping with a cable tie. Before operating the turning center, cut the cable tie. Remove screw holding cable clamp in place, remove cable clamp and re-install the screw.

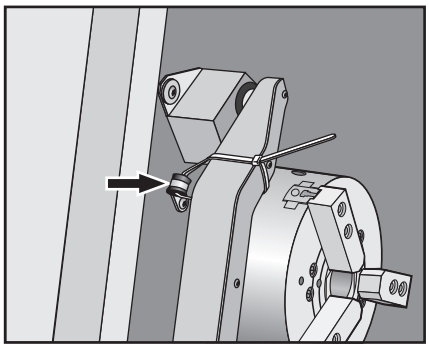

## SL-10 Leveling

1. Remove all weight from the right-front (RF) leveling screw. Place a machinist’s level on the leveling tool as shown. If the lathe has a VDI turret, install a VDI tool holder and clamp the leveling tool in the tool holder. Then place a machinist’s level on the leveling tool. Use the remaining 3 leveling screws to put the machine base within the measuring range of the level.

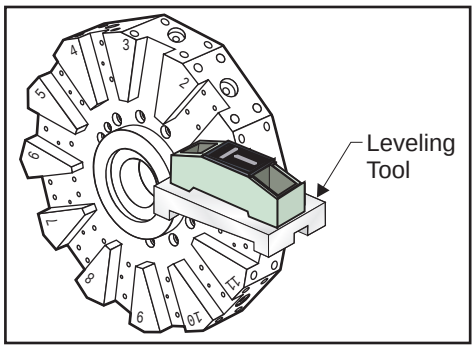


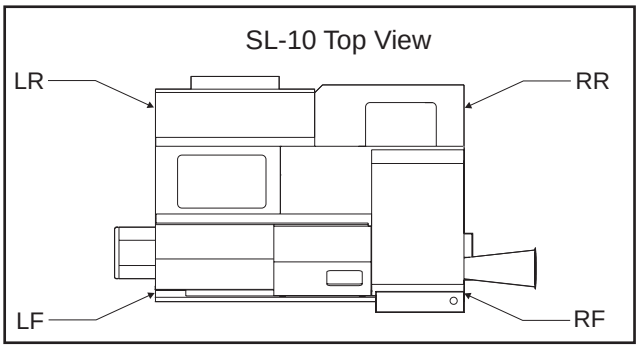


*Leveling Screw Terms and Locations*

2. Jog the Z-axis back and forth and adjust the pressure on the RF screw to remove roll from the Z-axis. Maximum acceptable roll deviation is 0.0005”/10 throughout the entire Z-axis travel.

## Crane Arm Installation Instructions for SL-30 and SL-40

1. Remove crane arm from the shipping base.

2. Slide the Top Flange Bearing onto the shaft of the boom with the flange facing the bearing stop. Slide the Lower Bearing onto the shaft and fasten in place with the Ø.38” pin.

3. Lift crane arm into position over crane pivot weldment. There is a hole in the boom especially for lifting.

4. Lower the crane arm into place inside the crane pivot weldment.

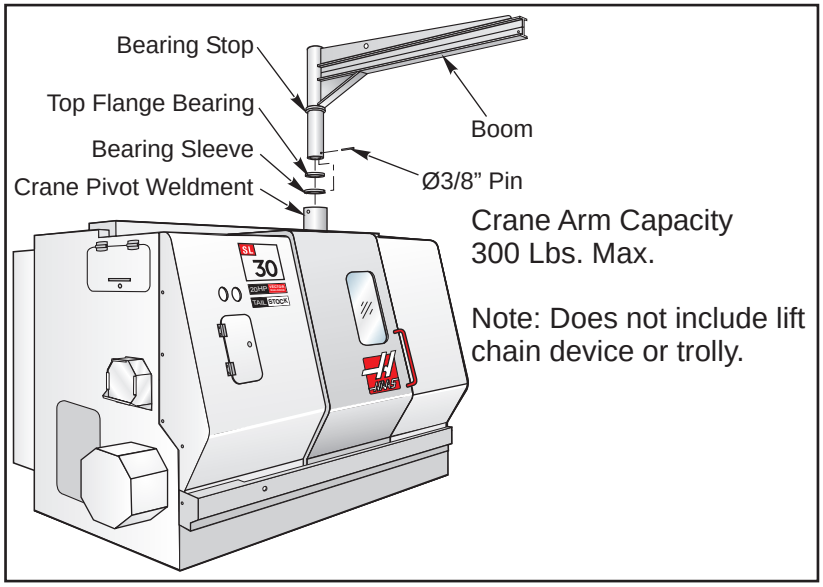


## Cable Handling/Storage

Complete the machine installation by looping and storing the extra lengths of electrical cables. Use the following techniques when dealing with excessive cable length.

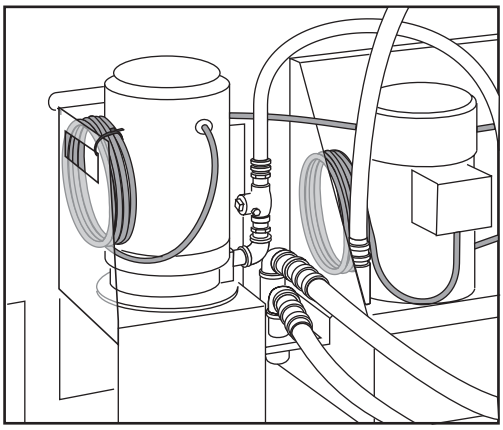

- Loop cables individually, being careful to not force the cable into too sharp a bend and tie-wrap the loop. The cable bend radius should not be less than 4 times the diameter of the cable.
- Place the loop in the cable out of sight, hidden by the machine sheet metal, if possible.
- Do NOT allow the cables to rest on the floor.
- Do NOT coil a cable around another piece of machinery (such as a pump motor).