Indexer Layout Drawing	HA5C3-T	Installation Dimensions	Page 1 of 1 11/9/2021

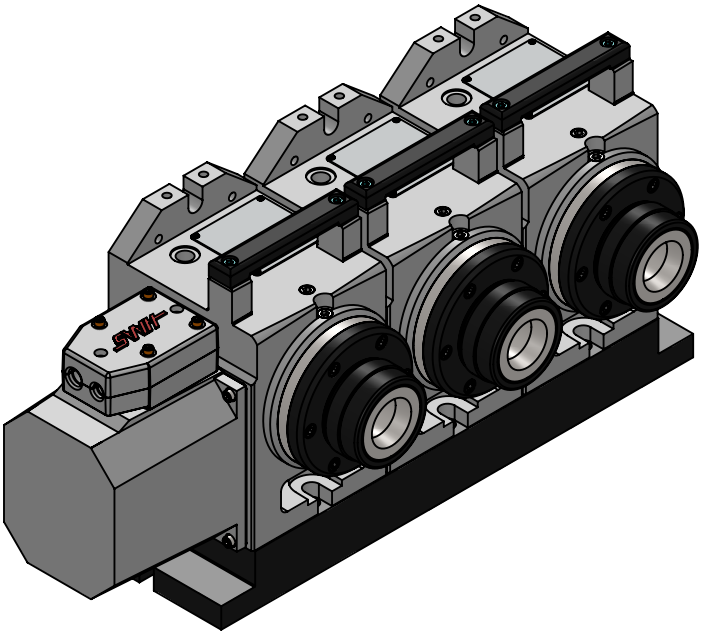

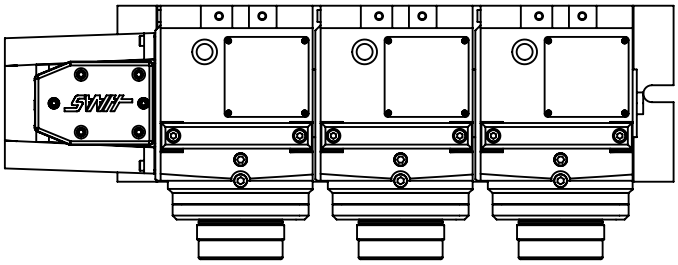

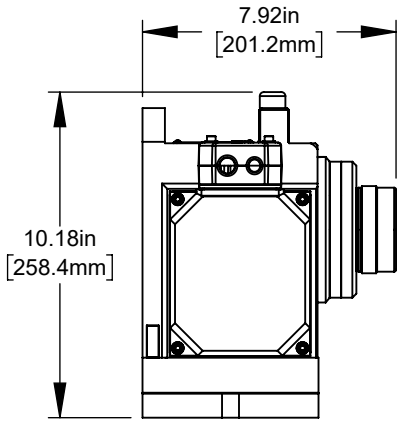

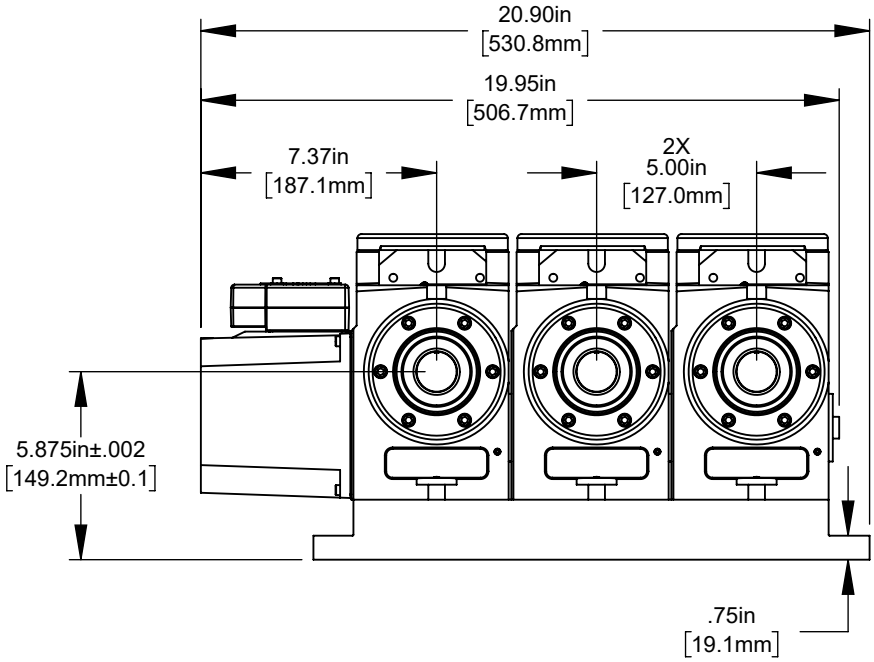

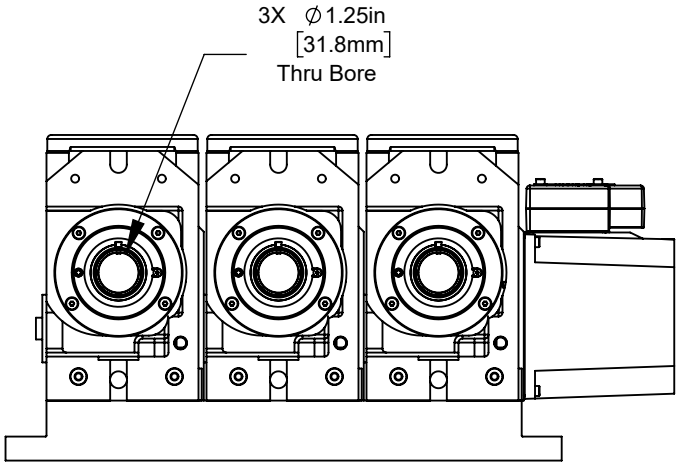

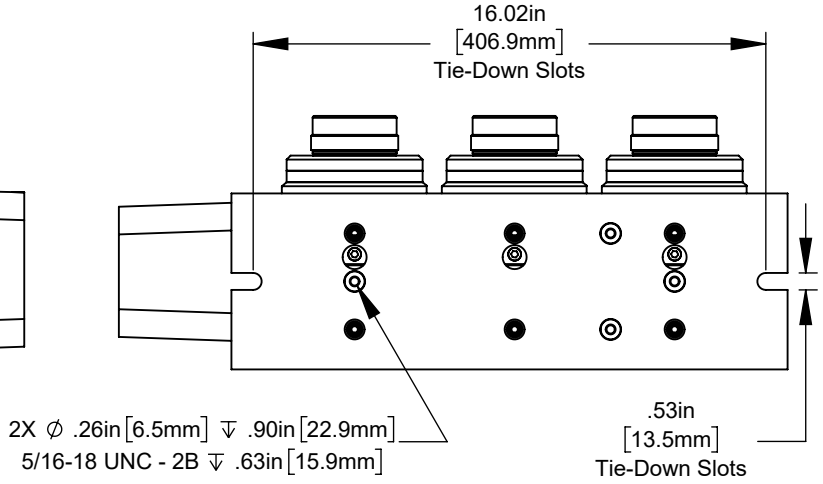

All dimensions based on stackup of sheetmetal, subject to variation of 1/2" (13 mm) Due to continual product improvements, dimensions are subject to change without notice