Indexer Layout Drawing	T5C2	Installation Dimensions	Page 1 / 1 12/1/2021

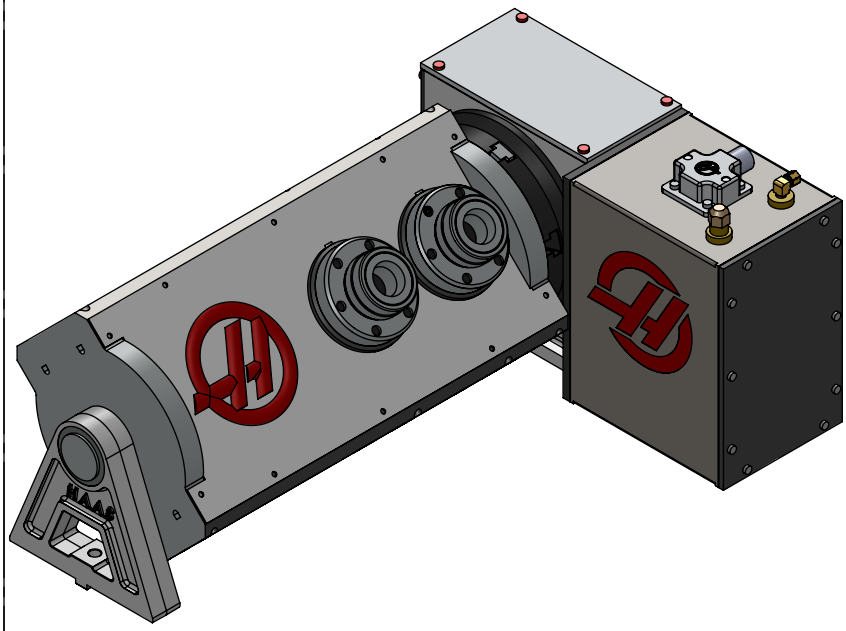

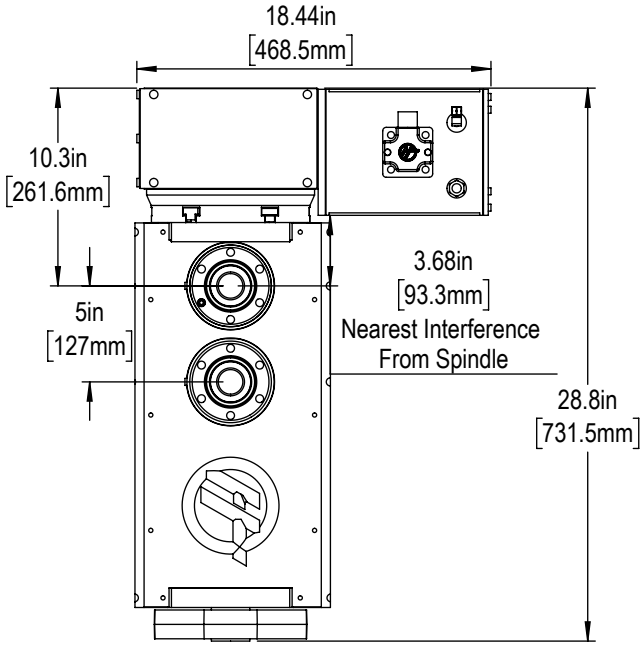

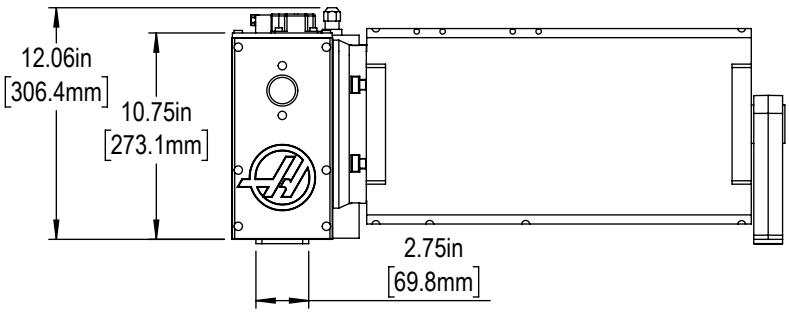

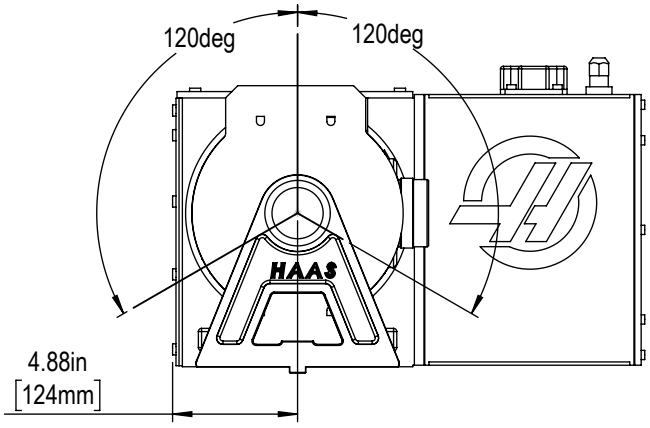

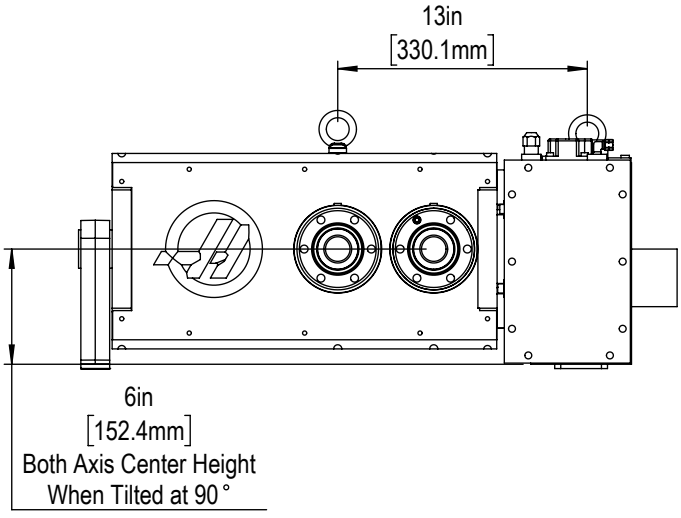

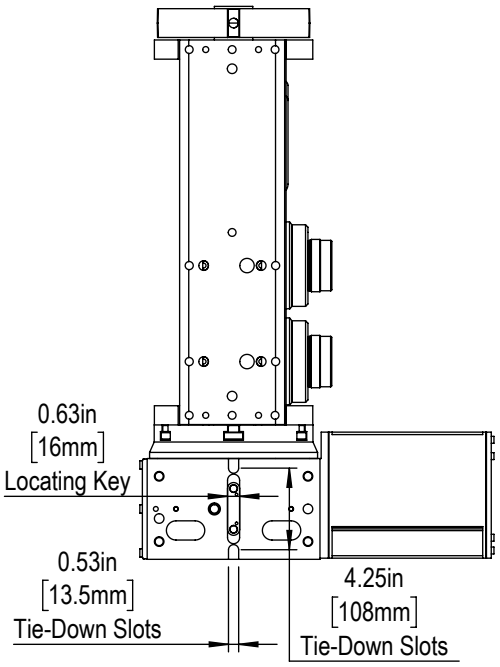

All dimensions based on stackup of sheetmetal, subject to variation of 1/2" (13 mm) Due to continual product improvements, dimensions are subject to change without notice